NATIONAL AERONAUTICS AND SPACE ADMINISTRATION

NASA CR-
144625

(NASA-CR-144625) TERMINAL AREA ENERGY
MANAGEMENT REGIME INVESTIGATIONS UTILIZING
AN 0.030-SCALE MODEL (47-0) OF THE SPACE
SHUTTLE VEHICLE ORBITER CONFIGURATION
140A/B/C/R IN THE AMES RESEARCH CENTER 11 X G3/16

N76-30267
HC $18.75

Unclas
49189

SPACE SHUTTLE

SEP 1976
RECEIVED
NASA STI FACILITY
INPUT BRANCH

AEROTHERMODYNAMIC DATA REPORT

JOHNSON SPACE CENTER

HOUSTON, TEXAS

DATA MANagement services
SPACE DIVISION CHRYSLER CORPORATION

July 1976

DMS-DR-2254
NASA CR-144,625
VOLUME 7 OF 13

TERMINAL AREA ENERGY MANAGEMENT REGIME INVESTIGATIONS UTILIZING AN 0.030-SCALE MODEL (47-0) OF THE SPACE SHUTTLE VEHICLE ORBITER CONFIGURATION 140A/B/C/R IN THE AMES RESEARCH CENTER 11 X 11 FOOT TRANSONIC WIND TUNNEL (OA148)

by

P. J. Hawthorne
Rockwell International Space Division

Prepared under NASA Contract Number NAS9-13247

by

Data Management Services
Chrysler Corporation Space Division
New Orleans, La. 70189

for

Engineering Analysis Division

Johnson Space Center
National Aeronautics and Space Administration
Houston, Texas

WIND TUNNEL TEST SPECIFICS:

Test Number: ARC 11-073
NASA Series Number: 0A148
Model Number: 47-0
Test Dates: May 5 through May 17, 1975
Occupancy Hours: 220

FACILITY COORDINATOR:

Stuart L. Treon
Mail Stop 227-5
Ames Research Center
Moffett Field, Calif. 94035

Phone: (415) 922-5850

AERODYNAMICS ANALYSIS ENGINEERS:

S. Kraus
J. H. Reichert
Rockwell International
Space Division
12214 Lakewood Blvd.
Mail Code AC07
Downey, Calif. 90241

Phone: (213) 922-4831

PROJECT ENGINEERS:

P. J. Hawthorne
J. Marroquin
M. D. Milam
Rockwell International
Space Division
12214 Lakewood Blvd.
Mail Code AD38
Downey, Calif. 90241

Phone: (213) 922-3785

R. E. Ellington
J. J. Brownson
Ames Research Center
Mail Stop 227-5
Moffett Field, Calif. 94035

Phone: (415) 965-6262

DATA MANAGEMENT SERVICES:

Prepared by: Liaison--D. A. Sarver
Operations--W. B. Meinders

Reviewed by: D. E. Poucher

Approved: J. L. Glynn, Manager
Data Operations

Concurrence: N. D. Kemp, Manager
Data Management Services

Chrysler Corporation Space Division assumes no responsibility for the data presented other than display characteristics.

TERMINAL AREA ENERGY MANAGEMENT
REGIME INVESTIGATIONS UTILIZING AN 0.030-SCALE
MODEL (47-0) OF THE SPACE SHUTTLE VEHICLE
ORBITER CONFIGURATION 140A/B/C/R IN THE
AMES RESEARCH CENTER 11 x 11 FOOT
TRANSONIC WIND TUNNEL (OA148)

by

P. J. Hawthorne, Rockwell International Space Division

ABSTRACT

This report documents data obtained in wind tunnel test OA148. The objectives of the test series were to:

1) obtain pressure distributions, forces and moments over the vehicle 5 Orbiter in the terminal area energy management (TAEM) and approach phases of flight.

2) obtain elevon and rudder hinge moments in the TAEM and approach phases of flight.

3) obtain body flap and elevon loads for verification of loads balancing with integrated pressure distributions.

4) obtain pressure distributions near the short OMS pods in the high subsonic, transonic and low supersonic Mach number regimes.

Testing was conducted over a Mach number range from 0.6 to 1.4 with Reynolds number variations from 4.57 x 10^6 to 2.74 x 10^6 per foot. Model angle-of-attack was varied from -4 to 16 degrees and angles of side slip ranged from -8 to 8 degrees.

TABLE OF CONTENTS

Page

ABSTRACT iii

INDEX OF MODEL FIGURES 2

INDEX OF DATA FIGURES 3

NOMENCLATURE 5

REMARKS 9

CONFIGURATIONS INVESTIGATED 10

TEST FACILITY DESCRIPTION 12

DATA REDUCTION 13

REFERENCES 26

TABLES

I. TEST CONDITIONS 27

II. DATA SET RUN NUMBER COLLATION SUMMARY 28

III. MODEL DIMENSIONAL DATA 34

IV. FUSELAGE PRESSURE TAP LOCATIONS 44

V. LEFT WING PRESSURE TAP LOCATIONS 46

VI. ORBITER VERTICAL TAIL AND SPEED BRAKE PRESSURE TAP LOCATIONS 48

VII. BODY FLAP PRESSURE TAP LOCATIONS 49

FIGURES

MODEL 50

DATA 63

APPENDIX

TABULATED SOURCE DATA 63

INDEX OF MODEL FIGURES

Figures Title Page

1. Axis ~~systems and~~ sign conventions.

a. Orbiter Axis Systems 50
b. Definition of Angular Measurements 51
c. Elevon Hinge Moment Sign Convention 52

2. Model sketches.

a. Configuration - 140A/B/C/R 53
b. Base Pressure Taps and Areas 54
c. Fuselage, Vertical Tail, and Wing Pressure Tap Locations 55

3. Model installation photographs.

a. Three-Quarter Front View of Model 47-0 in the ARC 11 x 11 ~~Foot~~ UPWT 60
b. Three-Quarter Rear View of Model 47-0 in the ARC 11 x 11 Foot UPWT 61

INDEX OF DATA FIGURES

FIGURE NUMBER	TITLE	CONDITIONS VARYING	PLOTTED COEFFICIENTS SCHEDULE	PAGES
VOLUME 1				
4	VARIATION OF LATERAL DIRECTIONAL AERODYNAMIC CHARACTERISTICS WITH BETA	ALPHA,MACH,BDFLAP, SPDBRK,ELVN-L,ELVN-R, RUDDER	A	1-252
5	VARIATION OF LONGITUDINAL AERODYNAMIC CHARACTERISTICS WITH ALPHA	BETA,MACH,BDFLAP,SPDBRK, ELVN-L,ELVN-R,RUDDER	B	253-507
6	VARIATION OF HINGE MOMENT CHARACTERISTICS WITH ALPHA	BETA,MACH,BDFLAP,SPDBRK, ELVN-L,ELVN-R,RUDDER	C	508-762
VOLUME 2				
7	ORBITER FUSELAGE BODY FLAP DEFLECTION 0 DEGREES	ALPHA, MACH PHI, BETA	D	763-864
8	ORBITER FUSELAGE BODY FLAP DEFLECTION 16.3 DEGREES	ALPHA, MACH PHI, BETA	D	865-966
9	LEFT WING BOTTOM SURFACE ELEVON DEFLECTION 0 DEGREES	ALPHA, MACH 2Y/BW, BETA	E	967-1051
10	LEFT WING BOTTOM SURFACE ELEVON DEFLECTION 10 DEGREES	ALPHA, MACH 2Y/BW, BETA	E	1052-1136
11	LEFT WING TOP SURFACE ELEVON DEFLECTION 0 DEGREES	ALPHA, MACH 2Y/BW, BETA	E	1137-1221
12	LEFT WING TOP SURFACE ELEVON DEFLECTION 10 DEGREES	ALPHA, MACH 2Y/BW, BETA	E	1222-1306
13	VERTICAL TAIL SPEEDBRAKE DEFLECTION 0 DEGREES	ALPHA, MACH Z/BV, BETA	F	1307-1374

INDEX OF DATA FIGURES (Concluded)

FIGURE NUMBER	TITLE	CONDITIONS VARYING	PLOTTED COEFFICIENTS SCHEDULE	PAGES
14	VERTICAL TAIL SPEEDBRAKE DEFLECTION 35 DEGREES	ALPHA, MACH Z/BV, BETA	F	1375-1442

PLOTTED COEFFICIENTS SCHEDULE:

A) CY, CYN and CBL versus BETA
B) CN, CA and CLM versus ALPHA
C) CHEO, CHEI, CHETOT and CHBF versus ALPHA
D) CP versus X/LB
E) CP versus X/CW
F) CP versus X/CV

NOMENCLATURE

Symbol	Plot Symbol	Definition
A_b	AB	total Orbiter base area, ft^2
A_i	Ai	area over which P_i acts, ft^2
A_{sb}	ASB	speed brake base area, ft^2
b	BREF, BW	Orbiter wing span, in
b_v	BV	vertical tail reference span, in
C_{A_u}	CAU	Orbiter uncorrected axial force coefficient
C_A	CA	Orbiter axial force coefficient with sting cavity adjusted to average base pressure
C_{A_F}	CAF	Orbiter ~~fore~~body axial force coefficient.
$C_{A_{sc}}$	CASC	Orbiter sting cavity axial force coefficient.
C_{D_U}	CDU	Orbiter uncorrected drag coefficient
$C_{h_{bf}}$	CHBF	body flap hinge moment coefficient, about hinge line $X_o = 1532.0$
$C_{h_{ei}}$	CHEI	inner elevon hinge moment coefficient, about hinge line $X_o = 1387.0$
$C_{h_{eo}}$	CHEO	outer elevon hinge moment coefficient, about hinge line $X_o = 1387.0$
$C_{H_{e_{TOT}}}$	CHETOT	total right elevon hinge moment coefficient
C_{L_U}	CLU	Orbiter uncorrected lift coefficient
C_ℓ	CBL	Orbiter rolling moment coefficient, body axis system

NOMENCLATURE (Continued)

Symbol	Plot Symbol	Definition
C_m	CLM	Orbiter pitching moment coefficient with sting cavity adjusted to average base pressure, referenced to Orbiter MRC.
C_{m_u}	CLMU	Orbiter uncorrected pitching moment coefficient
C_{m_F}	CLMF	Orbiter forebody pitching moment coefficient referenced to orbiter MRC.
$C_{m_{sc}}$	CLMSC	Orbiter sting cavity pitching moment coefficient, referenced to Orbiter MRC
C_{N_u}	CNU	Orbiter uncorrected normal force coefficient
C_N	CN	Orbiter normal force coefficient with sting cavity adjusted to average base pressure
C_{N_F}	CNF	Orbiter forebody normal force coefficient
$C_{N_{sc}}$	CNSC	Orbiter sting cavity normal force coefficient
C_n	CYN	Orbiter yawing moment coefficient, body axis system
C_{pi}	CPi	surface tap pressure coefficient, port i, $(P_i - P_\infty)/q$
C_Y	CY	Orbiter side force coefficient
$C_{[X][Y]}$	C[X][Y]	base area force and moment coefficients. The first subscript (post fix) designates the type of coefficient, the second the pressure tap and it's associated area. The symbolic vectors [X] and [Y] are defined below.

[X]=

A	A	axial force
N	N	normal force
Y	Y	side force
m	LM	pitching moment
n	YN	yawing moment
ℓ	BL	rolling moment

NOMENCLATURE (Continued)

Symbol	Plot Symbol	Definition
[Y]=		
1,2,3	1,2,3	areas associated with pressure taps
4,5,6	4,5,6	1 through 6 see figure 2b
sc	SC	sting cavity area
bf	BF	upper body flap area
l_b	LB	Orbiter reference body length, IML nose to X_o = 1528.3, in.
ℓ_{REF}	LREF	longitudinal reference length, Orbiter mean aerodynamic chord, in
	LU/DU	uncorrected lift to drag ratio, CLU/CDU
M	MACH	freestream Mach number
Φ	PHI	angular cylindrical coordinate position around Orbiter body - deg.
P_i	Pi	pressure at surface tap i, PSF
P_∞	P	freestream static pressure, PSF
P_t	PT	freestream total pressure, PSF
q	Q	freestream dynamic pressure, PSF
	RN/L	unit Reynolds number, million per foot
S	SREF	wing reference area, ft^2
T_t	TTR	freestream total temperature, °R
X_{cp}	XCP/L	center of pressure location referred to l_b
X_o/L_o	X/LB	longitudinal location of body surface, fraction of body length

NOMENCLATURE (Concluded)

Symbol	Plot Symbol	Definition
X/C	X/CW	chordwise location on wing surface, fraction of local chord
X/C_v	X/CV	chordwise location on vertical tail, fraction of local chord
η_v	Z/BV	spanwise location on vertical tail, fraction of vertical tail span
η	2Y/BW	spanwise location on wing, fraction of semi span
X_{mrp}	XMRP	longitudinal location of moment reference point
XT	XT	longitudinal moment transfer distance from Orbiter balance center to Orbiter MRC, in
Y_{mrp}	YMRP	lateral location of moment reference point
Z_T	ZT	vertical moment transfer distance from Orbiter balance center to Orbiter MRC, in
α	ALPHA	angle of attack, degrees
β	BETA	angle of sideslip, degrees
δ_{bf}	BDFLAP	body flap deflection, degrees
δ_{eL}	ELVN-L, L-ELVN	left elevon deflection, degrees
δ_{eR}	ELVN-R, R-ELVN	right elevon deflection, degrees
δ_r	RUDDER	rudder deflection, degrees
δ_{sb}	SPDBRK	speed brake deflection, degrees
Z_{mrp}	ZMRP	vertical location of moment reference point
	$$	mask character used to indicate all possible values for this test 01 through 85

REMARKS

During the course of the test it was necessary to replumb the scanivalves. The resultant time loss necessitated deleting the priority 4 runs which incorporated the use of the metric vertical tail.

Data obtained from pressure taps 184, 296 and 347 are suspect due to slow leaks noticed while leak checking individual model pressure taps.

Body flap hinge moment data for datasets RE8001 through RE8005 have a -15% drift while datasets RE8006 and RE8007 have a +10% drift due to data recording system errors. System checks during the remainder of the test indicate a system error of less than 4% for body flap hinge moment data.

Rolling moment data has an approximate -.003 bias [illegible] coefficient. The reason for this was not determined, but possible sources are fabrication tolerances and/or differential stiffness of the left and right elevon panels.

Distortion of the instrumented elevon shaft appears to have occurred around run 310 due to model assembly difficulties and the maximum loads encountered at these test conditions. A comparison of measured elevon deflection before and after the test with the nominal setting is presented below:

Elevon Panel	Nominal	Pre-Test	Post-Test
Inboard right	-10	-9° 36'	-8° 55'
	-4	-3° 34'	-2° 55'
	0	+0° 10'	+1° 02'
	4	+4° 26'	+4° 28'
	10	+10°32'	+10°39'
Outboard right	-10	-9° 36'	-8° 15'
	-4	-3° 34'	-2° 20'
	0	+0° 10' *	+1° 05'
	4	+4° 26'	+3° 59'
	10	+10°32'	+10°18'

* Inboard only was measured but was the same as outboard panel(see Ref 2)

CONFIGURATION INVESTIGATED

The Rockwell International model 47-0 Space Shuttle Orbiter Vehicle was utilized in this test series. The model was originially constructed to -140A/B lines, but was modified prior to this test with the addition of the -140C OMS pods, six inch bevelled interpanel elevon gaps and uncovered RCS forward thrustor parts. To denote these additions, the additional designations "C" (for -140C OMS pods) and "R" (for RCS thrustors) were added, and the slashes deleted for convenience on Table II (designated "-140 ABCR").

In data sets RE8069 to 085 the RCS thrustor ports in the nose were filled reverting the configuration to -140A/B/C modified with body B_{26}.

The following nomenclature denotes the model components:

Component	Description
B_{26}	140A/B fuselage (VL70-000140A, VL70000140B)
B_{70}	140A/B fuselage (VL70-000140A, VL70-000145, VL70-000140B, VL70-000143A, VL70-000139) with RCS thrustor parts (VL70-08501, VL70-08502, VL70-08296)
C_9	140A/B basic canopy (VL70-000140A, VL70-000143A)
E_{44}	140A/B elevons (VL70-000200, VL70-006089, VL70-006092) with six inch bevelled interpanel gaps, no flipper door
F_9	140A/B body flap (VL70-000140B, VL70-000200)
M_{16}	OMS-RCS pods for 140C Orbiter
N_{28}	OMS basic nozzles
R_5	basic Orbiter rudder (VL70-000146A, VL70-000095)
V_8	basic Orbiter vertical tail (VL70-000140A, VL70-000146A)
W_{116}	basic 140A/B wing (VL70-000140B, VL70-000200)

CONFIGURATIONS INVESTIGATED (Concluded)

Designated configurations are:

-140ABCR $\equiv B_{70}\ C_9\ E_{44}\ F_9\ M_{16}\ N_{28}\ R_5\ V_8\ W_{116}$

-140ABC $\equiv B_{26}\ C_9\ E_{44}\ F_9\ M_{16}\ N_{28}\ R_5\ V_8\ W_{116}$

TEST FACILITY DESCRIPTION

The Ames Research Center Unitary Plan 11- by 11-Foot Transonic Wind Tunnel is a closed-circuit, air-medium, variable-density facility capable of attaining Mach numbers from 0.6 to 1.4 at Reynolds numbers from 1.7 x 10^6/ft to 9.4 x 10^6/ft. The test section is 22 feet long, and models are installed on internal strain-gauge balances mounted to sting-type support systems.

Shadowgraph and Schlieren photographic equipment is available, and pressure transducer instrumentation is provided.

Tunnel operating temperature is 580°R. Extended high Reynolds number runs are restricted by power availability.

DATA REDUCTION

Standard NASA/Ames data reduction equations were used to reduce forces, moments, and pressures to coefficient form. Orbiter main balance force and moment coefficients were computed using the following equations:

Symbol	Orbiter main balance measurement
NF	Normal Force
AF	Axial Force
PM	Pitching Moment
YM	Yawing Moment
SF	Side Force
RM	Rolling Moment

$$C_{A_u} = AF / (q\ S) \qquad C_{L_u} = C_{N_u} \cos\alpha - C_{A_u} \sin\alpha$$

$$C_{N_u} = NF / (q\ S) \qquad C_{D_u} = C_{N_u} \sin\alpha + C_{A_u} \cos\alpha$$

$$C_Y = SF / (q\ S)$$

$$C_{m_u} = \frac{PM}{qSc} + \frac{C_A \cdot Z_T}{c} - \frac{C_N \cdot X_T}{c}$$

$$C_\ell = \frac{RM}{qSb} + \frac{C_Y \cdot Z_T}{b}$$

$$C_n = \frac{YM}{qSb} - \frac{C_Y \cdot X_T}{b}$$

Moment Transfer Distances

X_T = 0.572 in.

Y_T = 0

Z_T = 0.450 in.

The Moment Reference Center about which the data was reduced is located at

	Orbiter (Full Scale)
X_o	1076.68
Y_o	0
Z_o	375.00

Balance coefficients were grouped into datasets RE80$$.

DATA REDUCTION (Continued)

Hinge moments and hinge moment coefficients were computed using the following equations:

Elevon hinge moments (inboard and outboard).

HM_{e_I} = (HM1-HM2) (M1/D1) + HM1

HM_{eo} = (HM3-HM4) (M3/D3) + HM3

where

HMi = measured moment on strain gage i

D1 = distance between gages 1 and 2, .49335 in.

D3 = distance between gages 3 and 4, .45800 in.

M1 = moment transfer distance for inboard elevon, .93825 in.

M3 = moment transfer distance for outboard elevon, .92250 in.

Elevon hinge moment coefficients

Inboard, $C_{H_{e_I}} = HM_{e_I} / (q\ S_e\ c_e)$

Outboard, $C_{H_{eo}} = HM_{e_o} / (q\ S_e\ c_e)$

Total, $C_{H_{e_{TOT}}} = C_{H_{e_I}} + C_{H_{e_o}}$

S_e = elevon reference area, 0.189 ft.^{2}

c_e = elevon reference MAC, 2.721 in.

Body flap hinge moment coefficient

$C_{H_{bf}} = HM_{bf} / (q\ S_{bf}\ c_{bf})$

HM_{bf} = measured body flap hinge moment

S_{bf} = body flap reference area, 0.12834 ft.^{2}

c_{bf} = body flap reference MAC, 2.541 in.

Hinge moment coefficients are part of datasets RE8X$$.

Pressure coefficients for all model orifice pressure measurements were computed using this equation:

$$C_{P_i} = (P_i - P_\infty)/q$$

where P_i = pressure at model orifice i

P_∞ = tunnel static pressure

q = tunnel dynamic pressure

Other data reduction constants include:

S = wing reference area, 2.4210 $ft.^2$

c = wing reference chord, 14.2443 in.

b = wing reference span, 28.1004 in.

After the data had been reduced to coefficient form by NASA/AMES, DMS interpolated it to nominal α's and β's. Then 2 types of base and sting cavity area coefficients were calculated. When they are applied 3 types of balance coefficient data exists. These can be distinguished by the last subscript (symbolic name) or postfix (mnemonic name). The key is given below

U ~ uncorrected coefficients.

~ coefficients with sting cavity pressure corrected to base pressure (without a suffix).

F ~ forebody coefficients with the base area pressure corrected to freestream pressure.

Only the correction coefficients associated with base pressure tapes 1 through 4 were applied to the longitudinal orbiter coefficients.

Figure 2b illustrates the base area associated with each pressure tap. Alphabetic characters bf and sc designate body flap and sting cavity areas, respectively. Base area coefficient names have a numeric character which designates the pressure tap number. Base coefficients for vertical tail areas 5 and 6 were calculated but not applied to the total orbiter coefficients. Base area coefficient values are tabulated in the appendix. A detailed derivation of these coefficients follows. It is concluded by a matrix of base area geometric properties.

The orbiter sting cavity force and moment coefficients were computed as:

$$C_{A_{sc}} = \frac{(C_{p2} - C_{p1})\, A_1}{S}$$

$$C_{N_{sc}} = \frac{(C_{p2} - C_{p1})\, A_1 \tan 12.55°}{S}$$

$$C_{m_{sc}} = C_{A_{sc}} \frac{Z_t}{c} - C_{N_{sc}} \frac{X_{sc}}{c}$$

The orbiter force and moment coefficients corrected for the difference between balance cavity pressure and orbiter base pressure:

$$C_A = C_{A_u} - C_{A_{sc}}$$

$$C_N = C_{N_u} - C_{N_{sc}}$$

$$C_m = C_{m_u} - C_{m_{sc}}$$

These orbiter coefficients are part of datasets KE80$$.

DATA REDUCTION (Continued)

Orbiter base force and moment coefficients were calculated as follows:

Upper base area

$$C_{N2u} = -(C_{p2}\ A_{2u} \tan 16°)/S$$

$$C_{A2u} = -(C_{p2}\ A_{2u})/S$$

$$C_{m2u} = \frac{C_{A2u}\ Z_{2u}}{c} - \frac{C_{N2u}\ X_{2u}}{c}$$

Lower base area

$$C_{N2_\ell} = -(C_{p2}\ A_{2_\ell} \tan 10°)/S$$

$$C_{A2_\ell} = -(C_{p2}\ A_{2_\ell})/S$$

$$C_{m2_\ell} = C_{A2_\ell} \frac{Z_{2\ell}}{c} - C_{N2_\ell} \frac{X_{2\ell}}{c}$$

Total base area, A_2

$$C_{N2} = C_{N2_u} + C_{N2_\ell}$$

$$C_{A2} = C_{A2_u} + C_{A2_\ell}$$

$$C_{m2} = C_{m2_u} + C_{m2_\ell}$$

OMS pod base area, A_3

(This assumes the surface is perpendicular to the orbiter X-axis)

$$C_{A3} = -(C_{p3}\ A_3)/S$$

$$C_{m3} = C_{A3} \frac{Z_3}{c}$$

OMS pod base area, A_4

(This assumes the surface is perpendicular to the orbiter X-axis)

$$C_{A4} = -(C_{p4}\ A_4)/S$$

$$C_{m4} = C_{A4}\ \frac{Z4}{c}$$

Coefficients for the above areas are grouped into datasets EE8D$$.

Upper surface of body flap

$$C_{A_{bf}} = \frac{-C_{p_{bf}}\ A_{bf}}{S}\ \sin\ (\delta_{bf} + 6.88°)$$

$$C_{N_{bf}} = \frac{-C_{p_{bf}}\ A_{bf}}{S}\ \cos\ (\delta_{bf} + 6.88°)$$

$$C_{m_{bf}} = \frac{C_{A_{bf}}\ Z_{bf}}{c} - \frac{C_{N_{bf}}\ X_{bf}}{c}$$

where:

$$C_{p_{bf}} = \frac{C_{p200} + C_{p201} + C_{p204} + C_{p205}}{4}$$

The orbiter force and moment coefficients adjusted to free stream pressure (forebody coefficients).

$$C_{A_F} = C_{A_u} - \left(\frac{-C_{p1}\ A_1}{S} + \sum_{i=2}^{4} C_{A_i} + C_{A_{bf}}\right)$$

$$C_{N_F} = C_{N_u} - \left(C_{N_2} + C_{N_{bf}}\right)$$

$$C_{mF} = C_{mu} - \left(\sum_{i=2}^{4} C_{m_i} + C_{m_{bf}}\right)$$

These orbiter coefficients are part of datasets KE80$$.

Vertical tail "undercarriage" area, A_5

Top Segment:

$$C_{N5t} = (C_{p5}\ A_{5t}\ \tan 63.75°)/S$$

$$C_{A5t} = -(C_{p5}\ A_{5t})/S$$

$$C_{m5t} = C_{A5t}\ \frac{Z_{5t}}{c} - C_{N5t}\ \frac{X_{5t}}{c}$$

Middle Segment:

$$C_{N5m} = (C_{p5}\ A_{5m}\ \tan 26.1426°)/S$$

$$C_{A5m} = -(C_{p5}\ A_{5m})/S$$

$$C_{m5m} = C_{A5m}\ \frac{Z_{5m}}{c} - C_{N5m}\ \frac{X_{5m}}{c}$$

Bottom Segment:

$$C_{N5b} = (C_{p5}\ A_{5b}\ \tan 21.94°)/S$$

$$C_{A5b} = -(C_{p5}\ A_{5b})/S$$

$$C_{m5b} = C_{A5b}\ \frac{Z_{5b}}{c} - C_{N5b}\ \frac{X_{5b}}{c}$$

Total area, A_5:

$$C_{N5} = C_{N5t} + C_{N5m} + C_{N5b}$$

$$C_{A5} = C_{A5t} + C_{A5m} + C_{A5b}$$

$$C_{M5} = C_{m5t} + C_{m5m} + C_{m5b}$$

Vertical Tail base area, A_6:

Segment above rudder

$$C_{N6u} = (C_{p6}\ A_{6u}\ \tan 63.75°)/S$$

$$C_{A6u} = (C_{p6}\ A_{6u})/S$$

$$C_{m6u} = C_{A6u}\ \frac{Z_{6u}}{c} - C_{N6u}\ \frac{X_{6u}}{c}$$

Rudder/Speed brake base:

$$C_{A6_\ell} = C_{p6} A_{6'_\ell} [\sin(\theta - 55.1667^\circ) \cos 55.1667^\circ$$
$$+ \cos(\theta - 55.1667^\circ) \sin 55.1667^\circ \cos(\delta r)]/S$$

$$C_{N6_\ell} = C_{p6} A_{6'_\ell} [\sin(\theta - 55.1667^\circ) \sin 55.1667^\circ$$
$$- \cos(\theta - 55.1667^\circ) \cos 55.1667^\circ \cos(\delta r)]/S$$

$$C_{Y6_\ell} = C_{p6} A_{6'_\ell} \cos(\theta - 55.1667^\circ) \sin \delta r/S$$

$$C_{m6_\ell} = [C_{A6_\ell} (Z_{6_\ell}) - C_{N6} (X_{6_\ell})]/c$$

$$C_{\ell 6_\ell} = [C_{Y6_\ell} (Z_{6_\ell})]/b$$

$$C_{n6_\ell} = -[C_{Y6} (X_{6_\ell})]/b$$

$$\theta = \tan^{-1} \left[\frac{5.456791 + .573209 \cos\left(\frac{\delta_{SB}}{2}\right)}{3.797715 - .823715 \cos\left(\frac{\delta_{SB}}{2}\right)} \right]$$

$$A_{6'_\ell} = A_{6_\ell}/\sin\theta$$

Total area, A_6:

$$C_{A6} = C_{A6u} + C_{A6\ell}$$

$$C_{N6} = C_{N6u} + C_{N6\ell}$$

$$C_{Y6} = C_{Y6\ell}$$

$$C_{m6} = C_{m6u} + C_{m6\ell}$$

$$C_{\ell 6} = C_{\ell 6\ell}$$

$$C_{n6} = C_{n6_\ell}$$

Vertical tail area coefficient data are grouped into datasets GE8D$$.

BASE GEOMETRIC PROPERTIES MATRIX

Description	Sub-script	Area A ~ ft.^{2}	Distance between Centroid and MRC vertical Z ~ in.	Distance between Centroid and MRC longitudinal X ~ in.
Sting cavity	sc	0.076699	0.45	12.199
Body flap upper surface	bf	0.128	- 2.64	13.659
Orbiter balance cavity	1	0.076699	0.45	12.199
Orbiter base orifice 2 lower	2ℓ	0.133889	- 1.32	12.617
Orbiter base orifice 2 upper	2u	0.0818055	2.07	12.384
Lower OMS pod	3	0.030472	2.68	NA
Upper OMS pod	4	0.074166	3.63	NA
Vertical tail "undercarriage" bottom	5b	0.003565	4.612	12.395
Vertical tail "undercarriage" middle	5m	0.002610	5.336	14.079
Vertical tail "undercarriage" top	5t	0.000341	5.97	15.185
Vertical tail above rudder	6u	0.000798	12.656	18.482
Base area of speed brake	6ℓ	Varies with speed brake deflection		

NOTES: Sting cavity and Orbiter balance cavity are synonymous.

NA - not applicable.

DATA REDUCTION (Continued)

δ_{sb}	$A6_{\ell}$ ft^2
0	0.0066036
25	0.0456000
35	0.0621000
55	0.0950800
85	0.1551400

$$X_{6\ell} = 15.045 + 1.442277\ [1 - \cos\ (\delta sb/2)]$$

$$Z_{6\ell} = 9.755 + 0.501827\ [1 - \cos\ (\delta sb/2)]$$

Standard DMS loads cycle test procedures were used to process the 0A148 pressure data. First numerous pressure distribution plots were released. Analysis of these produced bad pressure data list. This list is reproduced below:

DATA REDUCTION (Continued)

0A148 Bad Pressure Data

Component	Dataset No.	Tap No.	β	α
Fuselage (B)	1	143	4	-4
	1	148	4	-4
	1	150	4	-4
	1	152	4	-4
	1	186	4	-4
	1	187	4	-4
	1	189	4	-4
	1	191	4	-4
	1	193	4	-4
Lower Wing (L)	1 → 7	231	ALL	ALL
	1 → 85	290	ALL	ALL
	1	316	4	-4
	1	317	4	-4
	1	337	4	-4
	1	338	4	-4
	1	358	4	-4
	1	378	4	-4
	1	379	4	-4
	1	398	4	-4
Upper Wing (U)	1 → 7	247	ALL	ALL
	1	357	4	-4
Body Flap (F)	24	205	-4	12
Speed Brake (K)	1 → 85	822	ALL	ALL
Vertical Tail (V)	8	443	ALL	ALL
	ALL	1444	ALL	ALL
	79	1453	-4	-4
	79	1454	-4	-4

Note: Wind tunnel pressure data tabulated in the appendix have the original bad data values.

These points were eliminated from further processing. The remaining data were interpolated to nominal alpha and beta values. Processing was completed with the release of a magnetic tape containing the final interpolated pressure coefficients.

This report contains plots and tabular listings for both force and pressure data. Plotted force data illustrates lateral-directional, longitudinal and hinge moment characteristics of the configuration tested. Plotted pressure data illustrates the effect of several control deflections and attitude changes on local pressure distributions. The multiple volume appendix contains a tabulated listing of the basic force and pressure data. Listing of the interpolated base area coefficients is also included. The plotted and tabulated data are arranged in the following manner:

VOLUME NO.	CONTENTS
1	Force data plots showing lateral-directional longitudinal and hinge moment characteristics.
2	Plots illustrating the effect of control surface deflections on fuselage, wing and vertical tail pressure distributions.

DATA REDUCTION (Concluded)

VOLUME NO.	CONTENTS
3	Tabulated Force Data

Dataset	Data type
RE80$$	source balance coefficients
RE8X$$	source hinge moment coefficients
RE8Y$$	source base pressure coefficients
KE80$$	interpolated balance coefficients adjusted for cavity pressure and forebody coefficients
EE8D$$ FE8D$$	interpolated base and cavity area coefficients
GE8D$$	interpolated vertical tail base area coefficients

Tabulated Pressure Data

VOLUME NO.	Component	Fourth Character*	Page
4, 5	orbiter fuselage	B	1
6,7,8	lower wing	L	1271
9,10,11	upper wing	U	3147
12	upper body flap	F	5405
12	lower body flap	G	5774
13	speed brake	K	6143
13	vertical tail	V	6547

---

* The fourth character in each dataset identifier (i.e., XE8BXX, B for Fuselage) represents the individual component.

REFERENCES

1. SD75-SH-0106, "Pretest Information for OA148 of the 0.03-Scale 47-0 Pressure Loads Space Shuttle Model in the 11 x 11 Foot Leg of the NASA/ARC Unitary Plan Wind Tunnel," April 18, 1975.

2. MG-75-07-11, Rockwell International Corporation Internal Letter: "Model design Dimensional Varification Task 36: Elevon Deflection Angle Check of the 0.03-Scale SSV Model 47-0 (140A/B Configuration)". SAS/WTO/75-283, July 29, 1975.

TABLE I

TEST : 0A148

DATE : May 1976

TEST CONDITIONS

MACH NUMBER	REYNOLDS NUMBER (per foot)	DYNAMIC PRESSURE (pounds/sq. inch)	STAGNATION TEMPERATURE (degrees Fahrenheit)
0.60	4.57×10^6	4.166	120
0.90	3.41×10^6	4.166	120
1.10	3.05×10^6	4.166	120
1.25	2.86×10^6	4.166	120
1.40	2.74×10^6	4.166	120

BALANCE UTILIZED: ARC Task MK XX A

	CAPACITY:	ACCURACY:	COEFFICIENT TOLERANCE:
NF	3000 lbf/gage		
SF	1500 lbf/gage		
AF	600 lbf		
PM	27,000 in-lbf		
RM	4000 in-lbf		
YM	10,500 in-lbf		

COMMENTS: Maximum normal and side force dependent upon point of application [illegible] -073

TABLE II.

TEST: OA 148

DATA SET RUN NUMBER COLLATION SUMMARY

DATE: Post Test

DATA SET IDENTIFIER	CONFIGURATION	α	β	δ_R	δ_{SB}	δ_{BF}	δ_{EL}	δ_{ER}	α = -4	0	4	8	12	16	MACH NUMBERS			
RE8001	-140 ABCR	B	D	0	55	16.3	0	0	32	33	34	35	58	59		1.4		
002		A	D						38	39	40	41	42			1.25		
003		A	D						43	44	45	46	47			1.1		
004		A	D						48	49	50	51	52			0.9		
005		A	C						53	54	55	56	57			0.6		
006	-140 ABCR	A	C	0	55	22.5	0	0	60	61	62	63	64			0.6		
007		A	D						68	66	67	69	70			0.9		
008	-140 ABCR	B	D	0	85	22.5	0	0	71	72	73	74	75	76		1.4		
009		A	D						77	78	79	80	81			1.25		
010		A	D						82	83	84	85	86			1.1		
011		A	D						87	88	89	90	91			0.9		
012		A	C						92	93	94	95	96			0.6		

TEST RUN NUMBER

1 13 19 43

COEFFICIENTS

IDVAR (1) IDVAR (2) NDV

α OR β SCHEDULES

Aα = -4, 0, 4, 8, 12
Bα = -4, 0, 4, 8, 12, 16
Cβ = -8, -4, 0, 4, 8
Dβ = -4, 0, 4

NASA-MSFC-MAF

TABLE II - Continued.

TEST: OA 148

DATA SET RUN NUMBER COLLATION SUMMARY

DATE: POST TEST

DATA SET IDENTIFIER	CONFIGURATION	α	β	δ_R	δ_{SB}	δ_{BF}	δ_{EL}	δ_{ER}	α = -4	0	4	8	12	16	MACH NUMBERS			
RE8013	-140 ABCR	B	D	0	35	0	0	0	97	98	99	100	101	102		1.4		
014		A	D						103	104	105	106	107			1.25		
015		A	D						108	109	110	111	112			1.1		
016		A	D						113	114	115	116	117			0.9		
017		A	C						118	119	120	121	122			0.6		
018	-140 ABCR	B	D	0	0	-11.7	0	0	123	124	125	126	127	128		1.4		
019		A	D						131	129	130	132	133			1.25		
020		A	D						134	135	136	137	138			1.1		
021		A	D						139	140	141	142	143			0.9		
022		A	C						144	145	146	147	148			0.6		
023	-140 ABCR	B	D	0	0	0	0	0	149	150	151	152	153	154		1.4		
024		A	D						155	156	157	158	159			1.25		
025		A	D						160	161	162	163	164			1.1		
026		A	D						165	166	167	168	169			0.9		
027		A	C						170	171	172	173	174			0.6		

TEST RUN NUMBER

1 7 13 19 25 31 37 43 49 55 61 67 75 76

COEFFICIENTS IDVAR (1) IDVAR (2) NDV

α OR β SCHEDULES

NASA-MSFC-MAF

TABLE II. - Continued.

TEST: OA 148

DATA SET RUN NUMBER COLLATION SUMMARY

DATE: POST TEST

DATA SET IDENTIFIER	CONFIGURATION	α	β	δ_r	δ_{SB}	δ_{BF}	δ_{EL}	δ_{ER}	α -4	0	4	8	12	16	MACH NUMBERS
RE8028	140 ABCR	B	D	-10	35	16.3	10	0	175	176	177	178	179	180	1.4
029		A	D						181	182	183	184	185		1.25
030		A	D						186	187	188	189	190		1.1
031		A	D						191	192	193	194	195		0.9
032		A	C						196	197	198	199	200		0.6
033	140 ABCR	B	D	+10	35	16.3	0	10	201	202	203	204	205	206	1.4
034		A	D						207	208	209	210	211		1.25
035		A	D						212	213	214	215	216		1.1
036		A	D						217	218	219	220	221		0.9
037		A	C						222	223	224	225	226		0.6
038	140 ABCR	B	D	+10	85	16.3	10	10	227	228	229	230	231	232	1.4
039		A	D						233	234	235	236	237		1.25
040		A	D						238	239	240	241	242		1.1
041		A	D						243	244	245	246	247		0.9
042		A	C						248	249	250	251	252		0.6

TEST RUN NUMBER

1 7 13 19 25 31 37 43 49 55 61

COEFFICIENTS IDVAR (1) IDVAR (2) NDV

α OR β SCHEDULES

NASA-MSFC-MAF

TABLE II. - Continued.

TEST OA 148

DATA SET RUN NUMBER COLLATION SUMMARY

DATE: POST TEST

DATA SET IDENTIFIER	CONFIGURATION	α	β	δ_R	δ_{SB}	δ_{BF}	δ_{EL}	δ_{ER}	α -4	0	4	8	12	16	MACH NUMBERS
RE8043	140 ABCR	A	D	0	55	225	10	10	253	254	255	256	257		0.9
044		A	C						258	259	260	261	262		0.6
045	140 ABCR	A	D	0	55	225	4	4	263	264	265	266	267		0.9
046		A	C						268	269	270	271	272		0.6
047	140 ABCR	B	D	-10	85	163	4	4	273	274	275	276	277	278	1.4
048		A	D						279	280	281	282	283		1.25
049		A	D						284	285	286	287	288		1.1
050		A	D						289	290	291	292	293		0.9
051		A	C						294	295	296	297	298		0.6
052	140 ABCR	B	D	-10	55	163	-4	+4	299	300	301	302	303	304	1.4
053		A	D						305	306	307	308	309		1.25
054		A	D						310	311	312	313	314		1.1
055		A	D						315	316	317	318	319		0.9
056		A	C						320	321	322	323	324		0.6

TEST RUN NUMBER

7 13 19 25 31 37 43 49 55

COEFFICIENTS

IDVAR (1) IDVAR (2) NDV

α OR β SCHEDULES

NASA-MSFC-MAF

TABLE II. - Continued.

TEST: CA 49

DATA SET RUN NUMBER COLLATION SUMMARY

DATE: [illegible]

DATA SET IDENTIFIER	CONFIGURATION								α						MACH NUMBERS			
		α	β	δ_R	δ_{SB}	δ_{BF}	δ_{EL}	δ_{ER}	-4	0	4	8	12	16				
RE8057	-140ABCR	B	D	10	55	1.3	4	-4	325	326	327	328	329	330		.4		
058		A	D						331	332	333	334	335			1.25		
059		A	D						[illegible]	337	338	[illegible]	[illegible]			[illegible]		
[illegible]		A	D						341	342	343	344	[illegible]			[illegible]		
[illegible]		A	C						[illegible]	[illegible]	348	[illegible]	[illegible]			[illegible]		
06[illegible]	-140ABCR	B	D	-5	55	1.3	-4	-4	351	352	353	354	355	[illegible]		.4		
[illegible]		A	D						357	358	359	360	[illegible]			1.25		
064		A	[illegible]						362	363	[illegible]	[illegible]	366			[illegible]		
065		A	D						367	368	[illegible]	370	[illegible]			[illegible]		
[illegible]		A	C						372	373	374	[illegible]	[illegible]			[illegible]		
[illegible]	[illegible]	A	D	0	55	[illegible]	-4	-4	[illegible]	[illegible]	[illegible]	[illegible]	[illegible]			[illegible]		
[illegible]		A	C						[illegible]	[illegible]	[illegible]	[illegible]	[illegible]			[illegible]		
[illegible]	[illegible]	A	D	0	55	[illegible]	-10	-10	387	[illegible]	[illegible]	[illegible]	[illegible]			[illegible]		
[illegible]		A	C						39[illegible]	[illegible]	[illegible]	[illegible]	[illegible]			[illegible]		

TEST RUN NUMBER

1 7 13 19 25 31 37 43 49 55

COEFFICIENTS

IDVAR (1) IDVAR (2) NDV

α OR β SCHEDULES

NASA-MSFC-MAF

TABLE II. - Concluded.

TEST: OA143

DATA SET RUN NUMBER COLLATION SUMMARY

DATE: POST TEST

DATA SET IDENTIFIER	CONFIGURATION								α						MACH NUMBERS			
		α	β	δ_{EL}	δ_{ER}	δ_{BF}	δ_{CL}	$\delta_{e\ell}$	-4	0	+4	8	12	16				
RCB071	-140 ABC	B	D	-5	55	16.3	-10	-10	397	398	399	400	401	402		1.4		
072		A	D						403	404	405	406	407			1.25		
073		A	D						408	409	410	411	412			1.1		
074		A	D						413	414	415	416	417			0.9		
075		A	C						418	419	420	421	422			0.6		
076	- 40 ABC	B	D	+10	0	-11.7	+10	-10	423	424	425	426	427	428		1.4		
077		A	D						429	430	431	432	433			1.25		
078		A	D						434	435	436	437	438			1.1		
[illegible]		A	D						439	440	441	442	443			[illegible]		
[illegible]		A	C						444	445	446	447	448			[illegible]		
[illegible]	-140 ABC	B	E	10	0	-11.7	-10	+10	449	450	451	452	453	454		1.4		
082		A	E						455	456	457	458	459			1.25		
083		A	E						460	461	462	463	464			1.1		
084		A	F						465	466	467	468	469			0.9		
085		A	O						470	471	472	473	474			0.6		

TEST RUN NUMBER

1 7 13 19 25 31 37 43 49 55 61 67 75 76

COEFFICIENTS IDVAR (1) IDVAR (2) NDV

α OR β SCHEDULES

$E_\beta = 0 @ \alpha = -4\ 0\ 8\ 16$
$-4\ 0\ 4 @ \alpha = 4, 12$

$F_\beta = 0 @ \alpha = -4\ 0\ 8\ 12$
$-4, 0, 4 @ \alpha = 4$

NASA-MSFC-MAF

TABLE III
MODEL DIMENSIONAL DATA

MODEL COMPONENT : BODY - B_{26}

GENERAL DESCRIPTION : Configuration 140A/B orbiter fuselage

NOTE: B_{26} is identical to B_{24} except underside of fuselage has been refaired to accept W_{116}.

MODEL SCALE: 0.030 MODEL DRAWING: SS-A00147, Release 12

DRAWING NUMBER : VL70-000143B, -000200, -000205, -006089, -000145
VL70-000140A, -000140B

DIMENSIONS :	FULL SCALE	MODEL SCALE
Length (OML: Fwd Sta. X_0 =235), In.	1293.3	38.799
Length (IML: Fwd Sta X =238), In.	1290.3	38.709
Max Width (@ X_0 = 1528.3), In.	264.0	7.920
Max Depth (@ X_0 = 1464), In.	250.0	7.500
Fineness Ratio	0.264	0.264
Area - Ft^2		
Max. Cross-Sectional	340.88	0.3068
Planform		
Wetted		
Base		

TABLE III (Continued)

MODEL COMPONENT : BODY - B_{70}

GENERAL DESCRIPTION : Configuration 140A/B orbiter fuselage with forward fuselage RCS thruster ports, otherwise B_{70} is identical to B_{26}.

MODEL SCALE: 0.030

DRAWING NUMBER . VL70-000140A, -000140B, -000143B, -000145, -000200,
VL70-000205, -006089, -008501, -008502, -008296

DIMENSIONS .	FULL SCALE	MODEL SCALE
Length (OML: Fwd Sta X_0=235), In.	1293.3	38.799
Length (IML: Fwd Sta X_0 =238), In.	1290.3	38.709
Max Width (@ X_0 = 1528.3), In.	264.0	7.920
Max Depth (@ X_0 = 1464), In.	250.0	7.500
Fineness Ratio	0.264	0.264
Area - Ft^2		
Max. Cross-Sectional	340.88	0.3068
Planform		
Wetted		
Base		

TABLE III (Cont'd)

MODEL COMPONENT : CANOPY - C_9

GENERAL DESCRIPTION : Configuration 3A. Canopy used with fuselage B_{26}.

MODEL SCALE: 0.030 MODEL DWG: SS-A00147, Release 12

DRAWING NUMBER : VL70-000143A

DIMENSIONS :

	FULL SCALE	MODEL SCALE
Length (X_O=434.643 to 578), In.	143.357	4.301
Max Width (@ X_O = 513.127), In.	152.412	4.572
Max Depth (@ X_O = 485.0), In.	25.00	0.750
Fineness Ratio		
Area		
Max. Cross-Sectional		
Planform		
Wetted		
Base		

TABLE III (Cont'd)

MODEL COMPONENT ELEVON - E_{44}

GENERAL DESCRIPTION 6.0 In. F.S. caps machined into E_{26} elevon. Flipper doors centerbody pieces, and tipseals are not simulated. (Data are for one of two sides.)

MODEL SCALE: 0.030

DRAWING NUMBER

DIMENSIONS	FULL SCALE	MODEL SCALE
Area - Ft^2	210.0	0.189
Span (equivalent), In.	349.2	10.476
Inb'd equivalent chord, In.	118.0	3.54
Outb'd equivalent chord, In.	55.19	1.656
Ratio movable surface chord/ total surface chord		
At Inb'd equiv. chord	0.2096	0.2096
At Outb'd equiv. chord	0.4004	0.4004
Sweep Back Angles, degrees		
Leading Edge	0.00	0.00
Trailing Edge	- 10.056	- 10.056
Hingeline	0.0	0.0
Area Moment (Product of Area & $\bar{c}$), Ft^3	1587.25	0.0429
Mean Aerodynamic Chord, In.	90.7	2.721

TABLE III (Cont'd)

MODEL COMPONENT : BODY FLAP - F_9

GENERAL DESCRIPTION : Configuration 140A/B

MODEL SCALE: 0.030

DRAWING NUMBER : VL70-000140B, -000200

DIMENSIONS :

	FULL SCALE	MODEL SCALE
Length (Chord), In.	84.7	2.541
Max Width , In.	262.308	7.869
Max Depth , In.	23.00	0.690
Fineness Ratio		
Area - Ft^2		
Max. Cross-Sectional		
Planform	142.60	0.128
Wetted		
Base	41.90	0.0377

REPRODUCIBILITY OF THE
ORIGINAL PAGE IS POOR

TABLE III (Cont'd)

MODEL COMPONENT : OMS POD - M_{16}

GENERAL DESCRIPTION : Configuration 140C orbiter OMS pod - short pod. External contour is to referenced drawings with 1/2" added to simulate TPS.

MODEL SCALE: 0.015

DRAWING NUMBER : VL70-008401, -008410

DIMENSIONS :	FULL SCALE	MODEL SCALE
Length (OMS Fwd Sta X_0 =1310.5), In.	258.50	7.755
Max Width (@ X_0 = 1511), In.	136.8	4.104
Max Depth (@ X_0 = 1511), In.	74.70	2.241
Fineness Ratio	2.484	2.484
Area - Ft^2		
Max. Cross-Sectional	58.865	0.053
Planform		
Wetted		
Base		

TABLE III (Cont'd)

MODEL COMPONENT: OMS ~~MPS NOZZLES~~ - N_{28}

GENERAL DESCRIPTION: Configuration 140A/B orbiter OMS nozzles.

MODEL SCALE: 0.030

DRAWING NUMBER: VL70-000140A (Location), SS-A00106, Release 9 (Contour)

DIMENSIONS:	FULL SCALE	MODEL SCALE
MACH NO.		
Length - In.		
Gimbal Point to Exit Plane		
Throat to Exit Plane		
Diameter - In.		
Exit		
Throat		
Inlet		
Area - ft^2		
Exit		
Throat		
Gimbal Point (Station) - In.		
Left Nozzle		
X_O	1518.0	45.54
Y_O	- 88.0	- 2.64
Z_O	492.	14.76
Right Nozzles		
X_O	1518.0	45.54
Y_O	88.0	2.64
Z_O	492.0	14.76
Null Position - Deg.		
Left Nozzle		
Pitch	15°49'	15°49'
Yaw	12°17'	12°17'
Right Nozzle		
Pitch	15°49'	15°49'
Yaw	12°17'	12°17'

TABLE III (Cont'd)

MODEL COMPONENT RUDDER - R_5

GENERAL DESCRIPTION Configuration 140C orbiter rudder (identical to configuration 140A/B rudder).

MODEL SCALE: 0.030

DRAWING NUMBER VL70-000146B, -000095

DIMENSIONS	FULL SCALE	MODEL SCALE
Area - Ft^2	100.15	0.090
Span (equivalent), In.	201.00	6.030
Inb'd equivalent chord, In.	91.585	2.748
Outb'd equivalent chord, In.	50.833	1.525
Ratio movable surface chord/ total surface chord		
At Inb'd equiv. chord	0.400	0.400
At Outb'd equiv. chord	0.400	0.400
Sweep Back Angles, degrees		
Leading Edge	34.83	34.83
Trailing Edge	26.25	26.25
Hingeline	34.83	34.83
Area Moment (Product of area & $\bar{c}$), Ft^3	610.92	0.0165
Mean Aerodynamic Chord, In.	73.2	2.196

TABLE III (Cont'd)

MODEL COMPONENT: VERTICAL - V_8

GENERAL DESCRIPTION: Configuration 140C orbiter vertical tail. (Identical to configuration 140A/B vertical tail.)

MODEL SCALE: 0.030

DRAWING NUMBER: VL70-000140C, -000146B

DIMENSIONS:	FULL SCALE	MODEL SCALE
TOTAL DATA		
Area (Theo) - Ft^2		
Planform	413.253	0.372
Span (Theo) - In.	315.72	9.472
Aspect Ratio	1.675	1.675
Rate of Taper	0.507	0.507
Taper Ratio	0.404	0.404
Sweep-Back Angles, Degrees.		
Leading Edge	45.000	45.000
Trailing Edge	26.25	26.25
0.25 Element Line	41.13	41.13
Chords:		
Root (Theo) WP	268.50	8.055
Tip (Theo) WP	108.47	3.254
MAC	199.81	5.994
Fus. Sta. of .25 MAC	1463.35	43.901
W.P. of .25 MAC	635.52	19.066
B.L. of .25 MAC	0.0	0.0
Airfoil Section		
Leading Wedge Angle - Deg.	10.0	10.0
Trailing Wedge Angle - Deg.	14.92	14.92
Leading Edge Radius	2.0	0.060
Void Area	13.17	0.0019
Blanketed Area	0.0	0.0

TABLE III (Cont'd)

MODEL COMPONENT: WING-W_{116}

GENERAL DESCRIPTION: Configuration 4

NOTE: Identical to W_{114} except airfoil thickness. Dihedral angle is along trailing edge of wing.

MODEL SCALE: 0.030

TEST NO. DWG. NO. VL70-000140A, -000200

DIMENSIONS:	FULL-SCALE	MODEL SCALE
TOTAL DATA		
Area (Theo.) Ft^2		
Planform	2690.00	2.421
Span (Theo In.	936.68	28.10
Aspect Ratio	2.265	2.265
Rate of Taper	1.177	1.177
Taper Ratio	0.200	0.200
Dihedral Angle, degrees	3.500	3.500
Incidence Angle, degrees	0.500	0.500
Aerodynamic Twist, degrees		
Sweep Back Angles, degrees		
Leading Edge	45.000	45.000
Trailing Edge	- 10.056	- 10.056
0.25 Element Line	35.209	35.209
Chords:		
Root (Theo) B.P.O.O.	689.24	20.677
Tip, (Theo) B.P.	137.85	4.136
MAC	474.81	14.244
Fus. Sta. of .25 MAC	1136.83	34.105
W.P. of .25 MAC	290.58	8.717
B.L. of .25 MAC	182.13	5.464
EXPOSED DATA		
Area (Theo) Ft^2	1751.50	1.576
Span, (Theo) In. BP108	720.68	21.620
Aspect Ratio	2.059	2.059
Taper Ratio	0.245	0.245
Chords		
Root BP108	562.09	16.863
Tip 1.00 $\frac{b}{2}$	137.85	4.136
MAC	392.83	11.785
Fus. Sta. of .25 MAC	1185.98	35.579
W.P. of .25 MAC	295.30	8.829
B.L. of .25 MAC	251.77	7.555
Airfoil Section (Rockwell Mod NASA) XXXX-64		
Root $\frac{b}{2}$ =	0.113	0.113
Tip $\frac{b}{2}$ =	0.120	0.120
Data for (1) of (2) Sides		
Leading Edge Cuff Planform Area Ft^2	113.18	0.102
Leading Edge Intersects Fus M. L. @ Sta	500.0	15.0
Leading Edge Intersects Wing @ Sta	1024.0	30.720

TABLE IV.

FUSELAGE PRESSURE TAP LOCATIONS –

ORBITER ~ IN.			Φ RADIAL LOCATION ~ DEGREES																				
FULL	MOD	X_o/L_o	0	20	40	55	70	90	105	110	120	135	140	150	151	156	162	165	169	174	180	No TAPS	Σ No TAPS
235	7.05	0	7																			1	1
245	7.35	.008	8					9													10	3	4
265	7.95	.023	11	12	13	14	15	16			17			18							19	9	13
295	8.85	.046		24	25	26	27	28			29			30							31	8	21
325	9.75	.070		36	37	38	39	40			41			42							43	8	29
330	11.40	.112	47	48	49	50	51	52			53			54							55	9	38
440	13.20	.158																		59		1	39
450	13.50	.166	60	61	62	63	64	65			66			67					68		69	10	49
465	13.95	.177													73		74					2	51
500	15.00	.204	75	76	77	78	79	80			81		82	83				84			85	[illegible]	62
560	16.80	.251	89		90		91	92			93			94				95			96	8	70
625	18.75	.301	98		99		100	101			102			103				104			105	8	78
725	21.75	.378	107		108		109	110			111			112				113			114	8	86
880	26.40	.497	116		117		118	119			120			121				122			123	8	94
980	29.40	.574	125		126																	2	96
1080	32.40	.652	128		129		130	131			132			133				134			135	8	104
1180	35.40	.729	137		138		139	140			141			142							143	7	111

TABLE IV. - Concluded.

FUSELAGE PRESSURE TAP LOCATIONS

ORBITER ~ IN.			Φ RADIAL LOCATION ~ DEGREES																						
FULL	MODEL	X_o/L_o	0	20	40	55	70	90	105	110	120	135	140	150	151	156	162	165	169	174	180	305	320	340	NO TAPS	Σ No TAPS
1245	37.35	.779	145		146		147	148	149		150	151		152				153			154				10	10
1300	39.0	.821	156		157		158	159	160		161	162		163							164				9	19
1375	41.25	.879	166		167		168	169	170		171	172		173				174							9	28
1430	42.9	.921	176		177		178	179	180		181	182		183				184							9	37
1480	44.4	.960	186		187		188	189	190		191	192		193				194							9	46
1530	45.9	.999								196 198	197 199														4	50

TABLE V.

Y/l	Y0	LEFT WING PRESSURE TAP LOCATIONS																No TAPS	Σ No TAPS
.235	110	X/C	0	.041	.113	.247	.429	.547	.633	.727	.793								9
		TOP	208	209	210	211	212	213	214	215	216							9	
		BOT	—	—	—	—	—	—	—	—	—							0	
.299	140	X/C	0	.010	.020	.050	.094	.229	.362	.497		.700	.834	.865	.900	.965			34
		TOP	217	218	219	220	221	222	223	224		225	226	227	228	229		13	
		BOT		230	231	232	233	234	235	236		237	238	239	240	241		12	
.364	170	X/C	0	.010	.020	.040	.086	.163	.246	.390		.637	.798	.839	.879	.919	.955		61
		TOP	242	243	244	245	246	247	248	249		250	251	252	253	254	255	14	
		BOT		256	257	258	259	260	261	262		263	264	265	266	267	268	13	
.427	200	X/C	0	.010	.020	.040	.083	.177	.274	.402	.565	.760	.808	.857	.905	.953	1.00		89
		TOP	269	270	271	272	273	274	275	276	277	278	279	280	281	282		14	
		BOT		283	284	285	286	287	288	289	290	291	292	293	294	295	296	14	
.534	250	X/C	0	.010	.020	.050	.080	.150	.250	.400	.550	.725	.775	.850	.900	.950			116
		TOP	297	298	299	300	301	302	303	304	305	306	307	308	309	310	.	14	
		BOT		311	312	313	314	315	316	317	318	319	320	321	322	323		13	

TABLE V. - Concluded.

η	Y_o	LEFT WING PRESSURE TAP LOCATIONS																No TAPS	Σ No TAPS
.641	300	X/C	0	.010	.020	.050	.150	.250	.400	.550	.700	.775	.850	.920	1.00				123
		TOP										333	334	335				3	
		BOT										344	345	346	347			4	
.673	315	X/C	0	.010	.020	.050	.150	.250	.400	.550	.700	.775	.850	.920	1.00				140
		TOP	324	325	326	327	328	329	330	331	332							9	
		BOT		336	337	338	339	340	341	342	343							8	
.780	365	X/C	0	.010	.020	.050	.150	.250	.650	.750	.850	.950							159
		TOP	348	349	350	351	352	353	354	355	356	357						10	
		BOT		358	359	360	361	362	363	364	365	366						9	
.887	415	X/C	0	.010	.020	.050	.150	.250	.400	.600	.750	.900	1.0						179
		TOP	367	368	369	370	371	372	373	374	375	376						10	
		BOT		377	378	379	380	381	382	383	384	385	386					10	
.972	455	X/C	0	.020	.069	.157	.345	.503	.670	.862									194
		TOP	387	388	389	390	391	392	393	394								8	
		BOT		395	396	397	398	399	400	401								7	
1.0	46234	X/C	.418	.723															196
		TOP	402	403														2	
		BOT																	

TABLE VI.

ORBITER VERTICAL TAIL & SPEED BRAKE
PRESSURE TAP LOCATIONS

VERTICAL (LH ONLY)		X/C$_V$											
Z_o FULL SCALE	Z_o MODEL SCALE	η_V	0	.025	.05	.15	.30	.52	.685	.775	.90	NO TAPS	Σ NO TAPS
550	16.5	.153	430	431	432	433	434	435	436	437		8	8
600	18.0	.306	438	439	440	441	442	443	444	445	446	9	17
645	19.35	.459							444	445	446	3	20
690	20.70	.600	447	448	449	450	451	452	453	454	455	9	29
720	21.6	.720							453	454	455	3	32
765	22.95	.840	456	457	458	459	460	461	462	463	464	9	41
792	23.76	.925	465	466	467	468	469	470	471	472	473	9	50

SPEED BRAKE (R H INSIDE)		X/C$_{SB_V}$							
Z_o FULL SCALE	Z_o MODEL SCALE	$\eta/_{SB}$	.10	.25	.40	.65	.90	NO TAPS	Σ NO TAPS
600	18.0	.110	801	802	803	804	805	5	5
630	18.9	.254	806	807	808	809	810	5	10
666	19.8	.407	811	812	813	814	815	5	15
690	20.7	.567	816	817	818	819	820	5	20
720	21.6	.706	821	822	823	824	825	5	25
750	22.5	.856	826	827	828	829	830	5	30

REPRODUCIBI
ORIGINAL PA

TABLE VII.

BODYFLAP PRESSURE TAP LOCATIONS

ORBITER ~ X_0			ϕ ~ DEGREES			
FULL SCALE	MODEL SCALE	X_0/L_0	0	40	NO. TAPS	Σ NO TAPS
1555 U	46.65	1.018	200	201	2	2
1555 L	46.65	1.018	202	203	2	4
1590 U	47.70	1.046	204	205	2	6
1590 L	47.70	1.046	206	207	2	8

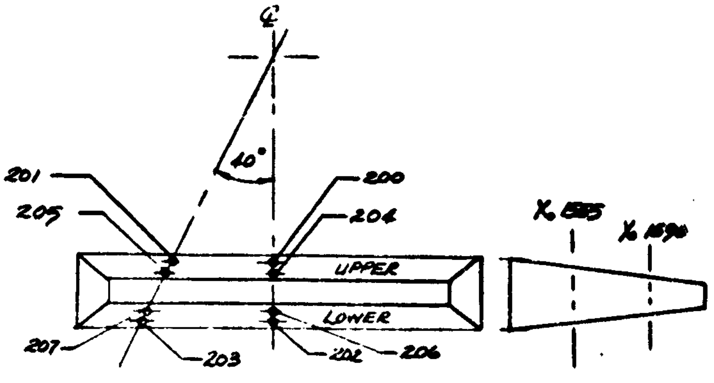

℄
40°
201
205
200
204
UPPER
LOWER
207
203
202
206
X_0 1555
X_0 1590

LOOKING FORWARD.

Notes:

1. Positive directions of force coefficients, moment coefficients, and angles are indicated by arrows
2. For clarity, origins of wind and stability axes have been displaced from the center of gravity

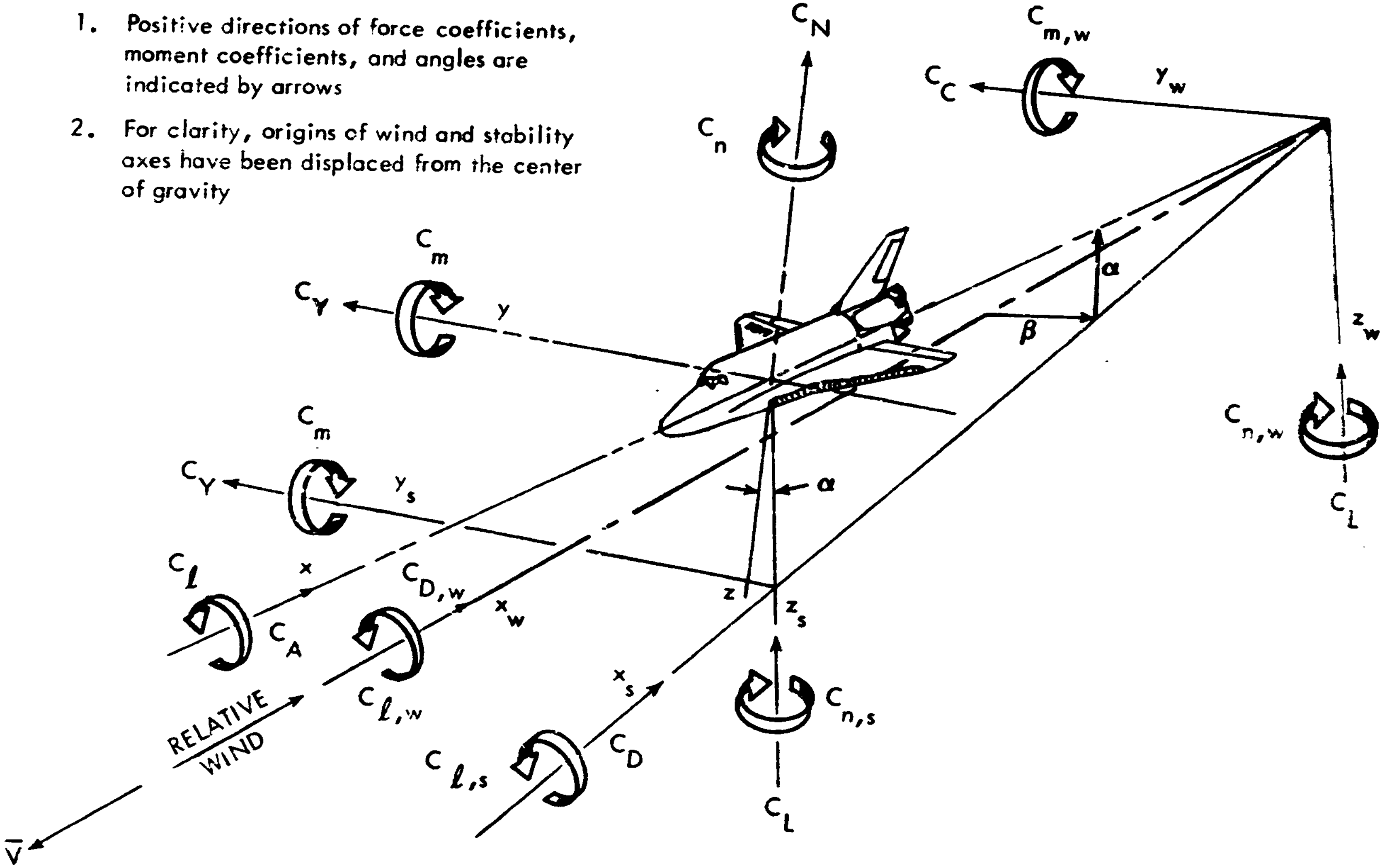
C_N
C_n
$C_{m,w}$
C_C
y_w
C_m
C_Y
y
α
β
z_w
$C_{n,w}$
C_L
C_m
C_Y
y_s
α
C_ℓ
x
$C_{D,w}$
x_w
z
z_s
C_A
$C_{\ell,w}$
x_s
$C_{n,s}$
RELATIVE WIND
$C_{\ell,s}$
C_D
C_L
$\bar{V}$

a. Orbiter Axis Systems

Figure 1. - Axis systems and sign conventions

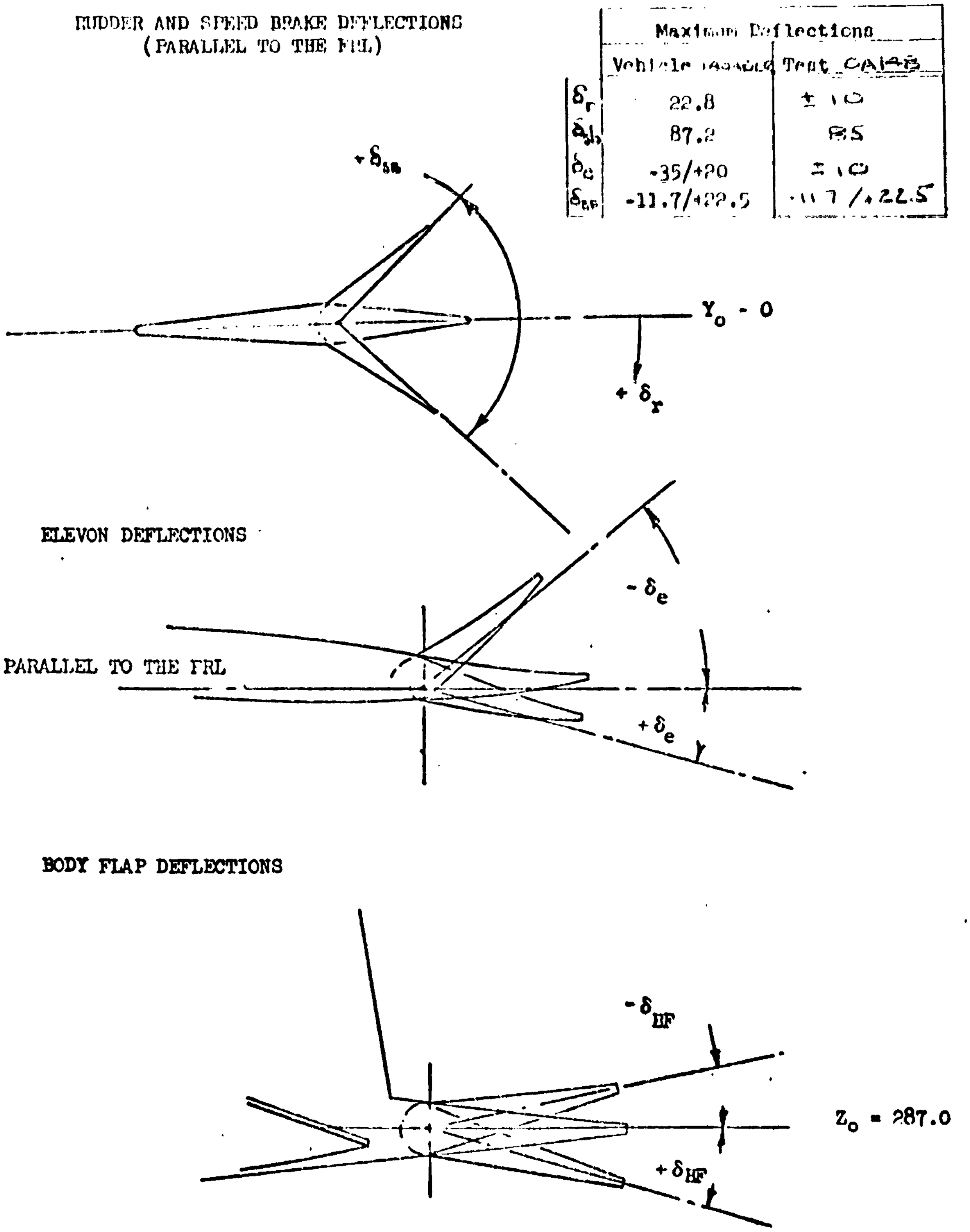
RUDDER AND SPEED BRAKE DEFLECTIONS
(PARALLEL TO THE FRL)
$+\delta_{sb}$
$Y_o = 0$
$+\delta_r$
ELEVON DEFLECTIONS
PARALLEL TO THE FRL
$-\delta_e$
$+\delta_e$
BODY FLAP DEFLECTIONS
$-\delta_{BF}$
$Z_o = 287.0$
$+\delta_{BF}$
$X_o = 1532$

	Maximum Deflections	
	Vehicle (140A/B)	Test OA148
δ_r	22.8	±10
δ_{sb}	87.2	85
δ_e	-35/+20	±10
δ_{BF}	-11.7/+22.5	-11.7/+22.5

b. Definition of Angular Measurements

Figure 1. - Continued.

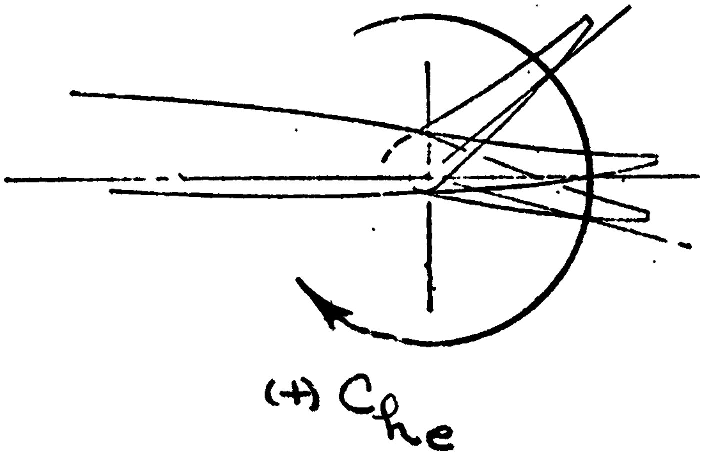

c. Elevon Hinge Moment Sign Convention

Figure 1. - Concluded.

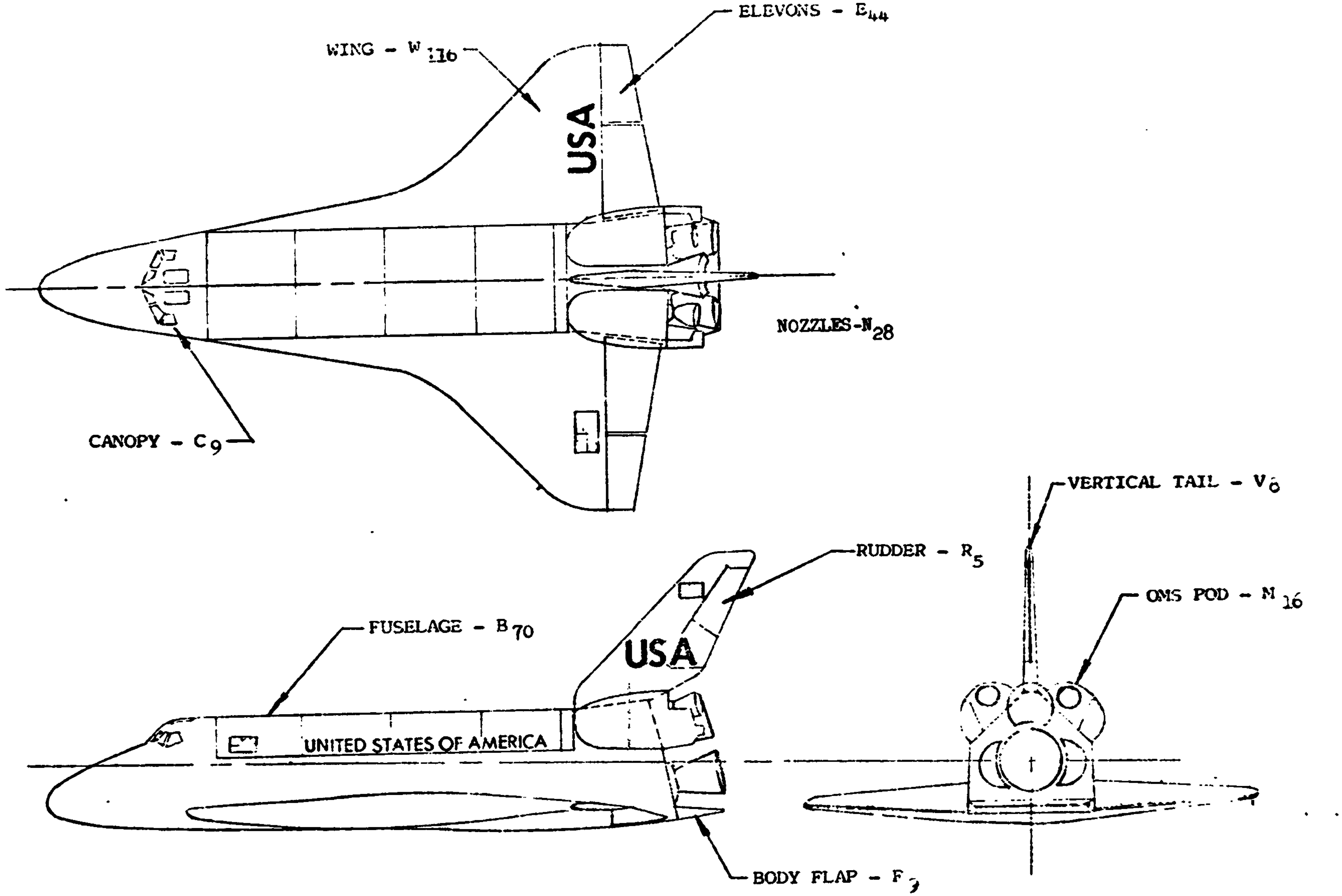
ELEVONS - E_{44}
WING - W_{116}
USA
NOZZLES-N_{28}
CANOPY - C_9
VERTICAL TAIL - V_6
RUDDER - R_5
OMS POD - N_{16}
FUSELAGE - B_{70}
USA
UNITED STATES OF AMERICA
BODY FLAP - F_3

a. Configuration - 140A/B/C/R

Figure 2. - Model sketches.

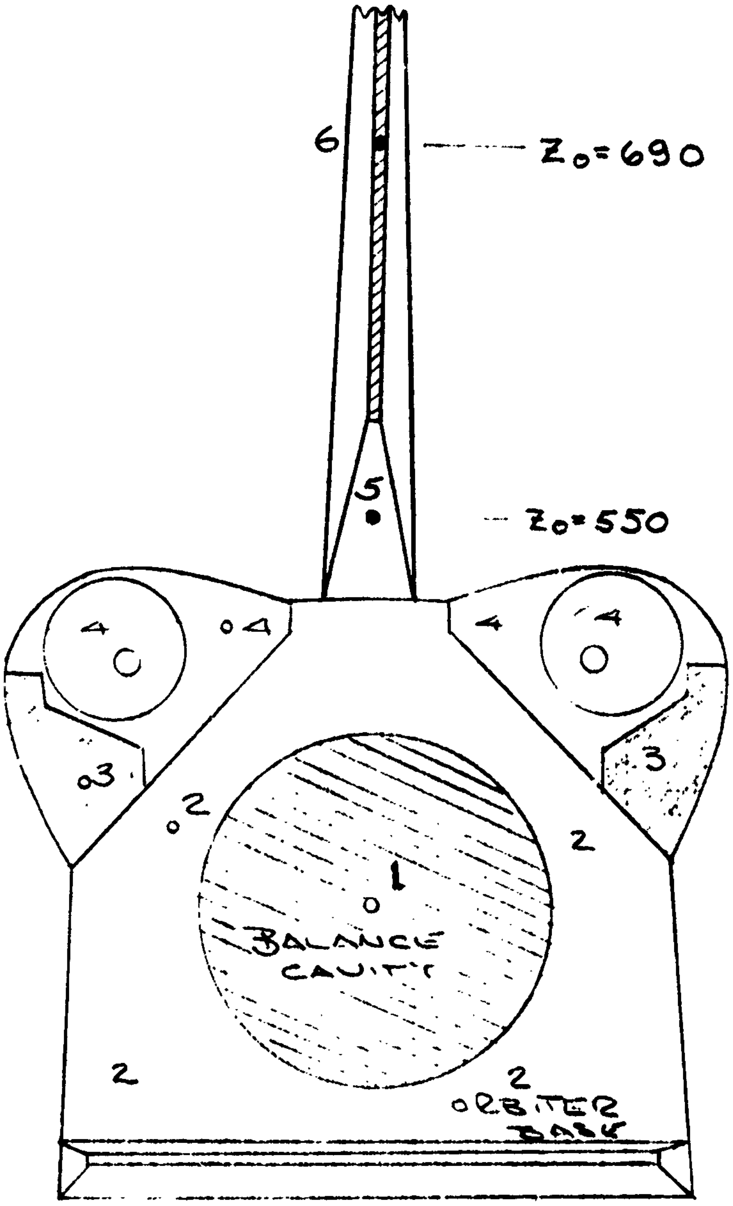
6
$Z_0=690$
5
$Z_0=550$
4
4
4
4
3
3
2
2
2
2
2
1
BALANCE CAVITY
ORBITER BASE

AREA NO.	PROJECTED AXIAL VALUE
A1	0 076699 ft^2
A2	0 215695 ft^2
A3	0 034072 ft^2
A4	0 074167 ft^2

b. Base Pressure Taps and Areas

Figure 2. - Continued.

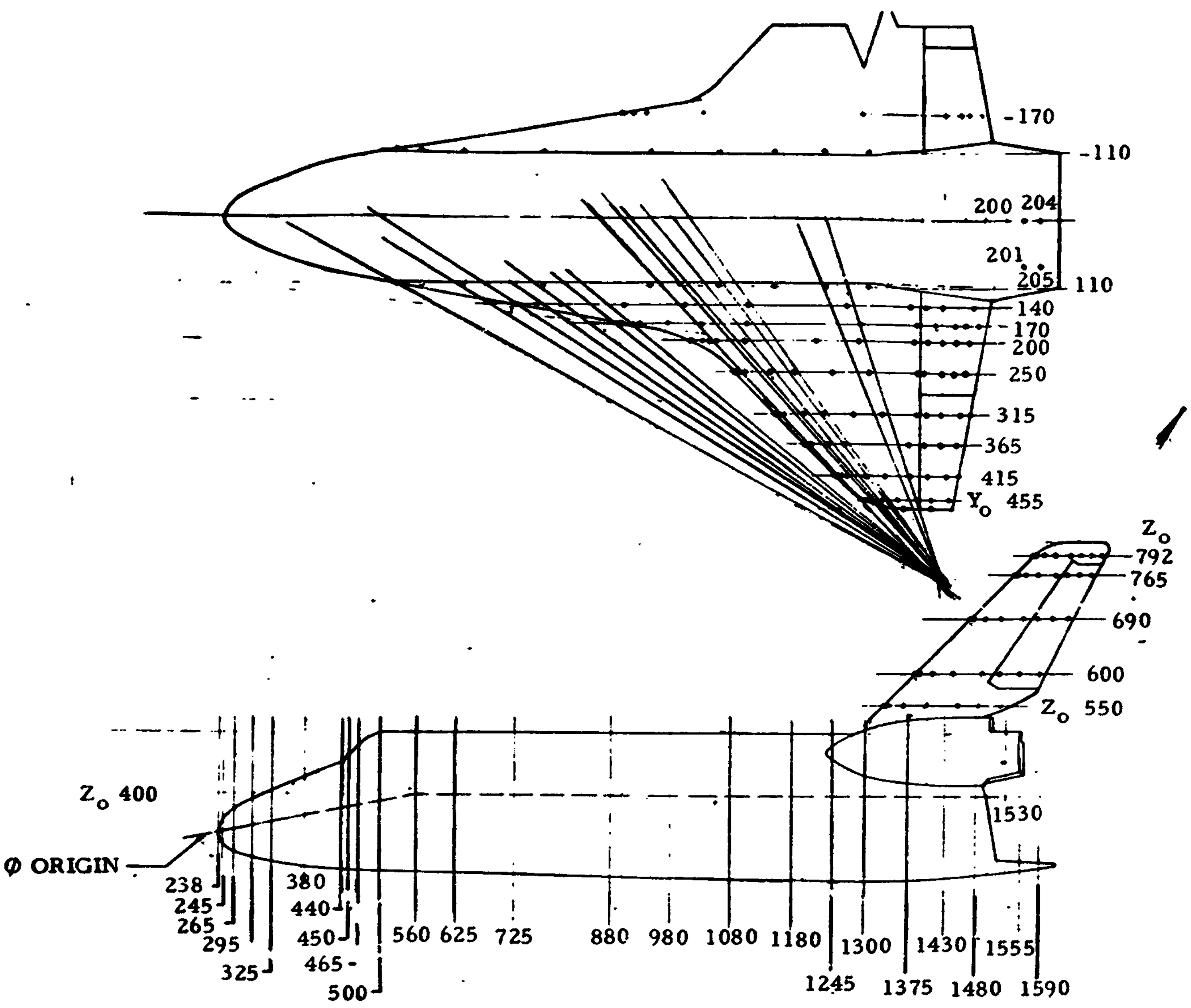
-170
-110
200 204
201
205
110
140
170
200
250
315
365
415
Y_o 455
Z_o
792
765
690
600
Z_o 550
Z_o 400
Φ ORIGIN
238
245
265
295
325
380
440
450
465-
500
560
625
725
880
980
1080
1180
1245
1300
1375
1430
1480
1555
1590
1530

c. Fuselage, Vertical Tail, and Wing Pressure Tap Locations
Figure 2. - Continued.

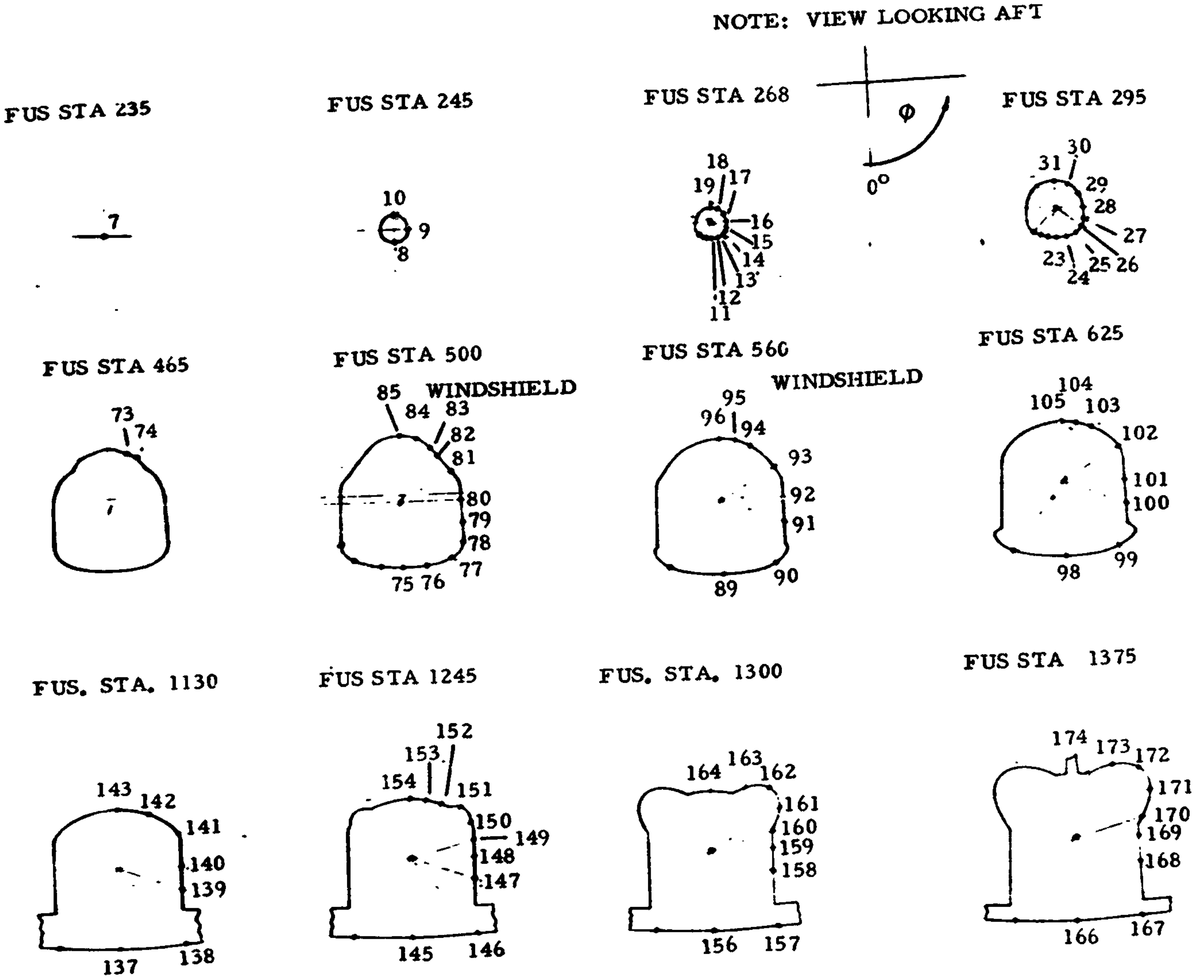
NOTE: VIEW LOOKING AFT
φ
0°
FUS STA 235
7
FUS STA 245
10
9
8
FUS STA 268
18
19
17
16
15
14
13
12
11
FUS STA 295
30
31
29
28
27
23
25
26
24
FUS STA 465
73
74
FUS STA 500
85
WINDSHIELD
84
83
82
81
80
79
78
77
75
76
FUS STA 560
95
WINDSHIELD
96
94
93
92
91
90
89
FUS STA 625
104
105
103
102
101
100
99
98
FUS. STA. 1130
143
142
141
140
139
138
137
FUS STA 1245
152
153
154
151
150
149
148
147
146
145
FUS. STA. 1300
164
163
162
161
160
159
158
157
156
FUS STA 1375
174
173
172
171
170
169
168
167
166

c. Fuselage, Vertical Tail, and Wing Pressure Tap Locations
Figure 2. - Continued.

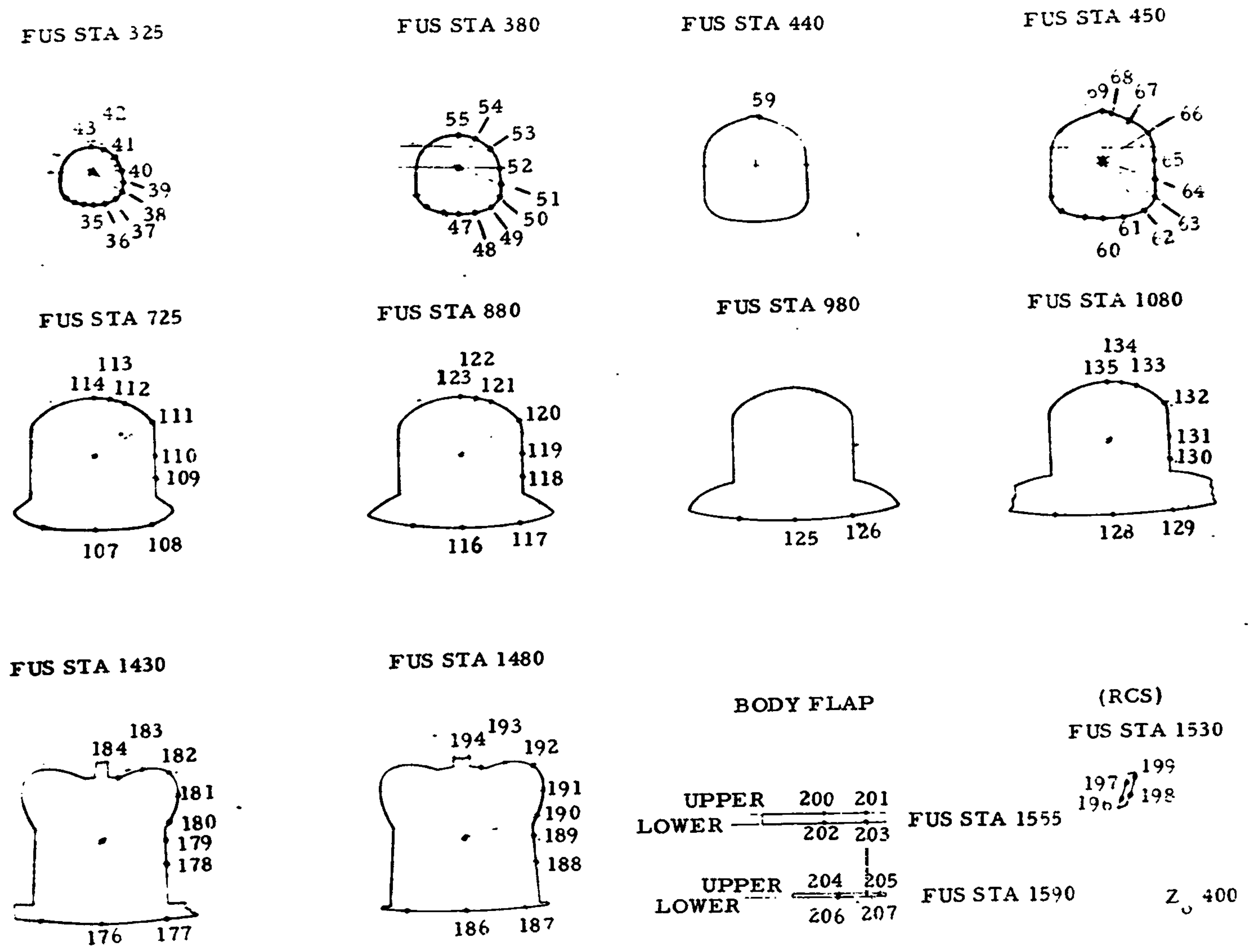
FUS STA 325
43
42
41
40
39
38
37
36
35
FUS STA 380
55
54
53
52
51
50
49
48
47
FUS STA 440
59
FUS STA 450
69
68
67
66
65
64
63
62
61
60
FUS STA 725
113
114
112
111
110
109
107
108
FUS STA 880
122
123
121
120
119
118
116
117
FUS STA 980
125
126
FUS STA 1080
134
135
133
132
131
130
128
129
FUS STA 1430
183
184
182
181
180
179
178
176
177
FUS STA 1480
193
194
192
191
190
189
188
186
187
BODY FLAP
UPPER
LOWER
200
201
202
203
FUS STA 1555
UPPER
LOWER
204
205
206
207
FUS STA 1590
(RCS)
FUS STA 1530
197
196
199
198
Z
400

c. Fuselage, Vertical Tail, and Wing Pressure Tap Locations
Figure 2. - Continued.

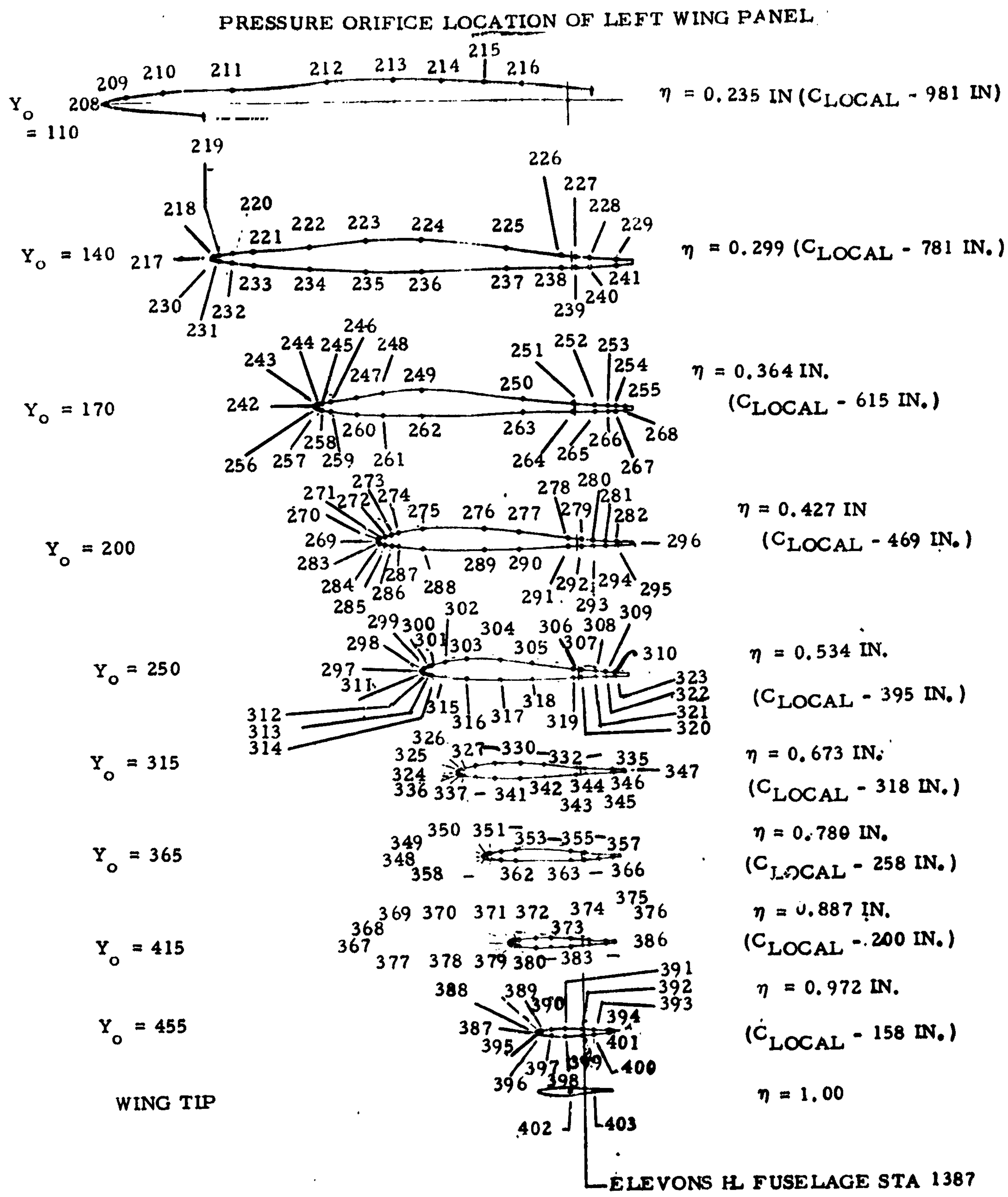
PRESSURE ORIFICE LOCATION OF LEFT WING PANEL
Y_o = 110
208 209 210 211 212 213 214 215 216 219
η = 0.235 IN (C$_{LOCAL}$ - 981 IN)
Y_o = 140
217 218 220 221 222 223 224 225 226 227 228 229
230 231 232 233 234 235 236 237 238 239 240 241
η = 0.299 (C$_{LOCAL}$ - 781 IN.)
Y_o = 170
242 243 244 245 246 247 248 249 250 251 252 253 254 255
256 257 258 259 260 261 262 263 264 265 266 267 268
η = 0.364 IN.
(C$_{LOCAL}$ - 615 IN.)
Y_o = 200
269 270 271 272 273 274 275 276 277 278 279 280 281 282 296
283 284 285 286 287 288 289 290 291 292 293 294 295
η = 0.427 IN
(C$_{LOCAL}$ - 469 IN.)
Y_o = 250
297 298 299 300 301 302 303 304 305 306 307 308 309 310
311 312 313 314 315 316 317 318 319 320 321 322 323
η = 0.534 IN.
(C$_{LOCAL}$ - 395 IN.)
Y_o = 315
324 325 326 327 330 332 335 347
336 337 341 342 343 344 345 346
η = 0.673 IN.
(C$_{LOCAL}$ - 318 IN.)
Y_o = 365
348 349 350 351 353 355 357
358 362 363 366
η = 0.780 IN.
(C$_{LOCAL}$ - 258 IN.)
Y_o = 415
367 368 369 370 371 372 373 374 375 376 386
377 378 379 380 383
η = 0.887 IN.
(C$_{LOCAL}$ - 200 IN.)
Y_o = 455
387 388 389 390 391 392 393 394 401
395 396 397 398 399 400
η = 0.972 IN.
(C$_{LOCAL}$ - 158 IN.)
WING TIP
402 403
η = 1.00
ELEVONS ℄ FUSELAGE STA 1387

c. Fuselage, Vertical Tail, and Wing Pressure Tap Locations
Figure 2. - Continued.

REPRODUCIBILITY OF THE
ORIGINAL PAGE IS POOR

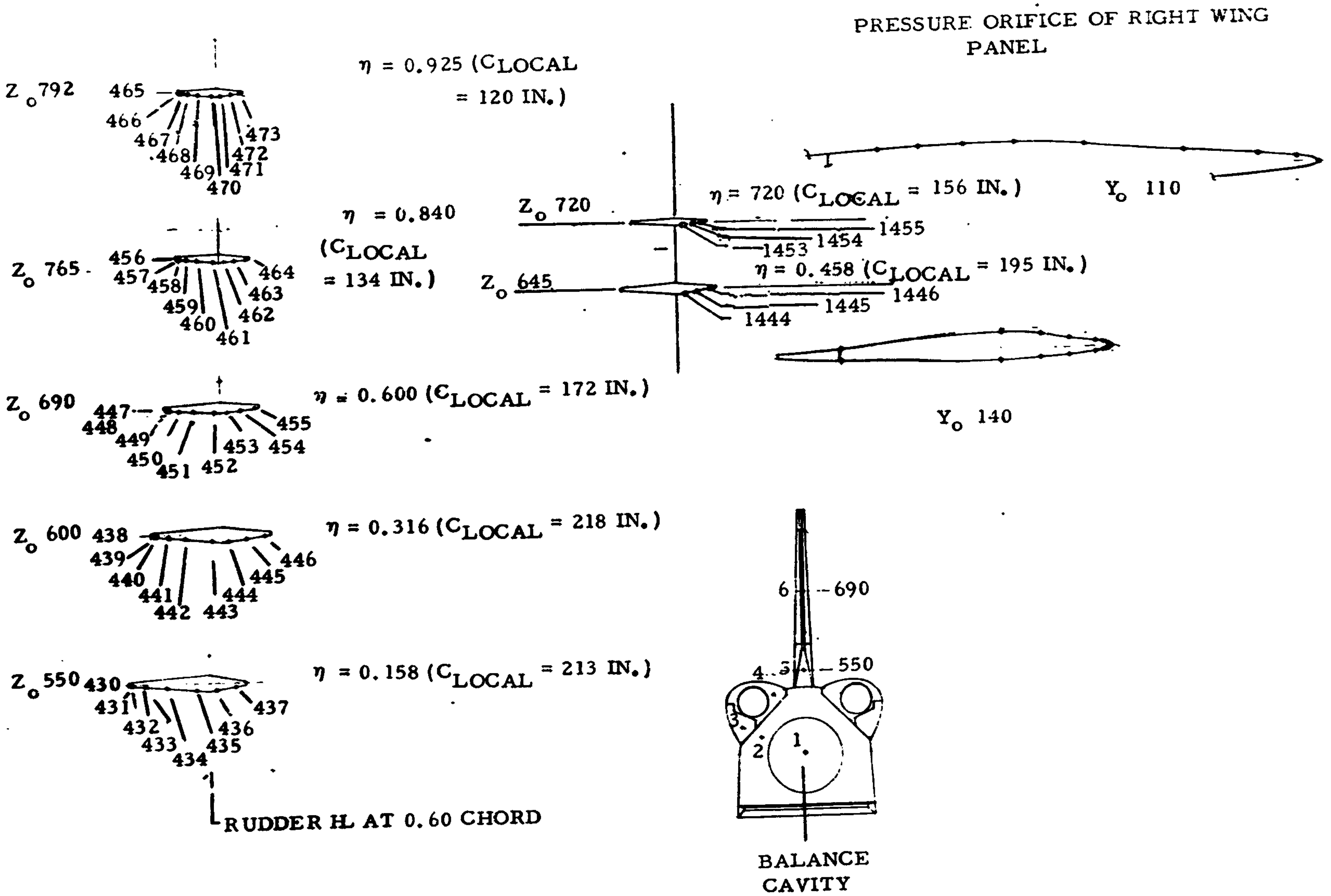
PRESSURE ORIFICE OF RIGHT WING PANEL
Z o 792
465
466
467
468
469
470
471
472
473
η = 0.925 (CLOCAL = 120 IN.)
Z o 765
456
457
458
459
460
461
462
463
464
η = 0.840 (CLOCAL = 134 IN.)
Z o 690
447
448
449
450
451
452
453
454
455
η = 0.600 (CLOCAL = 172 IN.)
Z o 600
438
439
440
441
442
443
444
445
446
η = 0.316 (CLOCAL = 218 IN.)
Z o 550
430
431
432
433
434
435
436
437
η = 0.158 (CLOCAL = 213 IN.)
RUDDER H.L AT 0.60 CHORD
Z o 720
η = 720 (CLOCAL = 156 IN.)
1453
1454
1455
Y o 110
Z o 645
η = 0.458 (CLOCAL = 195 IN.)
1444
1445
1446
Y o 140
6
690
4
5
550
3
2
1
BALANCE CAVITY

c. Fuselage, Vertical Tail, and Wing Pressure Tap Locations

Figure 2. - Concluded.

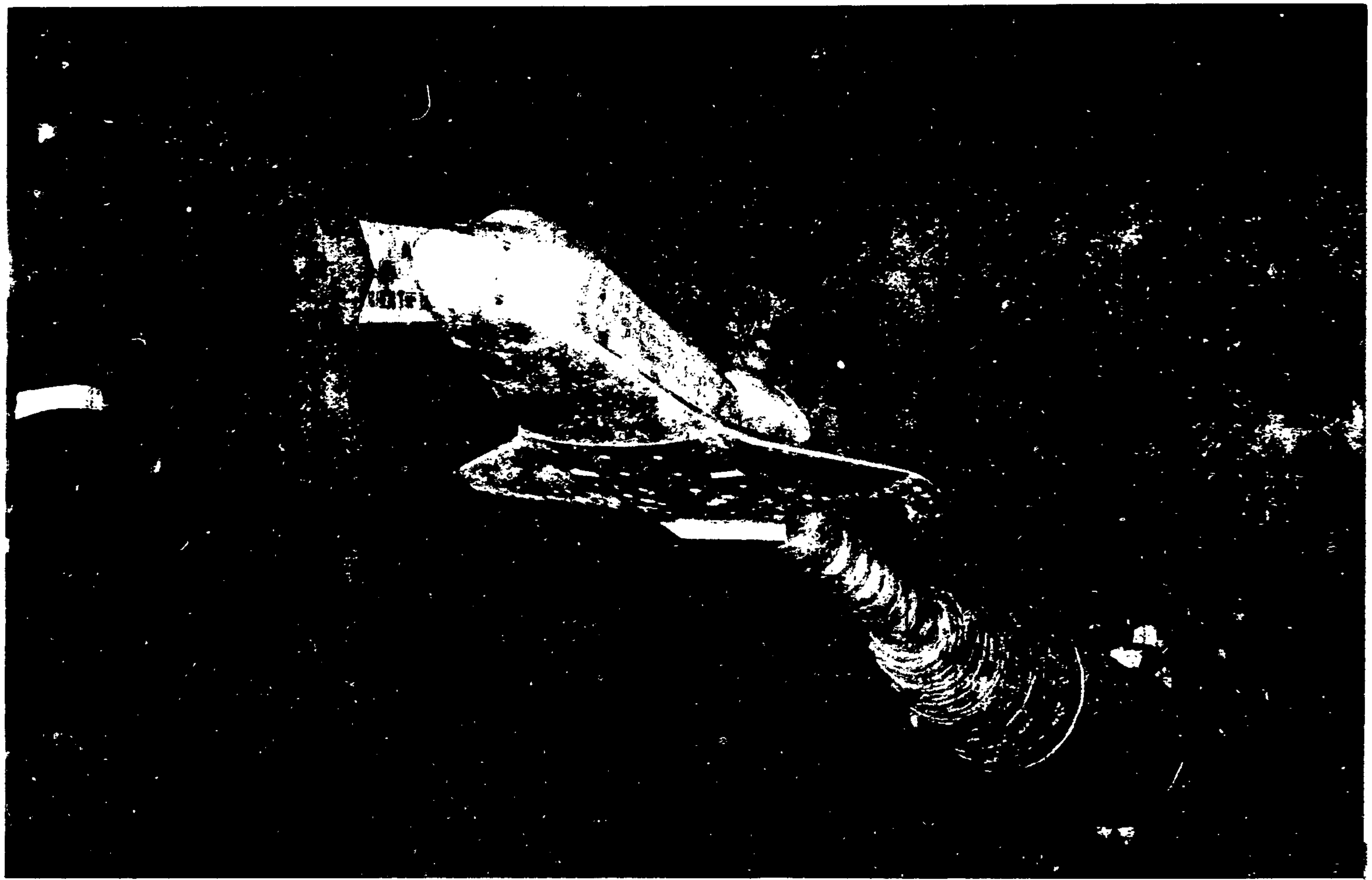

a. Three Quarter Front View of model 47-0 in the ARC 11 x 11 UPWT

Figure 3. - Model installation photographs.

REPRODUCIBIL
ORIGINAL P

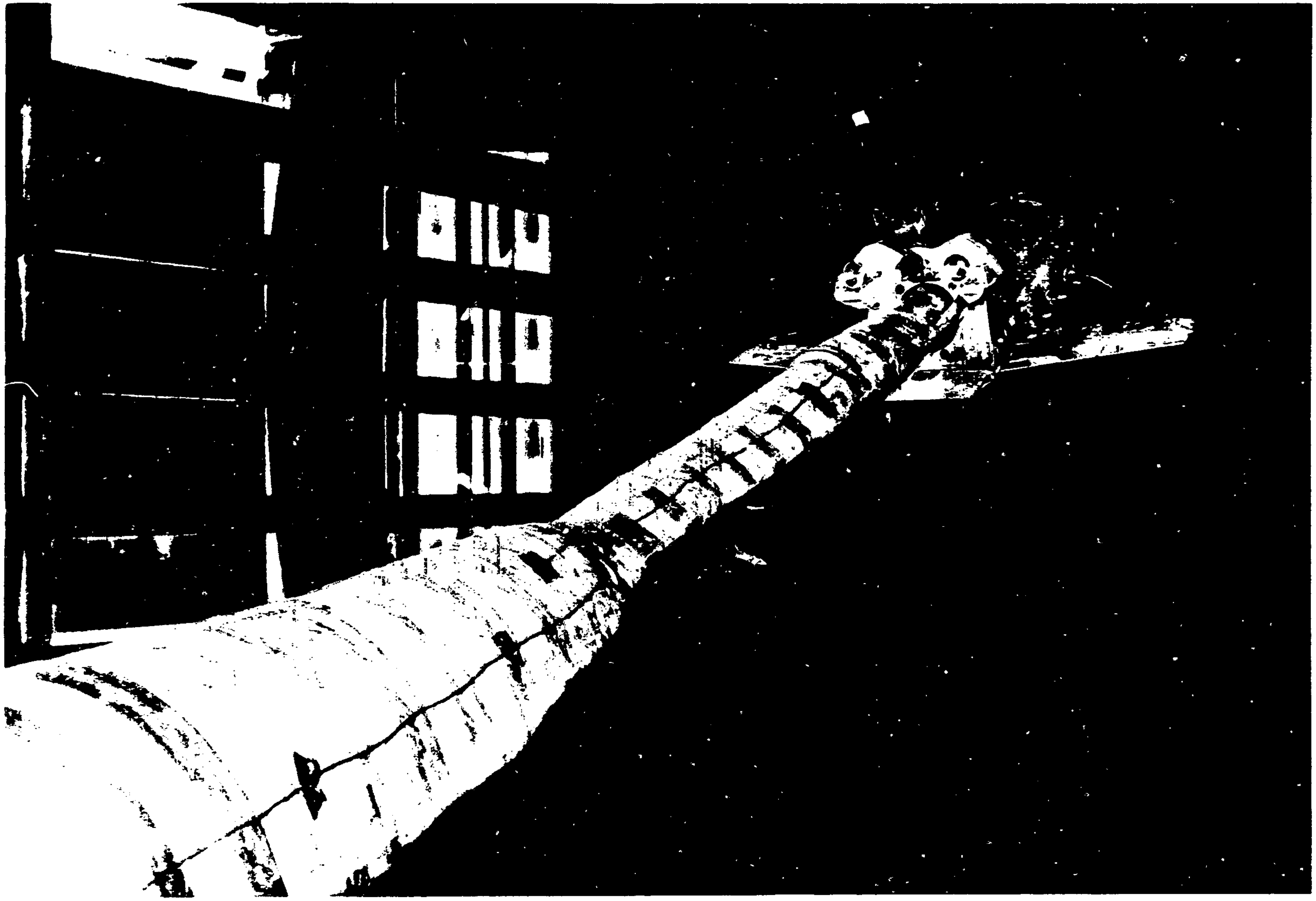

b. Three Quarter Rear View of Model 47-0 in the ARC 11 x 11 UPWT

Figure 3. - Concluded.

(Reverse of this page is blank.)

APPENDIX

VOLUME NO.		CONTENTS	PAGES
3		TABULATED FORCE DATA	1-723
		TABULATED PRESSURE DATA	
		COMPONENT	
4, 5		Orbiter fuselage	1-1270
6, 7, 8	(Note)	Lower wing	1271-3146
9, 10, 11	(Note)	Upper wing	3147- 5404
12		Upper body flap	5405-5773
12		Lower body flap	5774-6142
13		Speed brake	6143-6546
13		Vertical tail	6547-7114

Note: Data tabulated at 2Y/BW = .673, X/CW = .775, .850, .950 & 1.00 were actually located at 2Y/BW = .641, X/CW = .775, .850, .950 & 1.00 as shown in Table V on page 47.

PRECEDING PAGE BLANK NOT FILMED

AMES 11-073(OA148) -140A/B/C/P ORB LEFT WING BOT (XEBL28) (25 AUG 75)

REFERENCE DATA

```
SREF  =  2690.0000 SQ.FT.   XMRP  =  1076.6800 IN. XO
LREF  =   474.8000 IN.      YMRP  =      .0000 IN. YO
BREF  =   936.6800 IN.      ZMRP  =   375.0000 IN. ZO
SCALE =      .0300
```

PARAMETRIC DATA

```
RUDDER =  -10.000   SPDBRK =   35.000
BDFLAP =   16.300   L-ELVN =   10.000
R-ELVN =     .000   MACH   =    1.400
```

```
ALPHA ( 1) =   -3.978   BETA ( 1) =   -3.855   MACH  =  1.3927   Q  =  599.58   P  =  441.59   RN/L  =  2.9214
```

SECTION (1)LEFT WING BOT SURF DEPENDENT VARIABLE CP

2Y/BW	.2890	.3640	.4270	.5340	.6730	.7800	.8870	.9720
X/CW								
.010	-.1753	-.2454	-.1373	-.2755	-.3565	-.2199	-.1929	
.020	.3070	-.2329	-.2334	-.4133	-.3992	-.4093	-.4041	-.4561
.040		-.2283	-.3071					
.080	-.1573			-.4465	-.4268	-.4464	-.4353	
.099								-.4906
.090				-.4436				
.091			-.1934					
.096		-.1222						
.034	-.1435							
.150				-.4013	-.3887	-.3942	-.3968	
.157								-.3080
.163		-.0321						
.177			-.1750					
.223	-.1063							
.245		-.1139						
.250				-.2081	-.3627	-.3583	-.3696	
.274			-.1611					
.345								-.4324
.380		-.1392						
.400				-.1740	-.3107		-.3302	
.402			-.1517					
.503								-.4165
.550				-.1379	-.1592			
.565			-.2084					
.600							-.3233	
.627		-.0955						
.651						-.3210		
.670								-.3049
.700					-.2065			
.725				-.1740				
.750						.0116	-.1110	
.760			-.1844					
.775				.0420	.0398			
.798		-.1654						
.809			.0747					
.834	-.1839							
.839		.0528						
.850				-.0244	-.0847	-.0241		

AMES 11-073(OA148) -140A/B/C/R ORB LEFT WING BOT (XEBL28)

ALPHA (1) = -3.978 BETA (1) = -3.855

SECTION (1)LEFT WING BOT SURF DEPENDENT VARIABLE CP

2Y/BW	.2990	.3640	.4270	.5340	.6730	.7800	.8870	.9720
X/CW								
.857			.0070					
.862								-.3493
.865	.0592							
.879		-.0263						
.900	-.0571			-.1030			-.2232	
.905			-.0835					
.919		-.1019						
.950				-.1528	-.1171	-.1275		
.953			-.1467					
.955		-.1540						
.965	-.1452							
1.000			-.2222		-.1107		-.3564	

ALPHA (1) = -3.971 BETA (2) = .185 MACH = 1.3927 Q = 599.58 P = 441.59 RN/L = 2.9214

SECTION (1)LEFT WING BOT SURF DEPENDENT VARIABLE CP

2Y/BW	.2990	.3640	.4270	.5340	.6730	.7800	.8870	.9720
X/CW								
.010	-.0995	-.1126	-.0493	-.2740	-.3768	-.2593	-.2409	
.020	.0000	-.1157	-.1200	-.4111	-.4104	-.4376	-.4326	-.5023
.040		-.1131	-.1743					
.050	-.1038			-.4300	-.4359	-.4676	-.4610	
.069								-.5144
.080				-.3899				
.081			-.1535					
.086		-.0521						
.094	-.0924							
.150				-.3086	-.3982	-.4116	-.4252	
.157								-.3192
.163		.0152						
.177			-.1308					
.229	-.0706							
.246		-.0760						
.250				-.1574	-.3599	-.3709	-.3968	
.274			-.1261					
.345								-.4617
.380		-.0354						
.400				-.1408	-.1543		-.3485	
.472			-.1152					
.503								-.4501
.550				-.1073	-.1364			
.565			-.3064					
.600							-.3244	

```
                              AMES 11-073(OA148) -140A/B/C/R ORB LEFT WING BOT                    (XEE228)

ALPHA ( 1) =    -3.971     BETA  ( 2) =      .185

 SECTION ( 1)LEFT WING BOT SURF                  DEPENDENT VARIABLE CP

2Y/BW            .2990     .3540     .4270     .5340     .6730     .7800     .8870     .9720

  X/CW
   .637                   -.0732
   .650                                                             -.1808
   .670                                                                                 -.3297
   .700                                                   -.1735
   .725                                         -.1591
   .750                                                              .0994    -.0538
   .760                             -.1712
   .775                                          .0611     .0358
   .790                   -.1565
   .808                              .0880
   .834         -.1676
   .839                    .0583
   .850                                          .0003    -.0729     .0014
   .857                              .0154
   .862                                                                                 -.3578
   .865          .0415
   .879                   -.0250
   .900         -.0760                          -.0851                        -.0851
   .905                             -.0732
   .919                   -.1068
   .950                                         -.1459    -.1103    -.1134
   .953                             -.1433
   .955                   -.1535
   .965         -.1538
  1.000                             -.2445              -.1449              -.2122
ALPHA ( 1) =    -3.978     BETA  ( 3) =     4.270    MACH   =  1.3927     Q    =  599.58     P    =  [illegible].59    RN/L   =  2.9214

 SECTION ( 1)LEFT WING BOT SURF                  DEPENDENT VARIABLE CP

2Y/BW            .2990     .3540     .4270     .5340     .6730     .7800     .8870     .9720

  X/CW
   .010         -.0775    -.0332     .0409    -.2678    -.3355    -.2919    -.2772
   .020          .0000    -.0484     .0068    -.3914    -.4219    -.4552    -.4567    -.5245
   .040                   -.0427    -.0739
   .050         -.0775                          -.3550    -.4422    -.4799    -.4825
   .069                                                                                 -.5207
   .090                                         -.3407
   .091                             -.0930
   .095                   -.0035
   .094         -.0885
   .150                                         -.1843    -.3947    -.4187    -.4399
   .157                                                                                 -.3254
   .163                    .0482
```

REPRODUCIBILITY OF THE
ORIGINAL PAGE IS POOR

```
DATE 10 FEB 76              TABULATED PRESSURE DATA - OA148 ( AMES 11-073-1 )

                                  AMES 11-073(OA148) -140A/B/C/R ORB LEFT WING BOT           (XEBL28)
ALPHA ( 1) =    -3.978    BETA  ( 3) =    4.270

 SECTION ( 1)LEFT WING BOT SURF                   DEPENDENT VARIABLE CP

2Y/BW       .2930     .3540     .4270     .5340     .6730     .7800     .8870     .9720

  X/CW
    .177                       -.0978
    .229   -.0520
    .246             -.0439
    .250                                 -.1323    -.1808    -.3656    -.4055
    .274                       -.0883
    .345                                                                         -.4590
    .390             -.0623
    .400                                 -.1046    -.1293              -.3536
    .402                       -.0845
    .503                                                                         -.4158
    .550                                 -.0900    -.1018
    .565                       -.3119
    .600                                                               -.1607
    .637             -.0616
    .640                                                     -.1496
    .670                                                                         -.2155
    .700                                           -.1514
    .725                                 -.1442
    .750                                                      .1149     .1190
    .760                       -.1635
    .775                                  .0771     .0554
    .799             -.1422
    .808                        .0946
    .834   -.1669
    .839              .0415
    .850                                  .0240    -.0596     .0149
    .857                        .0037
    .862                                                                         -.1477
    .865    .0739
    .879             -.0282
    .900   -.0712                        -.0670                        -.0324
    .905                       -.0784
    .913             -.1055
    .920                                 -.1428    -.0847    -.0913
    .953                       -.1444
    .955             -.1457
    .965   -.1541
   1.000                       -.2383              -.1687              -.1801
```

```
                          AMES 11-073(OA148) -140A/B/C/R ORB LEFT WING BOT              (XE8L28)

ALPHA ( 2) =    -.069    BETA  ( 1) =   -3.876   MACH   =  1.3934    Q      =  600.11    P      =  441.59    RN/L   =  2.9212

 SECTION ( 1)LEFT WING BOT SURF                DEPENDENT VARIABLE CP

2Y/BW        .2990     .3640     .4270     .5340     .6730     .7800     .8870     .9720

  X/CW
   .010    -.0057     .0135     .2067    -.0886    -.1833    -.1060    -.0265
   .020     .0000    -.0188     .1469    -.2220    -.2300    -.2399    -.2581    -.2223
   .040              -.0205     .0126
   .050    -.0318                        -.2268    -.2383    -.2692    -.2746
   .069                                                                          -.2511
   .080                                  -.1813
   .081                        -.0371
   .086               .0234
   .094    -.0505
   .150                                  -.1298    -.1815    -.2007    -.2211
   .157                                                                          -.1940
   .163               .0969
   .177                        -.0423
   .229    -.0410
   .246              -.0141
   .250                                  -.0595    -.1353    -.1571    -.1888
   .274                        -.0510
   .345                                                                          -.1543
   .370              -.0356
   .400                                  -.0624    -.0472              -.1470
   .402                        -.0466
   .500                                                                          -.1710
   .550                                  -.0380    -.0477
   .565                        -.3444
   .600                                                                .1205
   .637              -.0238
   .650                                                      -.0921
   .670                                                                           .0217
   .700                                            -.1192
   .725                                  -.0996
   .750                                                       .2045     .2000
   .760                        -.1272
   .775                                   .1567     .1271
   .798              -.1191
   .808                         .1633
   .834    -.1363
   .838               .1424
   .850                                   .0654     .0031     .0844
   .857                         .0917
   .862                                                                          -.0959
   .865     .1571
   .879               .0468
   .900    -.0068                        -.0276                         .0126
   .905                        -.0089
   .919              -.0356
```

AMES 11-073(OA148) -140A/B/C/R ORB LEFT WING BOT (XEBL28)

ALPHA (2) = -.069 BETA (1) = -3.876

SECTION (1)LEFT WING BOT SURF DEPENDENT VARIABLE CP

2Y/BW	.2990	.3640	.4270	.5340	.6730	.7800	.8870	.9720
X/CW								
.950				-.0793	-.0538	-.0688		
.953			-.0831					
.955		-.1101						
.965	-.1038							
1.000			-.1637		-.1171		-.3339	

ALPHA (2) = -.045 BETA (2) = .182 MACH = 1.3934 Q = 600.11 P = 441.59 RN/L = 2.9212

SECTION (1)LEFT WING BOT SURF DEPENDENT VARIABLE CP

2Y/BW	.2990	.3540	.4270	.5340	.6730	.7800	.8870	.9720
X/CW								
.010	-.0129	.0003	.2431	-.0855	-.2002	-.1428	-.0727	
.020	.0000	-.0040	.2153	-.1901	-.2328	-.2617	-.2839	- 2550
.040		.0031	.0677					
.050	-.0290			-.1154	-.1924	-.2714	-.2988	
.069								-.2623
.080				-.1121				
.081			.0068					
.086		.0428						
.094	-.0397							
.150				-.0815	-.1384	-.1815	-.2242	
.157								-.1927
.163		.1165						
.177			-.0147					
.229	-.0390							
.246		.0107						
.250				-.0392	-.0578	-.1181	-.1937	
.274			-.0161					
.345								-.1198
.340		-.0094						
.400				-.0349	-.0372		-.0716	
.402			-.0258					
.503								-.1044
.550				-.0219	-.0298			
.565			-.3599					
.600							-.0796	
.637		-.0056						
.650						-.0791		
.670								.0575
.700					-.1015			
.725				-.0921				
.750						.2091	.1942	
.750			-.1148					

```
                                 AMES 11-073(OA148) -140A/B/C/R ORB LEFT WING BOT                    (XE8L28)
ALPHA ( 2) =    -.045    BETA  ( 2) =     .182
 SECTION ( 1)LEFT WING BOT SURF                    DEPENDENT VARIABLE CP
2Y/BW        .2990   .3640   .4270   .5340   .6730   .7800   .8870   .9720
  X/CW
    .775
    .798             -.1089          .1720   .1493
    .808                     .1862
    .834    -.1210
    .839              .1530
    .850
    .857                             .0881   .0061   .0830
    .862                     .1017
    .865     .1422                                                   -.1086
    .873              .0454
    .900    -.0062
    .905                     -.0036  -.0112                  .0120
    .919             -.0428
    .950
    .953                             -.0763  -.0469  -.0582
    .955                     -.0936
    .955             -.1082
    .965    -.1101
   1.000                     -.1693          -.1020          -.3357
ALPHA ( 2) =    -.049    BETA  ( 3) =    4.247   MACH   =  1.3934    Q     =  600.11    P     =  441.59    RN/L  =  2.9212
 SECTION ( 1)LEFT WING BOT SURF                    DEPENDENT VARIABLE CP
2Y/BW        .2990   .3640   .4270   .5340   .6730   .7800   .8870   .9720
  X/CW
    .010    -.0752  -.0623   .2671  -.0342  -.1806  -.1617  -.0973
    .020     .0000  -.0361   .2470  -.0233  -.1216  -.2517  -.2964  -.1992
    .040            -.0200   .1133
    .050    -.0551
    .069                             -.0831  -.1868  -.2352  -.2896
    .080                                                             -.1921
    .081                             -.0641
    .086                     .0398
    .094             .0426
    .150    -.0535
    .157                             -.0437  -.0840  -.1356  -.2056
    .163             .1175                                           -.1649
    .177                     .0055
    .223    -.0481
    .246             .0270
    .250
    .274                     .0097   -.0183  -.0435  -.0419  -.0759
    .345
    .390             .0117                                           -.0585
```

REPRODUCIBILITY OF THE
ORIGINAL PAGE IS POOR

```
                              AMES 11-073(OA148) -140A/B/C/R ORB LEFT WING BOT                 (XEBL28)
ALPHA ( 2) =    -.049    BETA  ( 3) =    4.247
 SECTION ( 1)LEFT WING BOT SURF                     DEPENDENT VARIABLE CP
2Y/BW       .2990   .3640   .4270   .5340   .6730   .7800   .8870   .9720
  X/CW
   .400
   .402                    -.0010  -.0075  -.0120          -.0536
   .503
   .550                                                            -.0995
   .565                            -.0115  -.0094
   .600                    -.3563
   .637             .0041                                  -.0622
   .650
   .670                                            -.0601
   .700                                                             .0710
   .725                                    -.0863
   .750                            -.0815
   .760                                             .2270   .2076
   .775                    -.1080
   .798            -.0980           .1914   .1628
   .819                     .1943
   .834    -.1169
   .839             .1299
   .850
   .857                             .1102   .0148   .0830
   .862                     .0916
   .965     .1395                                                  -.1054
   .879             .0391
   .900    -.0079
   .905                             .0020                   .0100
   .919                    -.0091
   .950            -.0466
   .953                            -.0787  -.0233  -.0306
   .955                    -.0842
   .965    -.1140  -.0976
  1.000                    -.1496          -.1077          -.2962
ALPHA ( 3) =    3.888    BETA  ( 1) =   -3.879   MACH   =  1.3920    Q     =  599.57    P     =  442.06    RN/L   =  2.9184
 SECTION ( 1)LEFT WING BOT SURF                     DEPENDENT VARIABLE CP
2Y/BW       .2990   .3640   .4270   .5340   .6730   .7800   .8870   .9720
  X/CW
   .010     .0550   .0134   .3951   .2481   .1777   .1759   .2077
   .020     .0020   .0323   .3705   .1717   .1658   .0864   .0352   .0885
   .040                     .0479   .2057
   .050     .0429                   .0487   .0234   .0216   .0307
   .069
   .080                             .0499                           .0559
```

AMES 11-073(OA148) -140A/B/C/R ORB LEFT WING BOT (XE6L28)

ALPHA (3) = 3.898 BETA (1) = -3.879

SECTION (1)LEFT WING BOT SURF DEPENDENT VARIABLE CP

2Y/BW	.2990	.3640	.4270	.5340	.6730	.7800	.8870	.9720
X/CW								
.081			.1224					
.086		.1065						
.094	.0266							
.150				.0504	.0603	.0667	.0769	
.157								-.0692
.163		.1970						
.177			.0841					
.229	.0240							
.246		.0775						
.250				.0760	.0697	.0839	.0546	
.274			.0699					
.345								.0286
.390		.0694						
.400				.0666	.0780		.0592	
.402			.0626					
.503								-.0087
.540				.0688	.0823			
.565			-.4005					
.600							.0303	
.637		.0616						
.650						.0142		
.670								.1735
.700					-.0211			
.725				-.0170				
.750						.4042	.3207	
.760			-.0618					
.775				.2801	.2723			
.798		-.0574						
.808			.2721					
.834	-.0748							
.839		.2360						
.850				.1635	.0820	.1755		
.857			.1885					
.862								-.0052
.865	.2496							
.879		.1263						
.900	.0573			.0643			.0989	
.905			.0633					
.919		.0313						
.950				-.0078	.0288	.0059		
.953			-.0224					
.955		-.0618						
.965	-.0686							
1.000			-.1048		-.2180		-.3958	

AMES 11-073(OA148' -140A/B/C/R ORB LEFT WING BOT (XEBL28)

ALPHA (3) = 3.892 BETA (2) = .179 MACH = 1.3920 Q = 599.57 P = 442.06 RN/L = 2.9184

SECTION (1)LEFT WING BOT SURF DEPENDENT VARIABLE CP

2Y/BW	.2990	.3640	.4270	.5340	.6730	.7800	.8870	.9720
X/CW								
.010	-.0323	-.1446	.3435	.2969	.1974	.1831	.1976	
.020	.0000	-.0599	.3472	.2167	.1736	.1086	.0496	.0578
.040		-.0298	.2243					
.050	.0095			.1027	.0541	.0830	.0465	
.069								.0339
.080				.0897				
.081			.1458					
.085		.0620						
.094	.0027							
.150				.0711	.0786	.0880	.1028	
.157								-.0791
.163		.1772						
.177			.0910					
.229	.0027							
.246		.0885						
.250				.0863	.0824	.0911	.0656	
.274			.0896					
.345								-.0036
.390		.0797						
.400				.0764	.0904		.0607	
.402			.0697					
.503								-.0291
.550				.0757	.0862			
.565			-.4034					
.600							.0107	
.637		.0698						
.650						.0188		
.670								.1666
.700					-.0205			
.725				-.0149				
.750						.3885	.3127	
.760			-.0485					
.775				.2933	.2670			
.798		-.0453						
.808			.2929					
.844	-.0564							
.849		.2395						
.850				.1832	.0871	.1604		
.857			.1952					
.862								-.0277
.865	.2399							
.879		.1211						
.900	.0542			.0686			.0727	
.905			.0650					
.919		.0283						

```
                                 AMES 11-073(OA148) -140A/B/C/R ORB LEFT WING BOT                (XEBL28)

ALPHA ( 3) =     3.892    BETA  ( 2) =      .179

 SECTION ( 1)LEFT WING BOT SURF                   DEPENDENT VARIABLE CP

2Y/BW         .2990     .3640     .4270     .5340     .6730     .7800     .8870     .9720

  X/CW
    .950                                   -.0059     .0362     .0169
    .953                         -.0256
    .955               -.0517
    .965     -.0538
   1.000                         -.1400               -.1591              -.4186

ALPHA ( 3) =     3.996    BETA  ( 3) =     4.241    MACH   =  1.3920     Q      =  599.57     P      =  442.06     RN/L   =  2.9184

 SECTION ( 1)LEFT WING BOT SURF                   DEPENDENT VARIABLE CP

2Y/BW         .2990     .3640     .4270     .5340     .6730     .7800     .8870     .9720

  X/CW
    .010     -.1613    -.3744     .2613     .3338     .2318     .2105     .2317
    .020      .0000    -.1898     .2361     .2634     .2020     .1458     .1166     .0014
    .040               -.1449     .2263
    .050     -.0533                         .1511     .0993     .1091     .1062
    .069                                                                         -.0005
    .080                                    .1319
    .081                          .1479
    .086               -.0112
    .094     -.0430
    .150                                    .0892     .1074     .1139     .1194
    .157                                                                         -.0937
    .163                .1447
    .177                          .1011
    .229     -.0248
    .246                .0923
    .250                                    .0970     .0939     .1025     .0740
    .274                          .1025
    .345                                                                         -.0284
    .390                .0892
    .400                                    .0930     .1157               .0763
    .402                          .0836
    .503                                                                         -.0225
    .550                                    .0804     .0937
    .555                         -.4017
    .600                                                                .0269
    .637                .0830
    .650                                                        .0270
    .670                                                                          .1398
    .700                                              -.0112
    .725                                   -.0088
    .750                                                        .3697     .3164
    .760                         -.0409
```

AMES 11-073(OA148) -140A/B/C/R ORB LEFT WING BOT (XEBL28)

ALPHA (3) = 3.896 BETA (3) = 4.241

SECTION (1)LEFT WING BOT SURF DEPENDENT VARIABLE CP

2Y/BW	.2990	.3640	.4270	.5340	.6730	.7800	.8870	.9720
X/CW								
775				.3202	.2807			
.798		-.0293						
.808			.2916					
.834	-.0510							
.839		.2149						
.850				.1996	.1084	.1539		
.857			.1815					
.862								-.0480
.865	.2237							
.879		.1110						
.900	.0679			.0719			.0503	
.305			.0598					
.919		.0214						
.950				-.0142	.0435	.0367		
.953			-.0215					
.955		-.0400						
.965	-.0531							
1.000			-.1539		-.1557		-.3818	

ALPHA (4) = 7.940 BETA (1) = -3.870 MACH = 1.3916 Q = 599.57 P = 442.30 RN/L = 2.9184

SECTION (1)LEFT WING BOT SURF DEPENDENT VARIABLE CP

2Y/BW	.2990	.3640	.4270	.5340	.6730	.7800	.8870	.9720
X/CW								
.010	.0106	-.1247	.4280	.5127	.4563	.5218	.5360	
.020	.0000	.0052	.4561	.3839	.4041	.4054	.4038	.1353
.040		.0429	.3501					
.050	.0856			.2766	.2755	.3160	.3587	
.069								.1516
.080				.2424				
.081			.2618					
.086		.1529						
094	.0818							
.150				.1950	.2555	.2824	.2914	
.157								-.0322
.163		.2863						
.177			.1999					
.229	.0851							
.243		.1740						
.250				.2098	.2238	.2493	.2221	
.274			.1940					
.345								.1039
.350		.1777						

AMES 11-073(OA148) -140A/B/C/R ORB LEFT WING BOT (XEBL28)

ALPHA (4) = 7.940 BETA (1) = -3.870

SECTION (1)LEFT WING BOT SURF DEPENDENT VARIABLE CP

2Y/BW	.2990	.3640	.4270	.5340	.6730	.7800	.8870	.9720
X/CW								
.400				.1965	.2491		.2030	
.402			.1751					
.503								.0925
.550				.1805	.1970			
.565			-.4436					
.600							.1197	
.637		.1568						
.650						.1223		
.670								.2586
.700					.0543			
.725				.0634				
.750						.4747	.4580	
.760			.0171					
.775				.4215	.3792			
.799		.0170						
.808			.4044					
.844	-.0028							
.859		.3597						
.850				.2659	.1852	.2403		
.857			.2894					
.852								.0502
.865	.3629							
.879		.2167						
.900	.1413			.1614			.1552	
.905			.1305					
.919		.0957						
.950				.0757	.1201	.0918		
.953			.0471					
.955		.0005						
.965	-.0130							
1.000			-.1479		-.2942		-.4825	

ALPHA (4) = 7.946 BETA (2) = .176 MACH = 1.3916 Q = 599.57 P = 442.30 RN/L = 2.9164

SECTION (1)LEFT WING BOT SURF DEPENDENT VARIABLE CP

2Y/BW	.2990	.3640	.4270	.5340	.6730	.7800	.8870	.9720
X/CW								
.010	-.1339	-.3422	.2775	.5213	.4648	.5318	.5290	
.020	.0000	-.1247	.3571	.4178	.4171	.4349	.4164	.0215
.040		-.0737	.3243					
.050	.0198			.3160	.2960	.3312	.3693	
.059								.0629
.070				.2690				

REPRODUCIBILITY OF THE
ORIGINAL PAGE IS POOR

AMES 11-073(OA148) -140A/B/C/R ORB LEFT WING BOT (XEBL28)

ALPHA (4) = 7.946 BETA (2) = .176

SECTION (1)LEFT WING BOT SURF DEPENDENT VARIABLE CP

2Y/BW	.2990	.3640	.4270	.5340	.6730	.7800	.8870	.9720
X/CW								
.081			.2433					
.086		.0695						
.094	.0348							
.150				.2045	.2636	.2853	.2924	
.157								-.0516
.163		.2369						
.177			.1951					
.229	.0551							
.246		.1591						
.250				.2097	.2340	.2477	.2205	
.274			.1968					
.345								.0647
.390		.1761						
.400				.1959	.2444		.2167	
.402			.1802					
.503								.0623
.550				.1792	.1968			
.565			-.4522					
.600							.1060	
.637		.1598						
.650						.1193		
.670								.2137
.700					.0698			
.725				.0661				
.750						.4600	.4335	
.760			.0314					
.775				.4386	.3833			
.798		.0373						
.808			.4138					
.834	.0213							
.839		.3403						
.850				.2787	.1987	.2430		
.857			.2851					
.862								.0119
.865	.3423							
.879		.2077						
.900	.1511			.1522			.1114	
.905			.1372					
.919		.1031						
.950				.0744	.1289	.0980		
.953			.0506					
.955		.0231						
.965	.0156							
1.000			-.1724		-.2599		-.4852	

```
DATE 10 FEB 76            TABULATED PRESSURE DATA - OA148 ( AMES 11-073-1 )

                                 AMES 11-073(OA148) -140A/B/C/R ORB LEFT WING BOT              (XESL23)

ALPHA ( 4) =     7.949    BETA   ( 3) =     4.238   MACH    =  1.3916     Q      =  599.57     P      =  442.30     RN/L    =  2.9184

 SECTION ( 1)LEFT WING BOT SURF             DEPENDENT VARIABLE CP

2Y/BW         .2990     .3640     .4270     .5340     .6730     .7800     .8870     .9720

  X/CW
    .010     -.2897    -.4303     .0952     .4954     .4536     .5077     .5091
    .020      .0000    -.2215     .2124     .4176     .4137     .4350     .4286    -.1046
    .040               -.1676     .2521
    .050     -.0555                         .3193     .3096     .3323     .3740
    .059                                                                          -.0241
    .080                                    .2526
    .081                          .1982
    .086                .0017
    .094     -.0198
    .150                                    .2055     .2650     .2771     .2870
    .157                                                                          -.0807
    .163                .1772
    .177                          .1734
    .229      .0223
    .240                .1355
    .250                                    .1936     .2274     .2477     .2323
    .274                          .1852
    .345                                                                           .0188
    .390                .1568
    .400                                    .1963     .2387               .2222
    .402                          .1748
    .503                                                                           .0244
    .550                                    .1768     .1942
    .565                         -.4187
    .600                                                                .1009
    .637                .1670
    .650                                                      .1227
    .670                                                                           .1912
    .700                                              .0739
    .725                                    .0719
    .750                                                      .4509     .4324
    .760                          .0295
    .775                                    .4529     .3982
    .798                .0618
    .808                          .3911
    .834      .0260
    .839                .3105
    .850                                    .2818     .2039     .2603
    .857                          .2637
    .862                                                                          -.0069
    .865      .3151
    .879                .1931
    .910      .1490                         .1427               .1059
    .905                          .1328
    .919                .1020
```

```
                                    AMES 11-073(OA148) -140A/B/C/R ORB LEFT WING BOT                (XE8L28)

ALPHA ( 4) =    7.949    BETA  ( 3) =    4.238

 SECTION ( 1)LEFT WING BOT SURF             DEPENDENT VARIABLE CP

2Y/BW        .2990   .3640   .4270   .5340   .6730   .7800   .8870   .9720

  X/CW
    .950                             .0587   .1146   .1135
    .953                     .0538
    .955             .0374
    .965     .0345
   1.000                   -.1481          -.1790          -.4457

ALPHA ( 5) =   11.853    BETA  ( 1) =   -3.856   MACH   =  1.3913     Q      =  599.66     P      =  442.53     RN/L   =  2.9180

 SECTION ( 1)LEFT WING BOT SURF             DEPENDENT VARIABLE CP

2Y/BW        .2990   .3640   .4270   .5340   .6730   .7800   .8870   .9720

  X/CW
    .010   -.1062  -.2819   .3691   .6797   .6556   .7259   .7255
    .020    .0000  -.0370   .4784   .5715   .6005   .6264   .6456   .0746
    .040            .0215   .4538
    .050    .0993                   .4690   .4857   .5159   .5554
    .059                                                            .1503
    .060                            .4048
    .061                    .3762
    .086            .1810
    .094    .1233
    .150                            .3476   .4154   .4424   .4420
    .157                                                           -.0041
    .163            .3639
    .177                    .3160
    .229    .1531
    .246            .2714
    .250                            .3399   .3728   .3967   .3763
    .274                    .3146
    .345                                                            .1531
    .390            .2926
    .400                            .3182   .3799           .3512
    .402                    .2997
    .513                                                            .1599
    .560                            .2836   .3056
    .565                   -.4574
    .600                                                    .1895
    .637            .2530
    .650                                            .2131
    [illegible]                                                     .3219
    [illegible]                                     .1595
    .735                            .1539
    .750                                            .6222   .5704
    .760                    .1064
```

```
DATE 10 FEB 76              TABULATED PRESSURE DATA - OA148 ( AMES 11-073-1 )                                        PAGE 1898

                                   AMES 11-073(OA148) -140A/B/C/R ORB LEFT WING BOT                   (XEBL20)

ALPHA ( 5) =   11.863    BETA  ( 1) =   -3.856

 SECTION ( 1)LEFT WING BOT SURF                  DEPENDENT VARIABLE CP

2Y/BW        .2990   .3640   .4270   .5340   .6730   .7800   .8870   .9720

  X/CW
   .775                              .6069   .5372
   .798                .1094
   .808                        .5605
   .834        .1004
   .839                .4843
   .850                              .3836   .2993   .3395
   .857                        .3906
   .862                                                              .1014
   .865        .4854
   .870                .3079
   .900        .2520                 .2484                   .2330
   .905                        .2145
   .919                .1923
   .950                              .1442   .1898   .1774
   .952                        .1258
   .965                .0797
   .985        .0610
  1.000                       -.1336          -.3282          -.5277
ALPHA ( 5) =   11.873    BETA  ( 2) =    .179   MACH   =  1.3913     Q     =  599.63     P      =  442.53     RN/L    =  2.3[illegible]E0
 SECTION ( 1)LEFT WING BOT SURF                  DEPENDENT VARIABLE CP

2Y/BW        .2990   .3640   .4270   .5340   .6730   .7800   .8870   .9720

 X/CW
   .010      -.2440  -.3801   .1918   .6210   .6114   .6619   .6629
   .020       .0000  -.1402   .3272   .5417   .5761   .5960   .6078  -.0756
   .040              -.0793   .3735
   .050       .0230                   .4532   .4762   .4988   .5350
   .069                                                              .0433
   .080                               .3851
   .081                       .3169
   .086               .1059
   .094       .0765
   .150                               .3413   .4018   .4260   .4348
   .157                                                             -.0418
   .163               .2970
   .177                       .2942
   .229       .1171
   .246               .2375
 [illegible]                          .3233   .3581   .3805   .3670
 [illegible]                  .3041
   .315                                                              .0924
   .330               .2734
```

```
                              AMES 11-073(OA148) -140A/B/C/R ORB LEFT WING BOT              (XEB.28)

ALPHA ( 5) =   11.873   BETA  ( 2) =    .179

 SECTION ( 1)LEFT WING BOT SURF             DEPENDENT VARIABLE CP

2Y/BW       .2990   .3640   .4270   .5340   .6730   .7800   .8870   .9720

  X/CW
    .400                            .3138   .3687           .3299
    .402                    .2907
    .503                                                            .0989
    .550                            .2826   .2995
    .565                   -.4811
    .600                                                    .1678
    .637            .2564
    .650                                            .2047
    .670                                                            .2878
    .700                                    .1519
    .725                            .1530
    .750                                            .5925   .5542
    .760                    .1092
    .775                            .6357   .5314
    .798            .1471
    .806                    .5533
    .834    .1148
    .839            .4531
    .850                            .3811   .3030   .3483
    .857                    .3773
    .862                                                            .0710
    .865    .4602
    .870            .3010
    .900    .2586                   .2401                   .1931
    .905                    .2125
    .919            .1893
    .950                            .1381   .1990   .1863
    .953                    .1281
    .955            .0959
    .965    .0938
   1.000                   -.1396          -.3044          -.5280
ALPHA ( 5) =   11.870   BETA  ( 3) =   4.256  MACH  =  1.3913    Q    =  599.66    P    =  442.53    RN/L  =  2.9180

 SECTION ( 1)LEFT WING BOT SURF             DEPENDENT VARIABLE CP

2Y/BW       .2990   .3640   .4270   .5340   .6730   .7800   .8870   .9720

  X/CW
    .010   -.3509  -.4391   .0005   .5281   .5425   .5754   .5777
    .020    .0000  -.2346   .1757   .4954   .5234   .5508   .5574  -.2004
    .040           -.1716   .2860
    .050   -.0467                   .4192   .4439   .4651   .5004
    .069                                                           -.0523
    .080                            .3617
```

AMES 11-073(OA148) -140A/B/C/R ORB LEFT WING BOT (XEBL28)

ALPHA (5) = 11.870 BETA (3) = 4.256

SECTION (1) LEFT WING BOT SURF DEPENDENT VARIABLE CP

2Y/BW	.2000	.3640	.4270	.5340	.6730	.7800	.8870	.9720
X/CW								
.081			.2565					
.086		.0272						
.094	.0162							
.150				.3198	.3737	.4122	.4226	
.157								-.0734
.163		.2293						
.177			.2532					
.229	.0774							
.246		.1970						
.250				.3012	.3417	.3788	.3540	
.274			.2795					
.345								.0546
.390		.2425						
.400				.3040	.3581		.3152	
.402			.2747					
.503								.0517
.550				.2710	2930			
.565			-.4529					
.600							.1664	
.637		.2546						
.650						.1934		
.670								.2760
.700					.1484			
.725				.1492				
.750						.5926	.5406	
.760			.1197					
.775				.6121	.5360			
.798		.1703						
.808			.5016					
.834	.1100							
.839		.4134						
.850				.3751	.2930	.3519		
.857			.3524					
.862								.0590
.865	.4252							
.879		.2921						
.900	.2562			.2268			.1811	
.905			.2154					
.913		.1906						
.950				.1286	.1839	.1941		
.953			.1299					
.955		.1106						
.965	.1128							
1.000			-.2139		-.1932		-.4729	

REPRODUCIBILITY OF THE
ORIGINAL PAGE IS POOR

```
DATE 10 FEB 76              TABULATED PRESSURE DATA - OA148 ( AMES 11-073-1 )                                     PAGE 1901

                                    AMES 11-073(OA148) -140A/B/C/R ORB LEFT WING BOT              (XE8L28)

ALPHA ( 6) =    15.854    BETA  ( 1) =   -3.831   MACH   =  1.3903     Q      =  599.44     P      =  443.00     RN/L   =  2.9206

 SECTION ( 1)LEFT WING BOT SURF             DEPENDENT VARIABLE CP

2Y/BW        .2990     .3640     .4270     .5340     .6730     .7800     .8870     .9720

  X/CW
    .010    -.2038    -.3168     .2907     .7574     .7699     .8001     .7905
    .020     .0000    -.0457     .4520     .6987     .7384     .7647     .7722    -.0242
    .040               .0228     .5161
    .050     .1167                         .6064     .6470     .6786     .7081
    .069                                                                           .1285
    .080                                   .5425
    .081                         .4648
    .085               .2233
    .094     .1756
    .150                                   .4913     .5542     .6017     .5808
    .157                                                                           .0009
    .163               .4442
    .177                         .4331
    .223     .2247
    .246               .3580
    .250                                   .4606     .5192     .5603     .5044
    .274                         .4360
    .345                                                                           .2088
    .390               .4113
    .400                                   .4566     .5099               .4573
    .402                         .4171
    .503                                                                           .2014
    .550                                   .4115     .4196
    .565                        -.4782
    .600                                                                 .2596
    .637               .3726
    .650                                                       .2861
    .670                                                                           .3802
    .700                                             .2445
    .725                                   .2511
    .750                                                       .7543     .6499
    .760                         .2288
    .775                                   .8262     .6888
    .793               .2785
    .808                         .6817
    .834     .2384
    .839               .5774
    .850                                   .4659     .3687     .4207
    .857                         .4610
    .862                                                                           .1478
    .865     .6085
    .873               .3854
    .900     .3412                         .3022                         .2968
    .905                         .2779
    .919               .2508
```

```
                                     AMES 11-073(OA148) -140A/B/C/R ORB LEFT WING BOT                    (XEBL28)

ALPHA ( 6) =    15.854    BETA   ( 1) =    -3.831

 SECTION ( 1)LEFT WING BOT SURF                DEPENDENT VARIABLE CP

2Y/BW         .2990   .3640   .4270   .5340   .6730   .7800   .8870   .9720

  X/CW
    .950                              .2003   .2599   .2435
    .953                      .1886
    .955              .1396
    .965      .1331
   1.000                     -.1781          -.3342          -.5657

ALPHA ( 6) =    15.868    BETA   ( 2) =      .178   MACH   =  1.3903     Q      =  599.44     P      =  443.00     RN/L    =  2.9206

 SECTION ( 1)LEFT WING BOT SURF                DEPENDENT VARIABLE CP

2Y/BW         .2990   .3640   .4270   .5340   .6730   .7800   .8870   .9720

  X/CW
    .010     -.3046  -.3942   .0954   .6580   .6866   .6913   .6757
    .020      .0000  -.1523   .2938   .6320   .6806   .6970   .6915  -.1541
    .040             -.0810   .4242
    .050      .0445                   .5676   .6151   .6322   .6567
    .069                                                              .0192
    .080                              .5137
    .081                      .3886
    .086              .1389
    .094      .1070
    .150                              .4661   .5318   .5757   .5395
    .157                                                             -.0456
    .163              .3725
    .177                      .3952
    .223      .1776
    .245              .3233
    .250                              .4416   .4930   .5355   .4790
    .274                      .4186
    .345                                                              .1501
    .390              .3831
    .400                              .4385   .4942           .4288
    .402                      .4075
    .503                                                              .1770
    .550                              .4046   .4095
    .565                     -.4774
    .600                                                      .2552
    .637              .3883
    .650                                              .2775
    .670                                                              .3605
    .700                                      .2500
    .725                              .2683
    .750                                              .7338   .6280
    .760                      .2525
```

```
                              AMES 11-073(OA148) -140A/B/C/R ORB LEFT WING BOT          (XEBL28)

ALPHA ( 6) =   15.868    BETA  ( 2) =      .178

 SECTION ( 1)LEFT WING BOT SURF            DEPENDENT VARIABLE CP

2Y/BW         .2990     .3640     .4270     .5340     .6730     .7800     .8870     .9720

  X/CW
    .775                                    .7942     .6685
    .798                .3328
    .808                          .6494
    .834      .2426
    .839                .5426
    .850                                    .4545     .3641     .4196
    .857                          .4481
    .862                                                                            .1250
    .865      .5700
    .879                .3835
    .900      .3472                         .2928                         .2629
    .905                          .2804
    .919                .2586
    .950                                    .1931     .2437     .2538
    .953                          .1911
    .955                .1633
    .965      .1622
   1.000                         -.2836              -.3347              -.5595
ALPHA ( 6) =   15.859    BETA  ( 3) =    4.283   MACH  =  1.3903    Q     =  599.44    P     =  443.00    RN/L  =  2.9206

 SECTION ( 1)LEFT WING BOT SURF            DEPENDENT VARIABLE CP

2Y/BW         .2990     .3640     .4270     .5340     .6730     .7800     .8870     .9720

  X/CW
    .010     -.3792    -.4713    -.0859     .5282     .5796     .5643     .5519
    .020      .0000    -.2433     .1400     .5459     .5941     .6161     .6024    -.2486
    .040               -.1745     .3178
    .050     -.0267                         .5021     .5576     .5775     .5960
    .069                                                                           -.0608
    .080                                    .4647
    .081                          .3173
    .086                .0618
    .094      .0515
    .150                                    .4299     .4999     .5448     .5138
    .157                                                                           -.0773
    .163                .2937
    .177                          .3377
    .229      .1262
    .246                .2667
    .250                                    .4073     .4696     .5141     .4605
    .274                          .3850
    .345                                                                            .1005
    .390                .3473
```

AMES 11-073(OA148) -140A/B/C/R ORB LEFT WING BOT (XEBL28)

ALPHA (6) = 15.859 BETA (3) = 4.283

SECTION (1)LEFT WING BOT SURF DEPENDENT VARIABLE CP

2Y/BW	.2990	.3640	.4270	.5340	.6730	.7800	.8870	.9720
X/CW								
.400				.4168	.4749		.4045	
.402			.3821					
.503								.1806
.550				.3931	.3936			
.565			-.4723					
.600							.2665	
.637		.3556						
.650						.2684		
.670								.3214
.700					.2667			
.725				.2767				
.750						.7081	.6063	
.760			.3060					
.775				.7455	.6259			
.798		.3365						
.808			.5961					
.834	.2320							
.839		.5108						
.850				.4381	.3465	.4042		
.957			.4244					
.862								.1056
.865	.5397							
.879		.3742						
.900	.3500			.2850			.2315	
.905			.2769					
.919		.2551						
.950				.1882	.2333	.2516		
.953			.1937					
.955		.1755						
.965	.1816							
1.000			-.2916		-.3619		-.4985	

TABULATED PRESSURE DATA - OA148 (AMES 11-073-1)

AMES 11-073(OA148) -140A/B/C/R ORB LEFT WING BOT (XEBL29) (05 AUG 75)

REFERENCE DATA

SREF = 2690.0000 SQ.FT. XMRP = 1076.6800 IN. XO
LREF = 474.8000 IN. YMRP = .0000 IN. YO
BREF = 936.0680 IN. ZMRP = 375.0000 IN. ZO
SCALE = .0300

PARAMETRIC DATA

RUDDER = -10.000 SPDBRK = 35.000
BDFLAP = 16.300 L-ELVN = 10.000
R-ELVN = .000 MACH = 1.250

ALPHA (1) = -3.986 BETA (1) = -3.845 MACH = 1.2451 Q = 599.58 P = 552.51 RN/L = 3.0225

SECTION (1)LEFT WING BOT SURF DEPENDENT VARIABLE CP

2Y/BW	.2990	.3640	.4270	.5340	.6730	.7800	.8870	.9720
X/CW								
.010	-.1488	-.2845	-.1990	-.4039	-.5048	-.3520	-.3230	
.020	.0000	-.2701	-.3056	-.5529	-.5490	-.5623	-.5606	-.6000
.040		-.2625	-.3437					
.050	-.1472			-.5737	-.5746	-.5947	-.5909	
.063								-.6520
.080				-.5351				
.081			-.2406					
.086		-.1430						
.094	-.1481							
.150				-.4952	-.5120	-.5264	-.5399	
.157								-.3866
.163		-.0529						
.177			-.2139					
.229	-.1310							
.246		-.1404						
.250				-.2353	-.4594	-.4767	-.4968	
.274			-.1936					
.345								-.5916
.390		-.1642						
.400				-.2005	-.2652		-.4412	
.402			-.1650					
.503								-.5608
.550				-.1421	-.1745			
.565			-.3694					
.600							-.4176	
.637		-.1087						
.650						-.2299		
.670								-.4520
.700					-.2190			
.725				-.1991				
.750						.1300	-.1580	
.760			-.2037					
.775				.0759	.0233			
.790		-.1790						
[illegible]			.1035					
.854	-.2050							
[illegible]		.0775						
[illegible]				-.0138	-.0463	.0026		

```
DATE 10 FEB 76              TABULATED PRESSURE DATA - OA148 ( AMES 11-073-1 )                                       PAGE 1906

                                       AMES 11-073(OA148) -140A/B/C/R ORB LEFT WI.. 6..                   (XEBL29)

ALPHA ( 1) =    -3.986     BETA   ( 1) =    -3.845

 SECTION ( 1)LEFT WING BOT SURF               DEPENDENT VARIABLE CP

2Y/BW         .2990   .3640   .4270   .5340   .6730   .7800   .8870   .9720

   X/CW
     .857                     .0203
     .862                                                             -.4367
     .865     .0862
     .879            -.0250
     .900    -.0774                  -.0881                  -.1597
     .905                    -.1076
     .919            -.1329
     .950                            -.1501  -.1149  -.1568
     .953                    -.1830
     .955            -.2000
     .965    -.2020
    1.000                    -.2165          -.1712          -.1806
ALPHA ( 1) =    -3.967     BETA   ( 2) =      .186   MACH   =  1.2451     Q      =  599.58     P      =  552.51     RN/L   =  3.0225

 SECTION ( 1)LEFT . NG BOT SURF               DEPENDENT VARIABLE CP

2Y/BW         .2990   .3640   .4270   .5340   .6730   .7800   .8870   .9720

   X/CW
     .010    -.0980  -.1310  -.0874  -.4012  -.5297  -.3960  -.3773
     .020     .0000  -.1418  -.1426  -.5477  -.5683  -.5909  -.5927  -.6572
     .040            -.1338  -.1988
     .050    -.1127                  -.5229  -.5896  -.6218  -.6234
     .069                                                            -.6837
     .080                            -.4937
     .081                    -.1855
     .086            -.0685
     .094    -.1126
     .150                            -.2837  -.5084  -.5427  -.5693
     .157                                                            -.4015
     .163             .0052
     .177                    -.1662
     .229    -.0988
     .245            -.0963
     .250                            -.1877  -.3936  -.4919  -.5263
     .274                    -.1391
     .345                                                            -.6253
     .390            -.1029
     .400                            -.1421  -.1656          -.4641
     .402                    -.1152
     .503                                                            -.6159
     .550                            -.1176  -.1363
     .565                    -.4164
     .600                                                    -.3318
```

REPRODUCIBILITY OF THE
ORIGINAL PAGE IS POOR

```
                                  AMES 11-073(OA148) -140A/B/C/R ORB LEFT WING BOT                (XERL29)
ALPHA ( 1) =   -3.957    BETA  ( 2) =      .186

 SECTION ( 1)LEFT WING BOT SURF              DEPENDENT VARIABLE CP

2Y/BW        .2990   .3540   .4270   .5340   .6730   .7800   .8870   .9720

  X/CW
   .637              -.0832
   .650                                              -.1808
   .670                                                              -.4546
   .700                                      -.1963
   .725                              -.1875
   .750                                              .1581   .1268
   .760                      -.2037
   .775                               .0946   .0379
   .799              -.1711
   .808                       .1059
   .834      -.1955
   .839               .0703
   .850                              -.0049  -.0578   .0221
   .857                       .0200
   .862
   .865       .0606                                                  -.3498
   .879              -.0396
   .900      -.0940                  -.1032                  -.0583
   .905                      -.1053
   .919              -.1386
   .950                              -.1641  -.1103  -.1314
   .953                      -.1983
   .955              -.1983
   .965      -.2018
  1.000                      -.2561          -.2357          -.1380
ALPHA ( 1) =   -3.974    BETA  ( 3) =    4.269    MACH   =  1.2451     Q      =  599.58    P      =  552.51    RN/L   =  3.0225

 SECTION ( 1)LEFT WING BOT SURF              DEPENDENT VARIABLE CP

2Y/BW        .2990   .3540   .4270   .5340   .6730   .7800   .8870   .9720

  X/CW
   .010      -.0321  -.0448   .0198  -.3925  -.5404  -.4298  -.4160
   .020       .0000  -.0597   .0073  -.5316  -.5760  -.6097  -.6150  -.6879
   .040              -.0512  -.0931
   .050      -.1032                  -.4492  -.5883  -.6346  -.6403
   .059
   .080                                                              -.6614
   .081                              -.3758
   .090                      -.1120
   .100              -.0106
   .104      -.0354
   .150                              -.2090  -.4655  -.5445  -.5727
   .157                                                              -.3941
   .163               .0605
```

AMES 11-073(OA148) -140A/B/C/R ORB LEFT WING BOT (XEBL29)

ALPHA (1) = -3.974 BETA (3) = 4.269

SECTION (1)LEFT WING BOT SURF DEPENDENT VARIABLE CP

2Y/BW	.2990	.3540	.4270	.5340	.6730	.7800	.8870	.9720
X/CW								
.177			-.1112					
.229	-.0623							
.246		-.0455						
.250				-.1418	-.1864	-.4150	-.5351	
.274			-.0888					
.345								-.6006
.300		-.0576						
.400				-.1035	-.1284		-.3698	
.462			-.0831					
.503								-.5496
.550				-.0956	-.1104			
.565			-.3562					
.600							-.1591	
.637		-.0769						
.650						-.1652		
.670								-.0284
.700					-.1809			
.725				-.1831				
.750						.1533	.1758	
.760			-.1925					
.775				.0997	.0587			
.798		-.1334						
.808			.1074					
.834	-.2007							
.839		.2352						
.850				.0093	-.0638	.0186		
.857			.0009					
.862								-.1057
.865	.0961							
.879		-.0547						
.900	-.0959			-.1075			-.0593	
.905			-.1138					
.919		-.1446						
.950				-.1817	-.1080	-.1121		
.953			-.1993					
.955		-.1909						
.965	-.1995							
1.000			-.2659		-.2748		-.1364	

AMES 11-073(OA148) -140A/B/C/R ORB LEFT WING BOT (XEBL29)

ALPHA (2) = -.035 BETA (1) = -3.871 MACH = 1.2459 Q = 599.80 P = 552.04 RN/L = 3.0192

SECTION (1)LEFT WIN BOT SURF DEPENDENT VARIABLE CP

2Y/BW X/CW	.2990	.3340	.4270	.5340	.6730	.7800	.8870	.9720
.010	.0014	.0107	.2002	-.1850	-.2978	-.2215	-.1352	
.020	.0000	-.0225	.1670	-.3317	-.3576	-.3682	-.3945	-.3358
.040		-.0218	-.0129					
.050	-.0360			-.2513	-.3437	-.3876	-.4072	
.069								-.3654
.080				-.2189				
.081			-.0564					
.086		.0195						
.094	-.0608							
.150				-.1427	-.2365	-.2832	-.3280	
.157								-.2356
.163		.0846						
.177			-.0696					
.229	-.0604							
.246		-.0357						
.250				-.0891	-.1009	-.2042	-.2741	
.274			-.0625					
.345								-.2014
.390		-.0461						
.400				-.0686	-.0754		-.1469	
.402			-.0554					
.503								-.1883
.550				-.0403	-.0508			
.565			-.4289					
.600							-.1211	
.637		-.0244						
.650						-.1133		
.670								.0340
.700					-.1302			
.725				-.1200				
.750						.2618	.2311	
.760			-.1409					
.775				.2130	.1555			
.794		-.1320						
.809			.2231					
.844	-.1520							
.853		.1914						
[illegible]				.0938	.0458	.0723		
.857			.1155					
.862								-.1309
.865	.2101							
.879		.0581						
.900	-.0028			.0013			-.0171	
[illegible]			-.0304					
.919		-.0647						

```
                                         AMES 11-073(OA148) -140A/B/C/R ORB LEFT WING BOT              (XEBL29)

ALPHA ( 2) =     -.035    BETA  ( 1) =   -3.871

 SECTION ( 1)LEFT WING BOT SURF                 DEPENDENT VARIABLE CP

2Y/BW        .2990   .3640   .4270   .5340   .6730   .7800   .8870   .9720

  X/CW
   .950                              -.0781  -.0375  -.0962
   .953                      -.1067
   .955              -.1409
   .955      -.1444
  1.000                      -.1326          -.0955          -.3460
ALPHA ( 2) =     -.027    BETA  ( 2) =     .192   MACH   =  1.2459     Q      =  599.50     T      =  552.04     RN/L   =  3.0192
 SECTION ( 1)LEFT WING BOT SURF                 DEPENDENT VARIABLE CP

2Y/BW        .2990   .3640   .4270   .5340   .6730   .7800   .8870   .9720

  X/CW
   .010      -.0399   .0032   .2549  -.1702  -.3164  -.2574  -.1874
   .020       .0000  -.0083   .2145  -.2103  -.3148  -.3855  -.4250  -.3426
   .040               .0043   .0107
   .050      -.0515                  -.1794  -.2987  -.3753  -.4234
   .069                                                              -.3324
   .080                              -.1544
   .081                      -.0024
   .086               .0441
   .094      -.0675
   .150                              -.1092  -.1608  -.2519  -.3298
   .157                                                              -.2291
   .163               .1104
   .177                      -.0378
   .229      -.0444
   .246              -.0043
   .250                              -.0524  -.0836  -.0891  -.1454
   .274                      -.0234
   .345                                                              -.1047
   .390              -.0081
   .400                              -.0248  -.0316          -.0503
   .402                      -.0175
   .503                                                              -.1450
   .550                              -.0172  -.0297
   .565                      -.4762
   .600                                                      -.0986
   .637              -.0053
   .650                                              -.0938
   .670                                                               .0585
   .700                                      -.1173
   .745                              -.1120
   .750                                               .2662   .2432
   .760                      -.1393
```

```
                              AMES 11-073(OA148) -140A/B/C/R ORB LEFT WING BOT          (XEBL29)

ALPHA ( 2) =    -.027    BETA  ( 2) =     .182

 SECTION ( 1)LEFT WING BOT SURF              DEPENDENT VARIABLE CP

2Y/BW        .2990   .3640   .4270   .5340   .6730   .7800   .8870   .9720

  X/CW
   .775                              .2199   .1631
   .798              -.1236
   .808                      .2294
   .834      -.1435
   .843              .1795
   .850                              .0944   .0396   .0719
   .857                      .1130                                   -.1331
   .862
   .865      .1710
   .873              .0412
   .900      -.0128                  -.0108                  -.0172
   .905                      -.0400
   .919              -.0713
   .950                              -.0942  -.0292  -.0744
   .953                      -.1275
   .955              -.1454
   .965      -.1584
  1.000                      -.1523          -.1228          -.3147
ALPHA ( 2) =    -.032    BETA  ( 3) =    4.246   MACH   =  1.2459    Q     =  599.80    P     =  552.04    RN/L   =  3.0192

 SECTION ( 1)LEFT WING BOT SURF              DEPENDENT VARIABLE CP

2Y/BW        .2990   .3640   .4270   .5340   .6730   .7800   .8870   .9720

  X/CW
   .010      -.1213  -.0561  .2901   -.0597  -.2696  -.2718  -.2043
   .020      .0000   -.0342  .2570   -.0621  -.1891  -.3569  -.4270  -.2008
   .040              -.0182  .1117
   .050      -.0847                  -.1118  -.2328  -.2799  -.3551
   .073                                                              -.1918
   .080                              -.0793
   .091                      .0482
   [illegible]               .0494
   [illegible]  -.0894
   [illegible]                       -.0642  -.0942  -.1023  -.1334
   [illegible]                                                       -.1490
   [illegible]       .1256
   [illegible]               .0009
   [illegible]  -.0331
   [illegible]       .0312
   [illegible]                       -.0171  -.0467  -.0631  -.0956
   [illegible]               .0097
   [illegible]                                                       -.1091
   [illegible]       .0227
```

```
DATE [illegible]                 TABULATED PRESSURE DATA - OA148 ( AMES 11-073-1 )

                                      AMES 11-073(OA148) -140A/B/C/P ORB LEFT WING BOT               (RSEL89)

ALPHA ( 2) =    -.032    BETA  ( 3) =    4.246

 SECTION  ( 1)LEFT WING BOT SURF              DEPENDENT VARIABLE CP

2Y/BW        .2990   .3640   .4270   .5340   .6730   .7800   .8870   .9720

   X/CW
  [illegible]                        -.0018  .0[illegible]          -.0577
  [illegible]                .0073
  [illegible]                                                                -.1242
  [illegible]                        -.0133  -.0119
  [illegible]               -.1075
  [illegible]                                                -.0939
  [illegible]       -.0009
  [illegible]                                        -.0939
  [illegible]                                                                 .0577
  [illegible]                                -.1079
  [illegible]                        -.1093
  [illegible]                                         .2646   .2305
  [illegible]               -.1337
  [illegible]                         .2359   .1690
  [illegible]       -.0315
  [illegible]                .2377
  [illegible] -.1201
   .833              .1490
   .850                               .0993   .0392   .0725
   .857                      .0997
  [illegible]                                                                -.1565
   .865       .1530
   .873              .0350
   .900      -.0174                  -.0280                  -.0881
  [illegible]               -.[illegible]
  [illegible]      -.0745
   .950                              -.[illegible] -.1281  -.0697
   .953                     -.1375
   .955             -.[illegible]
   .965      -.1495
  1.000                     -.1578          -.[illegible]          -.2628
ALPHA ( 2) =     3.922    BETA [illegible]        [illegible]       [illegible]     0

 SECTION  ( 1)LEFT WING BOT SURF              DEPENDENT VARIABLE CP

2Y/BW        .2990   .3640   .4270   .5340   .6730   .7800   .8870   .9720

   X/CW
  [illegible]  .0353  -.0[illegible] [illegible] [illegible] [illegible] [illegible] .1557
  [illegible]  [illegible] [illegible]     [illegible]  .[illegible]04  [illegible] -.09[illegible]  [illegible]
  [illegible]          [illegible]
  [illegible]  [illegible]                  [illegible] -.[illegible]  .02[illegible]  [illegible]
  [illegible]                                                                 .0319
  [illegible]                         [illegible]
```

```
DATE 10 FEB 76            TABULA'         . DATA - OA148 ( AMES 11-073-1 )                           PAGE 1913

                                   AMES 11-073(OA148) -140A/B/C/R ORB LEFT WING BOT             (XEBL29)

ALPHA ( 3) =    3.922   BETA  ( 1) =   -3.869

 SECTION ( 1)LEFT WING BOT SURF              DEPENDENT VARIABLE CP

2Y/BW       .2990    .3640    .4270    .5340    .6730    .7800    .8870    .9720

  X/CW
   .081                      .1330
   .086              .0964
   .094     .0119
   .150                               .0339    .0515    .0709    .0771
   .157                                                                   -.0857
   .163              .2031
   .177                      .0780
   .229    -.0016
   .246              .0761
   .250                               .0654    .0593    .0759    .0390
   .274                      .0732
   .345                                                                   -.0065
   .390              .0711
   .400                               .0744    .0922             .0475
   .402                      .0614
   .503                                                                   -.0339
   .550                               .0669    .0792
   .565                     -.4820
   .600                                                          -.0161
   .637              .0699
   .650                                                 -.0062
   .670                                                                    .1522
   .700                                        -.0464
   .725                              -.0382
   .750                                                  .4247    .3803
   .760                     -.0662
   .775                               .4032    .3311
   .798             -.0540
   .808                      .3743
   .834    -.0696
   .839              .3102
   .850                               .2041    .1206    .1352
   .857                      .2145
   .862                                                                   -.0666
   .865     .3349
   .879              .1389
   .900     .0789                     .0721                      .0496
   .905                      .0409
   .919              .0050
   .940                              -.0301    .0217   -.0327
   .953                     -.0506
   .955             -.0861
   .965    -.1072
  1.000                     -.0808             -.1479            -.4615
```

AMES 11-073(OA148) -140A/B/C/R ORB LEFT WING BOT (XEBL29)

ALPHA (3) = 3.922 BETA (2) = .180 MACH = 1.2454 Q = 599.82 P = 552.51 RN/L = 3.0214

SECTION (1)LEFT WING BOT SURF DEPENDENT VARIABLE CP

2Y/BW	.2990	.3640	.4270	.5340	.6730	.7800	.8870	.9720
X/CW								
.010	-.0871	-.2265	.3669	.2842	.1587	.1545	.1836	
.020	.0000	-.1077	.3678	.1759	.1359	.0891	.0427	.0210
.040		-.0725	.2471					
.050	-.0228			.1061	.0363	.0669	.0557	
.069								.0007
.080				.0901				
.081			.1517					
.086		.0645						
.094	-.0243							
.150				.0608	.0901	.0917	.0780	
.157								-.0963
.163		.1986						
.177			.0907					
.229	-.0231							
.246		.0886						
.250				.0886	.0799	.0799	.0413	
.274			.0983					
.345								-.0268
.390		.0919						
.400				.0952	.1128		.0695	
.402			.0874					
.503								-.0381
.550				.0849	.0908			
.565			-.5155					
.600							-.0194	
.637		.0862						
.650						-.0004		
.670								.1359
.700					-.0443			
.725				-.0282				
.750						.4286	.3784	
.760			-.0676					
.775				.4037	.3350			
.798		-.0400						
.808			.3669					
.834	-.0576							
.839		.2807						
.853				.1994	.1201	.1532		
.857			.2001					
.862								-.0921
.865	.2761							
.879		.1245						
.900	.0749			.0607			.0402	
.905			.0295					
.919		.0012						

```
                              AMES 11-073(OA148) -140A/B/C/R ORB LEFT WING BOT             (XE3L29)

ALPHA ( 3) =    3.922    BETA  ( 2) =     .180

 SECTION ( 1)LEFT WING BOT SURF            DEPENDENT VARIABLE CP

2Y/BW        .2990   .3640   .4270   .5340   .6730   .7800   .8870   .9720

  X/CW
    .950                            -.0393   .0302  -.0146
    .953                    -.0600
    .955            -.0878
    .965    -.1006
   1.000                    -.1042           -.1558          -.4275

ALPHA ( 3) =    3.925    BETA  ( 3) =    4.237   MACH   =  1.2454     Q      =  599.82     P      =  552.51     RN/L   =  3.0214

 SECTION ( 1)LEFT WING BOT SURF            DEPENDENT VARIABLE CP

2Y/BW        .2990   .3640   .4270   .5340   .6730   .7800   .8870   .9720

  X/CW
    .010    -.2463  -.3615   .2746   .3392   .2045   .2270   .2426
    .020     .0000  -.2120   .3145   .2351   .1738   .1626   .1206  -.0414
    .040            -.1641   .2609
    .050    -.0963                    1650   .0865   .1072   .1194
    .063                                                             -.0317
    .080                             .1312
    .081                     .1711
    .086             .0107
    .094    -.0756
    .150                             .0994   .1164   .1136   .1070
    .157                                                             -.1093
    .163             .1769
    .177                     .1113
    .229    -.0605
    .246             .0997
    .250                             .1073   .0987   .1067   .0738
    .274                     .1181
    .345                                                             -.0685
    .390             .1089
    .400                             .1210   .1427           .0899
    .402                     .1103
    .503                                                             -.0718
    .550                             .0918   .0994
    .565                    -.4675
    .600                                                     -.0251
    .637             .0924
    .650                                             .0009
    .670                                                              .1051
    .700                                    -.0455
    .725                            -.0292
    .7[illegible]                                             .4083   .3595
    .7[illegible]                    -.0558
```

AMES 11-073(OA148) -140A/B/C/R ORB LEFT WING BOT (XEBL29)

ALPHA (3) = 3.925 BETA (3) = 4.237

SECTION (1)LEFT WING BOT SURF DEPENDENT VARIABLE CP

2Y/BW	.2990	.3640	.4270	.5340	.6730	.7800	.8870	.9720
X/CW								
.775				.4217	.3236			
.798		.0067						
.808			.3384					
.834	-.0423							
.839		.2457						
.850				.1858	.1169	.1590		
.857			.1810					
.862								-.1163
.865	.2464							
.879		.1132						
.900	.0723			.0423			-.0007	
.905			.0267					
.919		.0026						
.950				-.0585	.0137	-.0045		
.953			-.0626					
.955		-.0737						
.965	-.0822							
1.000			-.1591		-.1522		-.4016	

ALPHA (4) = 7.990 BETA (1) = -3.670 MACH = 1.2446 Q = 599.59 P = 552.98 RN/L = 3.0205

SECTION (1)LEFT WING BOT SURF DEPENDENT VARIABLE CP

2Y/BW	.2990	.3640	.4270	.5340	.6730	.7800	.8870	.9720
X/CW								
.010	-.0338	-.2413	.3991	.5413	.4877	.5718	.5766	
.020	.0000	-.0639	.4547	.4118	.4265	.4467	.4620	.0817
.040		-.0171	.3747					
.050	.0675			.3127	.3188	.3399	.3839	
.069								.1226
.080				.2534				
.081			.2742					
.086		.1291						
.094	.0637							
.150				.2173	.2757	.3011	.2923	
.157								-.0421
.163		.2917						
.177			.2068					
.229	.0570							
.246		.1745						
.250				.2224	.2326	.2753	.2343	
.274			.2035					
.345								.0530
.390		.1858						

```
                         AMES 11-073(OA148) -140A/B/C/R ORB LEFT WING BOT              (XE8L29)

ALPHA ( 4) =     7.990    BETA  ( 1) =   -3.870

 SECTION ( 1)LEFT WING BOT SURF                  DEPENDENT VARIABLE CP

2Y/BW        .2990   .3640   .4270   .5340   .6730   .7800   .8870   .9720

  X/CW
   .400                          [illegible]   .2913           .2237
   .402                      .1
   .503                                                                .0447
   .550                              .1991   .1867
   .565                    -.5089
   .600                                                      .0580
   .637              .1771
   .650                                              .0776
   .670                                                                .2183
   .700                                      .0313
   .725                              .0431
   .750                                              .5442   .4615
   .760                      .0114
   .775                              .5949   .4875
   .798              .0599
   .808                      .5008
   .834      .0381
   .839              .4073
   .850                              .2860   .1863   .2192
   .857                      .2870
   .862                                                               -.0164
   .865      .4348
   .879              .2093
   .900      .1554                   .1252                   .1129
   .905                      .0942
   .919              .0672
   .950                              .0192   .0710   .0372
   .953                      .0026
   .955             -.0368
   .965     -.0512
  1.000                     -.1261           -.2407          -.5602
ALPHA ( 4) =     7.994    BETA  ( 2) =     .176   MACH  =  1.2446    Q     =  599.59    P     =  552.98    RN/L  =  3.0205

 SECTION ( 1)LEFT WING BOT SURF                  DEPENDENT VARIABLE CP

2Y/BW        .2990   .3640   .4270   .5340   .6730   .7800   .8870   .9720

  X/CW
   .010     -.2199  -.4642   .2163   .5516   .5044   .5598   .5631
   .020      .0000  -.2032   .3352   .4424   .4510   .4547   .4706  -.0466
   .040             -.1420   .3288
   .060     -.0203                   .3501   .3437   .3584   .3934
   .070                                                               .0196
   .080                              .2900
```

```
                                   AMES 11-073(OA148) -140A/B/C/R ORB LEFT WING BOT          (XEBL29)

ALPHA ( 4) =    7.994    BETA  ( 2) =     .176

 SECTION ( 1)LEFT WING BOT SURF              DEPENDENT VARIABLE CP

2Y/BW      .2990   .3640   .4270   .5340   .6730   .7800   .8670   .9720

 X/CW
   .081                    .2583
   .085            .0376
   .094    .0059
   .150                            .2475   .2844   .3182   .3004
   .157                                                           -.0710
   .163            .2431
   .177                    .2144
   .223    .0279
   .246            .1564
   .250                            .2337   .2586   .2927   .2375
   .274                    .2207
   .345                                                            .0077
   .390            .2034
   .400                            .2432   .2951           .2188
   .402                    .2165
   .503                                                            .0085
   .550                            .2083   .2025
   .565                   -.5480
   .600                                                    .0485
   .637            .1954
   .650                                            .0873
   .670                                                            .1889
   .700                                    .0390
   .725                            .0565
   .750                                            .5397   .4525
   .760                    .0368
   .775                            .6024   .4846
   .798            .1055
   .808                    .4803
   .834    .0612
   .839            .3776
   .850                            .2805   .1872   .2304
   .857                    .2758
   .862                                                           -.0427
   .865    .3921
   .879            .2067
   .900    .1690                   .1169                   .0991
   .905                    .0997
   .919            .0740
   .950                            .0125   .0809   .0551
   .953                    .0054
   .955           -.0214
   .965   -.0263
  1.000                   -.1667          -.1662          -.5471
```

AMES 11-073(OA148) -140A/B/C/R ORB LEFT WING BOT (XEBL29)

ALPHA (4) = 7.996 BETA (3) = 4.240 MACH = 1.2446 Q = 599.59 P = 552.98 RN/L = 3.0205

SECTION (1)LEFT WING BOT SURF DEPENDENT VARIABLE CP

2Y/BW	.2990	.3640	.4270	.5340	.6730	.7800	.8870	.9720
X/CW								
.010	-.3988	-.5283	.0624	.5098	.4807	.5304	.5351	
.020	.0000	-.3075	.2002	.4344	.4382	.4545	.4684	-.2030
.040		-.2402	.2621					
.050	-.1068			.3509	.3466	.3640	.3996	
.059								-.0916
.080				.2930				
.081			.2101					
.085		-.0356						
.094	-.0588							
.150				.2512	.2937	.3247	.3034	
.157								-.1094
.163		.1857						
.177			.2092					
.229	-.0127							
.246		.1302						
.250				.2390	.2835	.3020	.2362	
.274			.2267					
.345								-.0407
.390		.2022						
.400				.2525	.2866		.2052	
.402			.2285					
.503								-.0415
.550				.2057	.1993			
.565			-.5013					
.600							.0342	
.637		.1923						
.650						.0763		
.670								.1619
.700					.0380			
.725				.0650				
.750						.5285	.4462	
.760			.0955					
.775				.5701	.4706			
.798		.1569						
.808			.4301					
.834	.0693							
.840		.3365						
.850				.2646	.1721	.2276		
.857			.2548					
.862								-.0709
.865	.3591							
.877		.1934						
.890	.1649			.1052			.0593	
.905			.0962					
.919		.0749						

```
                              AMES 11-073(OA148) -140A/B/C/R ORB LEFT WING BOT              (XEBL29)

ALPHA ( 4) =    7.936    BETA  ( 3) =    4.240

 SECTION ( 1)LEFT WING BOT SURF               DEPENDENT VARIABLE CP

2Y/BW        .2990     .3640     .4270     .5340     .6730     .7800     .8970     .9720

 X/CW
    .950                                   .0027     .0652     .0617
    .953                         .0047
    .955              -.0077
    .965    -.0080
   1.000                        -.1326              -.1406              -.5576

ALPHA ( 5) =   11.923    BETA  ( 1) =   -3.851   MACH    =  1.2447     Q      =  599.71     P      =  552.98     RN/L   =  3.0237

 SECTION ( 1)LEFT WING BOT SURF               DEPENDENT VARIABLE CP

2Y/BW        .2990     .3640     .4270     .5340     .6730     .7800     .8970     .9720

 X/CW
    .010    -.1800    -.4062     .2943     .6943     .6935     .7451     .7292
    .020     .0000    -.1102     .4469     .6039     .6474     .6757     .6756    -.0397
    .040              -.0412     .4669
    .050     .0739                         .5011     .5440     .5759     .5908
    .069                                                                           .0744
    .080                                   .4414
    .081                         .4061
    .086               .1565
    .094     .1060
    .150                                   .3959     .4655     .4934     .4510
    .157                                                                          -.0373
    .163               .3772
    .177                         .3499
    .229     .1317
    .246               .2853
    .250                                   .3838     .4269     .4393     .3781
    .274                         .3468
    .345                                                                           .1058
    .390               .3243
    .400                                   .3774     .4007               .3280
    .402                         .3719
    .503                                                                           .1068
    .550                                   .3026     .2989
    .565                        -.5251
    .600                                                                 .1276
    .637               .2881
    .650                                                       .1498
    .670                                                                           .2774
    .700                                             .1269
    .725                                   .1660
    .750                                                       .6530     .5248
    .760                         .2383
```

```
DATE 10 FEB 76              TABULATED PRESSURE DATA - OA148 ( AMES 11-073-1 )                                              PAGE 1921

                                         AMES 11-073(0;'.3) -140A/B/C/R ORB LEFT WING BOT               (XEBL29)

ALPHA ( 5) =    11.923    BETA  ( 1) =    -3.851

 SECTION ( 1)LEFT WING BOT SURF              DEPENDENT VARIABLE CP

2Y/BW        .2990   .3640   .4270   .5340   .6730   .7800   .8870   .9720

  X/CW
    .775                                .7319   .5900
    .798                .2885
    .808                        .5784
    .834        .1811
    .839                .4788
    .850                                .3424   .2391   .2907
    .857                        .3423
    .862                                                                .0269
    .865        .5340
    .879                .2692
    .900        .2305                   .1707                   .1697
    .905                        .1483
    .919                .1235
    .950                                .0668   .1205   .1001
    .953                        .0582
    .955                .0136
    .965        .0003
   1.000                       -.0384          -.3033          -.6351
ALPHA ( 5) =    11.934    BETA  ( 2) =      .177   MACH   =  1.2447     Q       =  599.71     P       =  552.98     RN/L    =  3.0237

 SECTION ( 1)LEFT WING BOT SURF              DEPENDENT VARIABLE CP

2Y/BW        .2990   .3640   .4270   .5340   .6730   .7800   .8870   .9720

  X/CW
    .010       -.3529  -.4959   .1030   .6220   .6449   .6615   .6423
    .020        .0000  -.2230   .2790   .5692   .6123   .6380   .6229  -.2025
    .040               -.1534   .3730
    .050       -.0132                   .4891   .5283   .5570   .5628
    .069                                                                -.0418
    .080                                .4332
    .081                        .3441
    .086                .0685
    .094        .0406
    .150                                .3941   .4645   .4823   .4357
    .157                                                                -.0732
    .163                .3043
    .177                        .3309
    .229        .0850
    .246                .2356
    .250                                .3812   .4184   .4322   .3629
    .274                        .3392
    .305                                                                .0434
    .330                .3204
```

```
                           AMES 11-073(OA148) -140A/B/C/R ORB LEFT WING BOT              (XE6_29)

ALPHA ( 5) =   11.934    BETA  ( 2) =     .177

 SECTION ( 1)LEFT WING BOT SURF             DEPENDENT VARIABLE CP

2Y/BW        .2990   .3640   .4270   .5340   .6730   .7800   .8870   .9720

  X/CW
   .400                             .3665   .3921           .3052
   .402                     .3666
   .503                                                             .1244
   .550                             .3001   .2908
   .565                    -.5770
   .600                                                     .1275
   .637             .2873
   .650                                             .1461
   .675                                                             .2353
   .700                                     .1797
   .725                             .1972
   .750                                             .6300   .5120
   .760                     .2374
   .775                             .7073   .5658
   .799             .2895
   .825                     .5439
   .844     .1708
   .848             .4477
   .850                             .3306   .2307   .2837
   .857                     .3307
   .862                                                            -.0074
   .865     .4861
   .879             .2697
   .900     .2371                   .1634                   .1471
   .905                     .1509
   .919             .1299
   .950                             .0610   .1029   .1078
   .953                     .0581
   .955             .0317
   .965     .0267
  1.000                    -.1490          -.2003          -.6043
ALPHA ( 5) =   11.927    BETA  ( 3) =    4.253   MACH    =  1.2447     Q      =  599.71     P      =  552.98     RN/L   =  3.0237

 SECTION ( 1)LEFT WING BOT SURF             DEPENDENT VARIABLE CP

2Y/BW        .2990   .3640   .4270   .5340   .6730   .7800   .8870   .9720

  X/CW
   .010    -.4673  -.3471  -.0922   .5252   .5631   .5640   .5405
   .020     .0000  -.3231   .1240   .5134   .5209   .5831   .5593  -.3211
   .040            -.2542   .2814
   .050    -.0983                   .4609   .5124   .5290   .5254
   .059                                                            -.1425
   .080                             .4154
```

REPRODUCIBILITY OF THE
ORIGINAL PAGE IS POOR

```
DATE 10 FEB 76            TABULATED PRESSURE DATA - OA148 ( AMES 11-073-1 )

                                  AMES 11-073(OA148) -140A/B/C/R ORB LEFT WING BOT              (XEBL29)

ALPHA ( 5) =   11.927    BETA  ( 3) =    4.253

 SECTION ( 1)LEFT WING BOT SURF                DEPENDENT VARIABLE CP

2Y/BW        .2930   .3640   .4270   .5340   .6730   .7800   .8870   .9720

  X/CW
   .081                      .2550
   .085             -.0107
   .094     -.0246
   .150                              .3800   .4446   .4682   .4077
   .157                                                              -.1198
   .163              .2369
   .177                      .3018
   .229      .0387
   .245              .1920
   .250                              .3730   .4056   .4174   .3448
   .274                      .3370
   .345                                                              -.0118
   .390              .3162
   .400                              .3512   .3749           .2835
   .402                      .3533
   .503                                                               .1301
   .550                              .2848   .2789
   .585                     -.5169
   .600                                                      .1890
   .537              .2725
   .650                                              .1709
   .670                                                               .2024
   .700                                      .2472
   .725                              .2340
   .750                                              .5958   .4871
   .760                      .2609
   .775                              .6530   .5319
   .798              .2748
   .808                      .5025
   .834      .1533
   .839              .4188
   .850                              .3151   .2174   .2742
   .857                      .3145
   .862                                                              -.0299
   .865      .4542
   .879              .2634
   .900      .2385                   .1538                   .1053
   .905                      .1512
   .919              .1313
   .950                              .0530   .1124   .1104
   .953                      .0604
   .955              .0477
   .965      .0477
  1.000                     -.2408          -.1256          -.5646
```

AMES 11-073(OA148) -140A/B/C/R ORB LEFT WING BOT (XEBL30) (05 AUG 75)

REFERENCE DATA

SREF = 2690.0000 SQ.FT. XMRP = 1076.6800 IN. XO
LREF = 474.8000 IN. YMRP = .0000 IN. YO
BREF = 936.0680 IN. ZMRP = 375.0000 IN. ZO
SCALE = .0300

PARAMETRIC DATA

RUDDER = -10.000 SPDBRK = 25.000
BDFLAP = 16.300 L-ELVN = [illegible]
R-ELVN = .000 MACH = [illegible]

ALPHA (1) = -3.994 BETA (1) = -3.852 MACH = 1.0997 Q = 600.21 P = 709.06 RN/L = 3.1508

SECTION (1)LEFT WING BOT SURF DEPENDENT VARIABLE CP

2Y/BW	.2390	.3540	.4270	.5340	.6730	.7800	.8870	.9720
X/CW								
.010	-.1769	-.3294	-.2763	-.6160	-.7384	-.5506	-.5466	
.020	.0000	-.3106	-.3675	-.7737	-.7777	-.6021	-.8023	-.8342
.040		-.2663	-.4137					
.050	-.1925			-.7269	-.7594	-.8344	-.8313	
.069								-.9259
.080				-.7017				
.081			-.2921					
.095		-.1377						
.094	-.1878							
.150				-.4724	-.6945	-.7336	-.7629	
.157								-.5120
.153		-.0670						
.177			-.2468					
.229	-.1495							
.246		-.1379						
.250				-.2731	-.5692	-.6684	-.6962	
.274			-.1992					
.345								-.8344
.393		-.1442						
.400				-.1564	-.1626		-.6181	
.432			-.1232					
.503								-.7658
.550				-.1271	-.1496			
.565			-.4314					
.600							-.2453	
.637		-.1073						
.650						-.1940		
.670								-.5453
.700					-.2077			
.725				-.2522				
.750						.3189	.1870	
.760			-.2100					
.775				.1948	.1474			
.798		-.1581						
.808			.1590					
[illegible]	-.2142							
[illegible]		.0437						
.850				.0338	-.0142	-.0131		

```
                                   AMES 11-073(OA148) -140A/B/C/R ORB LEFT WING BOT                (XEBL30)

ALPHA ( 1) =   -3.994    BETA  ( 1) =   -3.852

 SECTION ( 1)LEFT WING BOT SURF               DEPENDE..T VARIABLE CP

2Y/BW        .2990   .3640   .4270   .5340   .6730   .7800   .8870   .9720

  X/CW
   .857                      .0260
   .862                                                              -.3082
   .865      .1148
   .879             -.0441
   .900     -.1084                  -.1026                   -.1118
   .905                     -.1335
   .919             -.1793
   .950                             -.1959  -.1574  -.1914
   .953                     -.2173
   .955             -.2522
   .965     -.2632
  1.000                     -.0270          -.0761           -.0461
ALPHA ( 1) =   -3.985    BETA  ( 2) =     .190   MACH   =  1.0997     Q       =  600.21     P       =  709.06      RN/L    =  3.1908

 SECTION ( 1)LEFT WING BOT SURF               DEPENDENT VARIABLE CP

2Y/BW        .2990   .3640   .4270   .5340   .6730   .7800   .8870   .9720

  X/CW
   .010     -.1369  -.1613  -.1097  -.6132  -.7650  -.5997  -.60
   .020      .0000  -.1658  -.1459  -.7674  -.8099  -.8351  -.85    -.9039
   .040             -.1450  -.2441
   .050     -.1326                  -.6818  -.8161  -.8653  -.878
   .069                                                              .3717
   .080                             -.6335
   .081                     -.1802
   .086             -.0435
   .094     -.1365
   .150                             -.2808  -.6801  -.7605  -.7906
   .157                                                             -.5179
   .163              .0250
   .177                     -.1750
   .229     -.1020
   .245             -.0785
   .250                             -.1776  -.2206  -.6040  -.7319
   .274                     -.1345
   .345                                                             -.7963
   .330             -.0993
   .400                             -.1189  -.1245           -.4014
   .402                     -.1002
   .503                                                             -.5956
   .550                             -.1207  -.1470
   .555                     -.5514
   .600                                                      -.1465
```

```
                    AMES 11-073(OA148) -140A/B/C/R ORB LEFT WING BOT          (XEBL30)

ALPHA ( 1) =    -3.985    BETA  ( 2) =      .190

 SECTION ( 1)LEFT WING BOT SURF          DEPENDENT VARIABLE CP

2Y/BW        .2990     .3640     .4270     .5340     .6730     .7800     .8870     .9720

  X/CW
  .637                -.1126
  .650                                                    -.1977
  .670                                                                        -.3481
  .700                                          -.2223
  .725                                -.2448
  .750                                                     .2637     .2012
  .760                      -.2264
  .775                                 .1626     .1437
  .798                -.1593
  .808                       .1593
  .834      -.1677
  .839                 .0900
  .850                                 .0243    -.0319    -.0230
  .857                       .0119
[illegible]                                                                    -.1532
  .865       .0984
  .879                -.0315
  .900      -.0951                    -.0913                        -.1359
  .905                      -.1499
  .919                -.1705
  .950                                -.1941    -.1472    -.2029
  .953                      -.2283
  .955                -.2379
  .965      -.2670
 1.000                      -.1213              -.1972              -.0819
ALPHA ( 1) =    -3.992    BETA  ( 3) =     4.268   MACH   =  1.0997    Q      =  600.21    P      =  709.06    RN/L   =  3.1908

 SECTION ( 1)LEFT WING BOT SURF          DEPENDENT VARIABLE CP

2Y/BW        .2990     .3640     .4270     .5340     .6730     .7800     .8870     .9720

  X/CW
  .010      -.1250    -.0617     .0453    -.5814    -.7729    -.6331    -.6546
  .020       .0000    -.0584     .0207    -.7056    -.9088    -.8529    -.8725    -.8140
  .040                -.0395    -.1021
  .050      -.1042                        -.5757    -.7476    -.8380    -.8547
  .069                                                                        -.7382
  .080                                -.2918
  .091                      -.0775
  .096                 .0357
  .099      -.1036
  .150                                -.2212    -.3074    -.6449    -.7979
  .157                                                                        -.4108
  .163                 .1109
```

AMES 11-073(OA148) -140A/B/C/R ORB LEFT WING BOT (XEBL30)

ALPHA (1) = -3.992 BETA (3) = 4.268

SECTION (1)LEFT WING BOT SURF DEPENDENT VARIABLE CP

2Y/BW X/CW	.2990	.3640	.4270	.5340	.6730	.7800	.8870	.9720
.177			-.1028					
.229	-.0516							
.246		.0036						
.250				-.1365	-.1961	-.2635	-.4718	
.274			-.0705					
.345								-.5572
.390		-.0329						
.400				-.1067	-.1188		-.2289	
.402			-.0809					
.503								-.3997
.550				-.1318	-.1533			
.565			-.4160					
.600							-.1864	
.637		-.1121						
.650						-.2254		
.670								-.1451
.700					-.2491			
.725				-.2566				
.750						.2539	.1556	
.760			-.2365					
.775				.1452	.1409			
.798		-.1553						
.808			.1211					
.834	-.2067							
.839		.0366						
.850				.0195	-.0281	-.0108		
.857			-.0282					
.862								-.1994
.865	.0545							
.879		-.0677						
.900	-.1432			-.1165			-.1489	
.905			-.1848					
.919		-.1919						
.950				-.2183	-.1602	-.1817		
.953			-.2467					
.955		-.2485						
.965	-.2804							
1.000			-.2093		-.3112		-.1179	

AMES 11-073(OA148) -140A/B/C/R ORB LEFT WING BOT (XE8L30)

ALPHA (2) = -.020 BETA (1) = -3.866 MACH = 1.0986 Q = 599.48 P = 709.54 RN/L = 3.1886

SECTION (1)LEFT WING BOT SURF DEPENDENT VARIABLE CP

2Y/BW	[illegible]	[illegible]	.4270	.5340	.6730	.7800	.8870	.9720
X/CW								
.010	-.0479	-.0083	.2009	-.3410	-.4789	-.4032	-.3211	
.020	.0000	-.0430	.1184	-.4953	-.5591	-.5698	-.6031	-.4369
.040		-.0312	-.0714					
.050	-.0849			-.3191	-.4779	-.5717	-.6019	
.069								-.4353
.080				-.2652				
.081			-.0699					
.085		.0210						
.094	-.1080							
.150				-.1842	-.2190	-.3828	-.4729	
.157								-.2505
.163		.0840						
.177			-.0848					
.229	-.0797							
.245		-.0371						
.250				-.0637	-.0996	-.1013	-.0901	
.274			-.0435					
.345								-.0935
.390		-.0106						
.400				-.0046	.0135		-.0241	
.402			.0038					
.503								-.1466
.550				-.0096	-.0452			
.565			-.5238					
.600							-.1353	
.637		-.0042						
.650						-.1183		
.670								.0293
.700					-.1339			
.725				-.1528				
.750						.3691	.2628	
.760			-.0709					
.775				.3598	.2883			
.798		-.0315						
.808			.3099					
.834	-.1099							
.839		.2381						
.850				.1118	.0258	.0273		
.857			.1078					
.862								-.1798
.875	.2695							
.879		.0360						
.900	-.0123			-.0456			-.1081	
.905			-.0813					
.919		-.1267						

AMES 11-073(OA148) -140A/B/C/R ORB LEFT WING BOT (XE8L30)

ALPHA (2) = -.020 BETA (1) = -3.866

SECTION (1)LEFT WING BOT SURF DEPENDENT VARIABLE CP

2Y/BW	.2990	.3640	.4270	.5340	.6730	.7800	.8870	.9720
X/CW								
.950				-.1646	-.1020	-.1625		
.953			-.1756					
.955		-.1902						
.965	-.2333							
1.000			.0116		-.0014		-.2387	

ALPHA (2) = -.014 BETA (2) = .187 MACH = 1.0986 Q = 599.48 P = 709.54 RN/L = 3.1886

SECTION (1)LEFT WING BOT SURF DEPENDENT VARIABLE CP

2Y/BW	.2990	.3640	.4270	.5340	.6730	.7800	.8870	.9720
X/CW								
.010	-.1010	-.0079	.2753	-.2802	-.4635	-.4228	-.3381	
.020	.0000	-.0180	.2138	-.2705	-.4098	-.5496	-.6022	-.2300
.040		-.0045	.0570					
.050	-.1064			-.2472	-.3663	-.4630	-.4809	
.069								-.2153
.090				-.1621				
.081			.0021					
.085		.0598						
.094	-.1053							
.150				-.1173	-.0830	-.0731	-.1293	
.157								-.1552
.163		.1554						
.177			-.0320					
.229	-.0672							
.246		.0189						
.250				-.0256	-.0593	-.0750	-.1229	
.274			-.0017					
.345								-.1253
.390		.0170						
.400				.0178	.0366		-.0261	
.402			.0141					
.503								-.1644
.550				-.0065	-.0366			
.565			-.6230					
.600							-.1637	
.637		-.0083						
.650						-.1422		
.670								.0331
.700					-.1500			
.725				-.1570				
.750						.3369	.2370	
[illegible]			-.1162					

```
                                   AMES 11-073(OA148) -140A/B/C/R ORB LEFT WING BOT              (XEBL30)

ALPHA ( 2) =    -.014    BETA  ( 2) =      .187

 SECTION ( 1)LEFT WING BOT SURF             DEPENDENT VARIABLE CP

2Y/BW        .2990   .3640   .4270   .5340   .6730   .7800   .8870   .9720

  X/CW
   .775                              .3543   .2667
   .798             -.0564
   .808                      .3030
   .834    -.1044
   .839              .2445
   .850                              .1021   .0257   .0310
   .857                      .1033
   .862                                                              -.2172
   .865     .2590
   .879              .0195
   .900    -.0045                   -.0641                  -.1092
   .905                     -.0732
   .919             -.1046
   .950                             -.1694  -.1142  -.1521
   .953                     -.1732
   .955             -.1777
   .985    -.2130
  1.000                     -.0481          -.0759          -.0630

ALPHA ( 2) =    -.017    BETA  ( 3) =     4.244   MACH   =  1.0986     Q      =  599.48     P      =  709.54     RN/L   =  3.1886

 SECTION ( 1)LEFT WING BOT SURF             DEPENDENT VARIABLE CP

2Y/BW        .2990   .3640   .4270   .5340   .6730   .7800   .8870   .9720

  X/CW
   .010    -.2044  -.0389   .3440  -.0873  -.3233  -.3667  -.2994
   .020     .0000  -.0165   .2992  -.1047  -.2555  -.3604  -.4726  -.1698
   .040             .0085   .1679
   .050    -.1471                   -.0955  -.2351  -.2795  -.3520
   .060                                                             -.1777
   .080                             -.0708
   .081                      .0978
   .086             .0263
   .094    -.1215
   .150                             -.0271  -.0447  -.0924  -.1235
   .157                                                             -.1642
   .163             .1979
   .177                      .0441
   .229    -.0616
   .246             .0807
   .250                              .0038  -.0404  -.0666  -.1105
   .274                      .0502
   .345                                                             -.1665
   .330             .0556
```

```
                                  AMES 11-073(OA148) -140A/B/C/R ORB LEFT WING BOT              (XE8L30)

ALPHA ( 2) =    -.017    BETA  ( 3) =    4.244

 SECTION ( 1)LEFT WING BOT SURF            DEPENDENT VARIABLE CP

2Y/BW       .2990   .3640   .4270   .5340   .6730   .7800   .8870   .9720

  X/CW
    .400                            .0194   .0209           -.0466
    .402                    .0332
    .503                                                            -.1843
    .550                           -.0309  -.0513
    .565                   -.4868
    .600                                                    -.1791
    .637           -.0182
    .650                                           -.1495
    .670                                                             .0320
    .700                                   -.1606
    .725                           -.1734
    .750                                            .3185   .2483
    .760                   -.1505
    .775                            .3399   .2634
    .798           -.0243
    .808                    .2486
    .834   -.1055
    .839            .1470
    .850                            .0918   .0216   .0453
    .857                    .0602
    .662                                                            -.2375
    .855    .1610
    .879           -.0078
    .900   -.0519                  -.0775                   -.0970
    .905                   -.1111
    .919           -.1196
    .950                           -.1888  -.1235  -.1507
    .953                   -.1958
    .955           -.1847
    .965   -.2124
   1.000                   -.1321          -.1800           -.1067
ALPHA ( 3) =    3.959   BETA  ( 1) =  -3.869  MACH   =  1.1006    Q     =  600.44    P     =  708.14    RN/L   =  3.1894

 SECTION ( 1)LEFT WING BOT SURF            DEPENDENT VARIABLE CP

2Y/BW       .2990   .3640   .4270   .5340   .6730   .7800   .8870   .9720

  X/CW
    .010   -.0302  -.0673   .4629   .1869   .0999   .1968   .2321
    .020    .0000  -.0052   .4050   .0572   .0950   .1052   .0955   .0696
    .040            .0260   .2372
    .050   -.0228                   .0445   .0538   .0692   .1114
    .060                                                             .0350
    .080                            .0445
```

AMES 11-073(OA148) -140A/B/C/R ORB LEFT WING BOT (XEBL30)

ALPHA (3) = 3.958 BETA (1) = -3.869

SECTION (1)LEFT WING BOT SURF DEPENDENT VARIABLE CP

2Y/BW	.2990	.3640	.4270	.5340	.6730	.7800	.8870	.9720
X/CW								
.081			.1401					
.086		.1186						
.094	-.0406							
.150				.0958	.1287	.1405	.1023	
.157								-.0810
.163		.2338						
.177			.0921					
.229	-.0398							
.245		.0397						
.250				.1450	.1422	.1242	.0705	
.274			.1517					
.345								-.0508
.390		.1578						
.400				.1637	.1680		.0897	
.402			.1821					
.503								-.0786
.550				.0906	.0624			
.555			-.5786					
.600							-.0597	
.637		.1013						
.650						-.0612		
.670								.1117
.700					-.0945			
.725				-.0378				
.750						.4972	.3648	
.760			.0945					
.775				.5489	.4355			
.798		.1460						
.808			.4045					
.834	.0442							
.839		.3115						
.850				.1594	.0572	.0950		
.857			.1609					
.862								-.1549
.865	.3749							
.909		.0842						
.910	.0431			-.0203			-.0443	
.915			-.0485					
.919		-.0748						
.950				-.1316	-.0559	-.1059		
.953			-.1459					
.955		-.1593						
.965	-.2038							
1.000			.0418		-.0200		-.4906	

REPRODUCIBILITY OF THE ORIGINAL PAGE IS POOR

AMES 11-073(OA148) -140A/B/C/R ORB LEFT WING BOT (XE8L30)

ALPHA (3) = 3.959 BETA (2) = .177 MACH = 1.1006 Q = 600.44 P = 708.14 RN/L = 3.1894

SECTION (1)LEFT WING BOT SURF DEPENDENT VARIABLE CP

2Y/BW	.2990	.3640	.4270	.5340	.6730	.7800	.8870	.9720
X/CW								
.010	-.1681	-.1976	.4320	.2741	.1874	.2678	.2859	
.020	.0000	-.0878	.4185	.1566	.1442	.1459	.1726	.0022
.040		-.0461	.2874					
.050	-.0875			.1235	.0958	.1129	.1426	
.069								-.0049
.080				.1024				
.081			.1792					
.096		.1014						
.104	-.0838							
.150				.1322	.1349	.1660	.1021	
.157								-.0993
.163		.2701						
.177			.1325					
.200	-.0569							
.246		.1377						
.250				.1270	.1444	.1464	.0683	
.274			.1452					
.345								-.0942
.393		.1556						
.400				.1454	.1706		.0771	
.432			.1648					
.503								-.1125
.550				.0872	.0650			
.565			-.6777					
.600							-.0750	
.637		.0913						
.650						-.0625		
.670								.0893
.700					-.0904			
.725				-.0194				
.750						.4663	.3668	
.760			.0967					
.775				.5275	.4265			
.798		.1315						
.818			.3916					
.834	.0340							
.839		.2905						
.850				.1543	.0475	.0893		
.867			.1537					
.882								-.1822
.895	.3048							
[illegible]		.0857						
.900	.0512			-.0265			-.0417	
.905			-.0413					
.919		-.0670						

```
DATE 10 FEB 76              TABULATED PRESSURE DATA - OA148 ( AMES 11-073-1 )                                          PAGE 1934

                                        AMES 11-073(OA148) -140A/B/C/R ORB LEFT WING BOT                  (XE8L30)

ALPHA ( 3) =     3.959    BETA  ( 2) =      .177

 SECTION ( 1)LEFT WING BOT SURF              DEPENDENT VARIABLE CP

2Y/BW         .2990   .3640   .4270   .5340   .6730   .7800   .8870   .9720

  X/CW
    .950                              -.1387  -.0757  -.1062
    .953                      -.1417
    .955              -.1493
    .965      -.1780
   1.000                      -.0145          -.0434          -.4769

ALPHA ( 3) =     3.960    BETA  ( 3) =    4.234   MACH   =  1.1006     Q       =  600.44     P       =  708.14     RN/L   =  3.1894

 SECTION ( 1)LEFT WING BOT SURF              DEPENDENT VARIABLE CP

2Y/BW         .2990   .3640   .4270   .5340   .6730   .7800   .8870   .9720

  X/CW
    .010      -.3615  -.3314   .3962   .3739   .2620   .3189   .3270
    .020       .0000  -.1714   .4292   .2678   .2285   .2188   .2169  -.1364
    .040              -.1190   .3414
    .050      -.1711                   .2156   .1639   .1517   .1682
    .063                                                              -.1009
    .080                               .1877
    .081                       .2483
    .086               .0767
    .094      -.1416
    .150                               .1719   .1667   .1633   .1100
    .157                                                              -.1359
    .163               .2857
    .177                       .2004
    .229      -.0798
    .246               .1916
    .250                               .1677   .1454   .1439   .0578
    .274                       .1857
    .345                                                              -.1593
    .390               .1892
    .400                               .1483   .1541           .0500
    .402                       .1753
    .503                                                              -.1524
    .550                               .0842   .0513
    .575                      -.5785
    .600                                                      -.1153
    .637               .0859
    .650                                              -.0804
    .670                                                               .0577
    .700                                      -.0962
    .725                              -.6379
    .750                                               .4452   .3333
    .760                       .0674
```

```
DATE 10 FEB 75              TABULATED PRESSURE DATA - OA148 ( AMES 11-073-1 )                                        PAGE 1935

                                     AMES 11-073(OA148) -140A/B/C/R ORB LEFT WING BOT                  (XEBL30)
ALPHA ( 3)      3.960    BETA  ( 3) =    4.234
 SECTION ( 1)LEFT WING BOT SURF                    DEPENDENT VARIABLE CP

2Y/BW         .2950   .3640   .4270   .5340   .6730   .7800   .8870   .9720

  X/CW
   .775                               .5017   .3825
   .798               .1028
   .808                       .3376
   .834       .0083
   .839               .2384
   .850                               .1318   .0371   .0773
   .857                       .1281
   .862                                                               -.2139
   .865       .2719
   .879               .0565
   .900       .0363                  -.0462                   -.0597
   .905                      -.0544
   .919              -.0781
   .950                              -.1560  -.0929  -.1068
   .953                      -.1520
   .955              -.1492
   .965      -.1639
  1.000                      -.1189           -.1049           -.3979
ALPHA ( 4) =    8.035    BETA  ( 1) =   -3.862   MACH   =  1.0985     Q      =  599.52     P      =  709.77     RN/L   =  3.1893
 SECTION ( 1)LEFT WING BOT SURF                    DEPENDENT VARIABLE CP

2Y/BW         .2390   .3640   .4270   .5340   .6730   .7800   .8870   .9720

  X/CW
   .010      -.1251  -.3981   .4573   .6119   .5787   .6284   .6122
   .020       .0000  -.1584   .5335   .4997   .5137   .5247   .5137  -.0275
   .040              -.1006   .4650
 [illegible]  .0105                   .4006   .4047   .4187   .4208
 [illegible]                                                           .0367
 [illegible]                          .3565
 [illegible]                  .3652
 [illegible]          .0356
 [illegible]  .0031
 [illegible]                          .3262   .3474   .3496   .2915
 [illegible]                                                          -.0650
 [illegible]          .3581
 [illegible]                  .3050
 [illegible]  .0124
 [illegible]          .2735
 [illegible]                          .3043   .3032   .2965   .2282
 [illegible]                  .3000
 [illegible]                                                           .0258
 [illegible]          .2958
```

```
                                   AMES 11-073(OA148) -140A/B/C/R ORB LEFT WING BOT               (XEBL30)

ALPHA ( 4) =    8.035    BETA  ( 1) =   -3.862

 SECTION ( 1)LEFT WING BOT SURF              DEPENDENT VARIABLE CP

2Y/BW       .2990    .3640    .4270    .5340    .6730    .7800    .8870    .9720

  X/CW
   .400                                 .2660    .2716             .1845
   .402                       .2937
   .503                                                                      .1318
   .550                                 .1782    .1632
   .565                     -.6508
   .600                                                            .1730
   .637              .1756
   .650                                                   .2153
   .670                                                                      .1655
   .700                                          .2333
   .725                                 .2512
   .750                                                   .5079    .3833
   .760                       .2590
   .775                                 .6120    .4605
   .798              .2835
   .809                       .4549
   .814     .2037
   .840              .3559
   .850                                 .1902    .0789    .1296
   .857                       .1971
   .862                                                                     -.1260
   .865     .4415
   .879              .1235
   .900     .0902                       .0096                      -.0067
   .905                     -.0102
   .919            -.2372
   .950                               -.0932   -.0189   -.0568
   .953                     -.1044
   .955            -.1299
   .965   -.1582
  1.000                       .0253             -.1512             -.5946
ALPHA ( 4) =    8.041    BETA  ( 2) =     .181    MACH   =  1.0985     Q     =  599.52     P     =  709.77     RN/L   =  3.1893

 SECTION ( 1)LEFT WING BOT SURF              DEPENDENT VARIABLE CP

2Y/BW       .2990    .3640    .4270    .5340    .6730    .780     .8870    .9720

  X/CW
   .010   -.3404   -.6392    .2994    .6113    .5706    .6085    .5788
   .020    .0000   -.3151    .4430    .5225    .5187    .5163    .5010   -.1683
   .040            -.2378    .4610
   .060   -.0925                      .4248    .4273    .4309    .4157
   .070                                                                     -.0736
   .080                                 .3771
```

AMES 11-073(OA148) -140A/B/C/R ORB LEFT WING BOT (XEBL30)

ALPHA (4) = 8.041 BETA (2) = .181

SECTION (1)LEFT WING BOT SURF DEPENDENT VARIABLE CP

2Y/BW	.2990	.3640	.4270	.5340	.6730	.7800	.8870	.9720
X/CW								
.081			.3890					
.086		.0102						
.094	-.0569							
.150				.3368	.3480	.3569	.2819	
.157								-.0980
.163		.3490						
.177			.3327					
.223	-.0316							
.246		.2809						
.257				.3133	.3139	.3018	.2204	
.274			.3119					
.345								-.0140
.390		.2981						
.400				.2701	.2727		.1768	
.402			.2896					
.503								.0964
.550				.1750	.1625			
.565			-.7168					
.600							.1707	
.637		.1769						
.650						.2064		
.670								.1130
.700					.2312			
.725				.2489				
.750						.5010	.3693	
.760			.2551					
.775				.6007	.4472			
.798		.2730						
.808			.4392					
[illegible]	.1948							
[illegible]		.3389						
.850				.1871	.0816	.1253		
.857			.1931					
.862								-.1624
.865	.4116							
.879		.1313						
.900	.1057			.0056			-.0030	
.915			-.0031					
[illegible]		-.0283						
[illegible]				-.0970	-.0371	-.0599		
[illegible]			-.1034					
.955		-.1145						
.975	-.1335							
1.000			-.0242		-.0799		-.6748	

AMES 11-073(OA148) -140A/B/C/R ORB LEFT WING BOT (XEBL30)

ALPHA (4) = 8.040 BETA (3) = 4.238 MACH = 1.0985 Q = 599.52 P = 709.77 RN/L = 3.1893

SECTION (1)LEFT WING BOT SURF DEPENDENT VARIABLE CP

2Y/BW	.2990	.3640	.4270	.5340	.6730	.7800	.8870	.9720
X/CW								
.010	-.5567	-.4445	.1892	.5823	.5389	.5459	.5059	
.020	.0000	-.3532	.3415	.5217	.5024	4934	.4619	-.3498
.040		-.2831	.4240					
.050	-.1945			.4421	.4206	.4079	.3893	
.069								-.2063
.080				.3888				
.081			.3835					
.065		-.0054						
.094	-.1269							
.110				.3374	.3453	.3364	.2606	
.157								-.1529
.164		.3317						
.177			.3451					
.223	-.0672							
.246		.2892						
.250				.3032	.2952	.2821	.1932	
.274			.3115					
.345								-.0871
.390		.3034						
.400				.2559	.2518		.1380	
.402			.2808					
.503								.0600
.550				.1618	.1419			
.565			-.6248					
.600							.1325	
.637		.1654						
.650						.1781		
.670								.0549
.700					.2071			
.725				.2169				
.750						.4670	.3464	
.760			.2282					
.775				.5495	.4141			
.798		.2321						
.808			.3959					
.834	.1384							
.839		.3097						
.850				.1677	.0571	.1090		
.857			.1753					
.852								-.1990
.855	.3751							
.879		.1259						
.900	.1049			-.0088			-.0336	
.905			-.0076					
.919		-.0278						

```
                                  AMES 11-073(OA148) -140A/B/C/R ORB LEFT WING BOT              (XEBL30)

ALPHA ( 4 =    8.040    BETA  ( 3) =    4.238

 SECTION ( 1)LEFT WING BOT SURF              DEPENDENT VARIABLE CP

2Y/BW        .2990   .3540   .4270   .5340   .6730   .7800   .8870   .9720

  X/CW
    .950                             -.1150  -.0528  -.0679
    .953                     -.1054
    .955             -.1050
    .955    -.1144
   1.000                     -.1032          -.1144          -.6867

ALPHA ( 5) =   11.975    BETA  ( 1) =   -3.843   MACH   =  1.0970     Q      =  599.10     P      =  711.19     RN/L   =  3.1892

 SECTION ( 1)LEFT WING BOT SURF              DEPENDENT VARIABLE CP

2Y/BW        .2990   .3540   .4270   .5340   .6730   .7800   .8870   .9720

  X/CW
    .010    -.2944  -.5755   .2303   .7399   .7390   .7326   .6825
    .020     .0300  -.2109   .4554   .6951   .7090   .7045   .6648  -.1984
    .040            -.1299   .5509
    .050     .0119                   .6080   .6171   .6169   .5902
    .069                                                             -.0306
    .080                             5437
    .081                     .5139
    .095             .1956
    .094     .0616
    .150                             .4826   .5081   .5099   .4411
    .157                                                             -.0585
    .163             .4598
    .177                     .4504
    .229     .0889
    .246             .3957
    .250                             .4361   .4424   .4360   .3695
    .274                     .4238
    .345                                                              .1230
    .390             .4002
    .400                             .3775   .3843           .3138
    .402                     .3917
    .503                                                              .1506
    .550                             .2852   .2872
    .565                    -.6868
    .600                                                     .2705
    .637             .2639
    .650                                             .2981
    .670                                                              .1910
    .700                                     .2964
    .725                             .3091
    .780                                             .5298   .4114
    .741                     .3058
```

```
                                   AMES 11-073(OA148) -140A/B/C/R ORB LEFT WING BOT              (XEBL30)

ALPHA ( 5) =   11.975   BETA  ( 1) =    -3.843

 SECTION ( 1)LEFT WING BOT SURF                  DEPENDENT VARIABLE CP

2Y/BW        .2990    .3640    .4270    .5340    .6730    .7800    .8870    .9720

  X/CW
   .775                                  .6380    .4715
   .798               .3264
   .808                        .4771
   .834      .2519
   .839               .3767
   .850                                  .2190    .1052    .1699
   .857                        .2246
   .862                                                                     -.0858
   .865      .4760
   .879               .1595
   .900      .1276                       .0421                       .0476
   .905                        .0253
   .919               .0005
   .950                                 -.0546   -.0025    .0075
   .953                       -.0594
   .955              -.0882
   .965     -.1118
  1.000                       -.0575             -.2473             -.5593
ALPHA ( 5) =   11.985   BETA  ( 2) =     .181   MACH   =  1.0970     Q      =  599.10     P      =  711.19     RN/L   =  3.1392

 SECTION ( 1)LEFT WING BOT SURF                  DEPENDENT VARIABLE CP

2Y/BW        .2990    .3640    .4270    .5340    .6730    .7800    .8870    .9720

  X/CW
   .010     -.5000   -.6470   -.0089    .6626    .6719    .6344    .5905
   .020      .0000   -.3322    .2722    .6633    .6668    .6546    .6048   -.3477
   .040              -.2436    .4651
   .050     -.0942                       .5975    .6109    .5926    .5570
   .069                                                                     -.1436
   .080                                  .5397
   .081                        .4847
   .086               .0865
   .094     -.0200
   .150                                  .4769    .5038    .5002    .4193
   .157                                                                     -.1034
   .163               .3964
   .177                        .4597
   .229      .0452
   .246               .3697
   .250                                  .4353    .4387    .4257    .3496
   .274                        .4224
   .345                                                                      .0682
   .390               .3985
```

REPRODUCIBILITY OF TH
ORIGINAL PAGE IS POOR

```
DATE 10 FEB 76            TABULATED PRESSURE DATA - OA148 ( AMES 11-073-1 )                                  PAGE 1941

                                  AMES 11-073(OA148) -140A/B/C/R ORB LEFT WING BOT                  (XEBL3Q)

ALPHA ( 5) =   11.985    BETA  ( 2) =      .181

 SECTION ( 1)LEFT WING BOT SURF                DEPENDENT VARIABLE CP

2Y/BW         .2990     .3640     .4270     .5340     .6730     .7800     .8870     .9720

  X/CW
    .400                                    .3726     .3779               .2921
    .402                          .3877
    .503                                                                            .1072
    .550                                    .2833     .2836
    .565                         -.7228
    .600                                                                  .2464
    .637                .2667
    .650                                                        .2855
    .670                                                                            .1523
    .700                                              .2923
    .725                                    .3065
    .750                                                        .5092     .3919
    .760                          .3029
    .775                                    .6262     .4579
    .798                .3240
    .808                          .4630
    .834      .2441
    .833                .3693
    .850                                    .2156     .0998     .1638
    .857                          .2245
    .862                                                                           -.1136
    .865      .4614
    .879                .1684
    .900      .1446                         .0399                         .0433
    .905                          .0325
    .919                .0093
    .940                                   -.0567     .0059    -.0081
    .953                         -.0570
    .955               -.0750
    .985     -.0847
   1.000                         -.1279               -.1895              -.6732
ALPHA ( 5) =   11.977    BETA  ( 3) =    4.250   MACH   =  1.0970     Q      =  599.10     P      =  711.19     RN/L   =  3.1892

 SECTION ( 1)LEFT WING BOT SURF                DEPENDENT VARIABLE CP

2Y/BW         .2990     .3640     .4270     .5340     .6730     .7800     .8870     .9720

  X/CW
    .010     -.6478    -.6773    -.1737     .5698     .5788     .5130     .4708
    .020      .0000    -.4586     .1292     .6013     .5964     .5751     .5139    -.4807
    .040               -.3674     .3964
    .050     -.1991                         .5597     .5596     .5345     .4914
    .060                                                                           -.2627
    [illegible]                             [illegible]
```

AMES 11-073(OA148) -140A/B/C/R ORB LEFT WING BOT (XEBL30)

ALPHA (5) = 11.977 BETA (3) = 4.250

SECTION (1)LEFT WING BOT SURF DEPENDENT VARIABLE CP

2Y/BW	.2930	.3640	.4270	.5340	.6730	.7800	.8870	.9720
X/CW								
.081			.4537					
.086		-.0393						
.094	-.1014							
.150				.4518	.4654	.4604	.3726	
.157								-.1546
.163		.3465						
.177			.4437					
.229	-.0180							
.245		.3458						
.250				.4045	.4039	.3947	.3109	
.274			.4068					
.345								-.0054
.390		.3852						
.400				.3421	.3474		.2555	
.402			.3600					
.503								.0498
.550				.2551	.2592			
.555			-.6856					
.600							.2113	
.637		.2418						
.650						.2573		
.670								.0827
.700					.2698			
.725				.2847				
.750						.4713	.3603	
.760			.2843					
.775				.5819	.4240			
.798		.2990						
.808			.4295					
.834	.2192							
.839		.3492						
.850				.1368	.0796	.1410		
.857			.2099					
.862								-.1539
.865	.4398							
.879		.1636						
.900	.1485			.0256			.0098	
.905			.0278					
.919		.0131						
.950				-.0743	-.0129	-.0231		
.953			-.0621					
.955		-.0690						
.965	-.0653							
1.000			-.2333		-.1939		-.7518	

```
                        AMES 11-073(OA148) -140A/B/C/R ORB LEFT WING BOT          (XEBL31)   ( 05 AUG 75  )

              REFERENCE DATA                                                        PARAMETRIC DATA

SPREF  =  2690.0000 SQ.FT.   XMRP  =  1076.6800 IN. XO                RUDDER =   -10.000   SPDBRK =    35.000
LREF   =   474.8000 IN.      YMRP  =      .0000 IN. YO                BDFLAP =    16.300   L-ELVN =    10.000
BREF   =   936.0680 IN.      ZMRP  =   375.0000 IN. ZO                R-ELVN =      .000   MACH   =      .900
SCALE  =      .0300

ALPHA ( 1) =   -3.977   BETA  ( 1) =   -3.652   MACH   =  .89977    Q     =  600.28    P     =  1059.2    RN/L   =  3.5777

 SECTION ( 1)LEFT WING BOT SURF              DEPENDENT VARIABLE CP

2Y/BW       .2990    .3640    .4270    .5340    .6730    .7800    .8870    .9720

  X/CH
    .010   -.1337   -.2927   -.4896  -1.0783  -1.2471  -1.0185  -1.0313
    .020    .0000   -.2522   -.5306  -1.2599  -1.3078  -1.3235  -1.3376   -.9293
    .040            -.2232   -.6513
    .050   -.1333                     -1.1519  -1.3073  -1.3614  -1.3632
    .063                                                                   -.6789
    .080                              -1.0602
    .091                     -.4759
    .086            -.1144
    .094   -.1174
    .150                               -.6061  -1.1317  -1.2082  -1.2483
    .157                                                                   -.3548
    .163            -.1705
    .177                     -.4709
    .229   -.0550
    .245            -.3128
    .250                               -.3996   -.4252   -.7555   -.7514
    .274                     -.3706
    .345                                                                   -.4027
    .390            -.3390
    .400                               -.2520   -.2053            -.4182
    .402                     -.2458
    .503                                                                   -.3079
    .550                               -.2097   -.1521
    .565                     -.7701
    .600                                                          -.0727
    .637            -.2726
    .650                                                 -.0404
    .670                                                                   -.2068
    .700                                        -.0472
    .725                               -.0251
    .750                                                  .1464    .0553
    .760                     -.0148
    .775                                .1919    .1049
    .798             .0052
    .809                      .1203
    .834   -.0642
    .839             .0213
    .840                               -.1163   -.1758   -.1570
```

AMES 11-073(OA148) -140A/B/C/R ORB LEFT WING BOT (XEBL31)

ALPHA (' -3.977 BETA (1) = -3.852

SECTION .)LEFT WING BOT SURF DEPENDENT VARIABLE CP

2Y/BW	.2990	.3640	.4270	.5340	.6730	.7800	.8870	.9720
X/CW								
.857			-.1306					
.862								-.1556
.865	.0855							
.879		-.1890						
.900	-.2141			-.2267			-.1120	
.905			-.2795					
.919		-.2515						
.950				-.1729	-.1514	-.1428		
.953			-.1623					
.955		-.1580						
.965	-.1387							
1.000			-.0058		-.0553		.0172	

ALPHA (1) = -3.975 BETA (2) = .187 MACH = .89977 Q = 600.28 P = 1059.2 RN/L = 3.5777

SECTION (1)LEFT WING BOT SURF DEPENDENT VARIABLE CP

2Y/BW	.2990	.3640	.4270	.5340	.6730	.7800	.8870	.9720
X/CW								
.010	-.0430	- 1191	-.3144	-1.0706	-1.2684	-1.0619	-1.0624	
.020	.0000	-.0926	-.3610	-1.2293	-1.3237	-1.3503	-1.0242	-.5363
.040		-.0784	-.4674					
.050	-.0564			-1.1091	-1.2557	-1.2776	-.9956	
.069								-.4685
.080				-.6722				
.081			-.3898					
.085		-.0270						
.094	-.0591							
.150				-.4385	-.6451	-.9890	-.8493	
.157								-.3090
.163		-.0877						
.177			-.3978					
.229	-.0123							
.246		-.2475						
.250				-.3470	-.3826	-.6050	-.7152	
.274			-.3130					
.345								-.3463
.390		-.2805						
.430				-.2461	-.2568		-.5195	
.402			-.2219					
.503								-.2839
.550				-.2839	-.2424			
.555			-.7069					
.600							-.2341	

```
                                   AMES 11-073(OA148) -140A/B/C/R ORB LEFT WING BOT              (XEBL31)

ALPHA ( 1) =   -3.975    BETA  ( 2) =      .187

 SECTION ( 1)LEFT WING BOT SURF              DEPENDENT VARIABLE CP

2Y/BW        .2990   .3640   .4270   .5340   .6730   .7800   .8870   .9720

  X/CW
    .637             -.2815
    .650                                             -.0871
    .670                                                             -.2235
    .700                                     -.0703
    .725                             -.0411
    .750                                              .1406  -.0795
    .760                     -.0257
    .775                              .2136   .1183
    .798              .0000
    .808                      .1166
    .834     -.0794
    .839              .0250
    .850                             -.1308  -.2327  -.1881
    .857                     -.1271
    .862                                                             -.1632
    .865      .0963
    .879             -.1790
    .900     -.2000                  -.3016                  -.1177
    .905                     -.3118
    .919             -.2908
    .950                             -.2522  -.2436  -.2369
    .953                     -.1985
    .955             -.1897
    .965     -.1540
   1.000                     -.0706          -.1272          -.0830
ALPHA ( 1) =   -3.986    BETA  ( 3) =    4.269   MACH  =  .89977    Q     =  600.28    P     =  1059.2    RN/L  =  3.5777

 SECTION ( 1)LEFT WING BOT SURF              DEPENDENT VARIABLE CP

2Y/BW        .2990   .3640   .4270   .5340   .6730   .7800   .8870   .9720

  X/CW
    .010      .0052  -.0031  -.1547 -1.0391 -1.0833 -1.0848  -.8947
    .020      .0000   .0066  -.2157 -1.0942 -1.0971 -1.1224  -.8774  -.5343
    .040              .0179  -.3084
    .050     -.0156                  -.6812 -1.2303 -1.1115  -.8687
    .069                                                             -.4917
    .080                             -.5321
    .081                     -.3077
    .086              .0333
    .094     -.0169
    .150                             -.4256  -.4860  -.8958  -.7919
    .157                                                             -.3159
    .163             -.0262
```

DATE 10 FEB 76　　TABULATED PRESSURE DATA - OA148 (AMES 11-073-1)

AMES 11-073(OA148) -140A/B/C/R ORB LEFT WING BOT　　(XEBL31)

ALPHA (1) = -3.985　　BETA (3) = 4.269

SECTION (1)LEFT WING BOT SURF　　DEPENDENT VARIABLE CP

2Y/BW	.2930	.3640	.4270	.5340	.6730	.7800	.8870	.9720
X/CW								
.177			-.3084					
.229	.0176							
.245		-.2080						
.250				-.3286	-.3405	-.5336	-.7173	
.274			-.2836					
.345								-.3354
.390		-.2434						
.400				-.2490	-.2604		-.4874	
.402			-.2240					
.503								-.2572
.550				-.3015	-.2829			
.565			-.7655					
.600							-.1888	
.637		-.2814						
.650						-.0740		
.670								-.2300
.700					-.0566			
.725				-.0428				
.750						.1843	-.0024	
.760			-.0353					
.775				.2508	.1157			
.793		-.0179						
.808			.1056					
.834	-.0862							
.839		.0280						
.850				-.1355	-.2251	-.2075		
.867			-.1134					
[illegible]								-.1895
[illegible]	.0616							
.879		-.1577						
.900	-.1724			-.3164			-.1827	
.905			-.3077					
.919		-.2785						
.950				-.3148	-.2949	-.2788		
.953			-.2545					
[illegible]		-.2217						
.985	-.1686							
1.000			-.1266		-.1552		-.1211	

```
                                       AMES 11-073(OA148) -140A/B/C/R ORB LEFT WING BOT                (XEBL31)
ALPHA ( 2) =     -.002    BETA  ( 1) =    -3.870   MACH    =  .89780     Q      =  598.63     P      =  1060.9     RN/L    =  3.5706
 SECTION ( 1)LEFT WING BOT SURF                   DEPENDENT VARIABLE CP
2Y/BW        .2990    .3640    .4270    .5340    .6730    .7800    .8870    .9720
  X/CW
   .010     .0337    .0855    .0997   -.6600   -.8186   -.7511   -.6216
   .020     .0000    .0716   -.0144   -.6253   -.7515   -.7455   -.8762   -.2897
   .040              .0779   -.1738
   .050     .0028                     -.5263   -.5794   -.6617   -.7445
   .069                                                                  -.3263
   .080                               -.3452
   .081                      -.2038
   .086              .0906
   .094    -.0102
   .150                               -.2166   -.2214   -.2402   -.2446
   .157                                                                  -.2340
   .163              .0200
   .177                      -.1847
   .229     .0256
   .246             -.1343
   .250                               -.1472   -.1924   -.2251   -.2474
   .274                      -.1253
   .345                                                                  -.2435
   .390             -.1048
   .400                               -.1188   -.1267            -.1621
   .402                      -.0809
   .503                                                                  -.1441
   .550                               -.1699   -.1593
   .565                      -.8572
   .600                                                          -.0759
   .637             -.1793
   .650                                                 -.0414
   .670                                                                  -.1310
   .700                                        -.0343
   .725                               -.0126
   .750                                                  .2189    .0959
   .760                       .0058
   .775                                .2876    .1738
   .798              .0360
   .808                       .1596
   .834    -.0345
   .839              .0689
   .850                               -.1051   -.1855   -.1757
   .857                      -.1055
   .862                                                                  -.3122
   .865     .1609
[illegible]         -.1806
[illegible] -.2055                    -.2388                     -.3275
   .905                      -.2858
   .919             -.2746
```

```
                              AMES 11-073(OA148) -140A/B/C/R ORB LEFT WING BOT                 (XEBL31)

ALPHA ( 2) =    -.002    BETA  ( 1) =    -3.870

 SECTION ( 1)LEFT WING BOT SURF               DEPENDENT VARIABLE CP

2Y/BW        .2990    .3640    .4270    .5340    .6730    .7800    .8870    .9720

  X/CW
    .950                                 -.1749   -.1191   -.1099
    .953                        -.1592
    .955               -.1579
    .965      -.1294
   1.000                         .0014             -.0168             0656
ALPHA ( 2) =      .000    BETA  ( 2) =     .184    MACH   =   .89780      Q      =  598.63     P      =  1060.9     RN/L   =  3.5706

 SECTION ( 1)LEFT WING BOT SURF               DEPENDENT VARIABLE CP

2Y/BW        .2990    .3640    .4270    .5340    .6730    .7800    .8870    .9720

  X/CW
    .010      .0314    .1060    .1600   -.4748   -.6754   -.6920   -.6239
    .020      .0000    .1044    .0993   -.4814   -.5990   -.6069   -.7619   -.3039
    .040               .1221   -.0613
    .050      .0182                      -.3594   -.4602   -.5376   -.6480
    .063                                                                    -.3292
    .080                                 -.2980
    .081                        -.1280
    .085               .1292
    .094      .0092
    .150                                 -.1961   -.2014   -.2299   -.2954
    .157                                                                    -.2507
    .163               .0699
    .177                        -.1405
    .229      .0413
    .246              -.0950
    .250                                 -.1390   -.1765   -.2198   -.2448
    .274                        -.1131
    .345                                                                    -.2229
    .390              -.0867
    .400                                 -.1319   -.1337             -.1717
    .402                        -.0866
    .503                                                                    -.1305
    .550                                 -.1857   -.1728
    .565                        -.8392
    .600                                                             -.0759
    .637              -.1875
    .650                                                    -.0549
    .670                                                                    -.1460
    .700                                          -.0413
    .725                                 -.0142
    .750                                                     .2160    .0893
    .763                         .0029
```

REPRODUCIBILITY OF THE
ORIGINAL PAGE IS POOR

```
                         AMES 11-073(OA148) -140A/B/C/R ORB LEFT WING BOT               (XEBL31)
ALPHA ( 2) =     .000    BETA  ( 2) =     .184
 SECTION ( 1)LEFT WING BOT SURF                DEPENDENT VARIABLE CP
2Y/BW      .2930   .3640   .4270   .5340   .6730   .7800   .8870   .9720
  X/CW
   .775                            .2939   .1687
   .798            .0291
   .808                    .1592
   .834   -.0470
   .939            .0633
   .850                           -.1201  -.2130  -.1952
   .857                   -.1143
   .862
   .865    .1438                                                  -.4244
   .879           -.1737
   .900   -.1927                  -.3109                  -.4058
   .905                   -.3256
   .919           -.3311
   .950                           -.2783  -.2281  -.2155
   .953                   -.1998
   .955           -.1959
   .985   -.1599
  1.000                   -.0791          -.0708          -.0133
ALPHA ( 2) =    -.010    BETA  ( 3) =    4.247  MACH   =  .89780    Q     =  598.63    P     =  1060.9    RN/L   =  3.5706
 SECTION ( 1)LEFT WING BOT SURF                DEPENDENT VARIABLE CP
2Y/BW      .2990   .3540   .4270   .5340   .6730   .7800   .8870   .9720
  X/CW
   .010   -.0079   .0841   .2247  -.2961  -.5039  -.5687  -.5209
   .020    .0000   .1029   .1640  -.3581  -.4165  -.4901  -.5997  -.2678
   .040            .1199   .0186
   [illegible]     .0099                  -.2538  -.3557  -.4059  -.4579
   [illegible]
   [illegible]                                                    -.2905
   [illegible]                    -.2113
   [illegible]                    -.0688
   [illegible]     .1425
   [illegible]     .0104
   .150
   [illegible]                   -.1492  -.1738  -.2054  -.2969
   [illegible]                                                    -.2382
   [illegible]     .1039
   [illegible]                   -.1005
   [illegible]     .0465
   [illegible]    -.0593
   [illegible]                   -.1195  -.1660  -.1931  -.2465
   [illegible]            -.0941
   [illegible]
   [illegible]    -.0677                                          -.2198
```

```
                                      AMES 11-073(OA148) -140A/B/C/R ORB LEFT WING BOT              (XE8L31)

ALPHA ( 2) =    -.010    BETA  ( 3) =    4.247

 SECTION ( 1)LEFT WING BOT SURF                 DEPENDENT VARIABLE CP

2Y/BW        .2990   .3640   .4270   .5340   .6730   .7800   .8870   .9720

  X/CW
    .400                             -.1223  -.1404          -.1777
    .402                     -.0933
    .503                                                             -.1355
    .550                             -.1917  -.1660
    .565                     -.8575
    .600                                                     -.0774
    .637             -.1911
    .650                                             -.0547
    .670                                                             -.1614
    .700                                     -.0408
    .725                             -.0275
    .750                                              .2178   .0898
    .760                     -.0100
    .775                              .2928   .1623
    .798              .0122
    .808                      .1427
    .834     -.0554
    .837              .0444
    .850                             -.1237  -.2742  -.1950
    .857                     -.1097
    .862                                                             -.4917
     865      .1087
    .873             -.1602
    .900     -.1627                  -.3208                  -.4043
    .905                     -.3135
    .919             -.2977
    .950                             -.4219  -.3335  -.4135
    .953                     -.2912
    .955             -.2535
    .965     -.1830
   1.000                     -.1509          -.1449          -.1176
 ALPHA ( 3) =    3.984    BETA  ( 1) =   -3.872   MACH   =   .89870      Q      =   599.00      P      =   1059.5      RN/L    =   3.5709

 SECTION ( 1)LEFT WING BOT SURF                 DEPENDENT VARIABLE CP

2Y/BW        .2990   .3640   .4270   .5340   .6730   .7800   .8870   .9720

  X/CW
    .010      .0142   .1142   .3972   .1219   .0434    1425   .1714
    .020      .0030    1609   .3421  -.0086   .0200    0197   .0143  -.0951
    .040              .1885   .1632
    .050      .0535                  -.0215  -.0371  -.0136  -.0271
    .069                                                             -.1363
    .080                             -.0213
```

DATE 10 FEB 75 TABULATED PRESSURE DATA - OA148 (AMES 11-073-1) (XEBL31)

AMES 11-073(OA148) -140A/B/C/R ORB LEFT WING BOT

ALPHA (3) = 3.984 BETA (1) = -3.872

SECTION (1)LEFT WING BOT SURF DEPENDENT VARIABLE CP

2Y/BW	.2990	.3040	.4270	.5340	.6730	.7800	.8870	.9720
X/CW								
.081			0689					
.086		.2242						
.094	.0567							
.150				.0100	.0043	.0048	-.0466	
.157								-.1709
.163		.1949						
.177			.0323					
[illegible]	.1004							
[illegible]		.0377						
.260				.0212	-.0042	-.0277	-.0663	
.274			.0353					
.345								-.1380
.390		.0355						
.400				.0023	-.0026		-.0582	
.402			.0308					
.503								-.1104
.550				-.0730	-.0703			
.565			-.9092					
.600							-.0525	
.637		-.0801						
.650						-.0307		
.670								-.0681
.700					.0003			
.725				.0306				
.750						.2509	.1326	
.760			.0356					
.775				.3607	.2152			
.798		.0705						
.800			.1879					
.834	-.0022							
[illegible]		.0903						
.840				-.0927	-.2203	-.1657		
[illegible]			-.0862					
[illegible]								-.3508
[illegible]	.2051							
[illegible]		-.1479						
.900	-.1688			-.2420			-.3771	
[illegible]			-.2750					
.913		-.2342						
.950				-.1510	-.1415	-.3219		
.953			-.1340					
.955		-.1391						
.965	-.1159							
1.000			.0363		.0512		-.3981	

AMES 11-073(OA148) -140A/B/C/R ORB LEFT WING BOT (XEBL31)

ALPHA (3) = 3.983 BETA (2) = .184 MACH = .99870 Q = 599.00 P = 1059.5 RN/L = 3.5709

SECTION (1)LEFT WING BOT SURF DEPENDENT VARIABLE CP

2Y/BW	.2930	.3540	.4270	.5340	.6730	.7800	.8870	.9720
X/CW								
.010	-.0842	-.0059	.3650	.1823	.1017	.1709	.1736	
.020	.0000	.0912	.3444	.0640	.0629	.0592	.0334	-.2154
.040		.1337	.2134					
.050	.0240			.0282	-.0005	-.0063	-.0161	
.069								-.2261
.080				.0094				
.081			.1031					
.085		.2111						
.094	.0392							
.150				.0174	.0102	.0056	-.0646	
.157								-.2099
.163		.2111						
.177			.0483					
.229	.0873							
.246		.0585						
.250				.0182	-.0126	-.0293	-.0885	
.274			.0371					
.345								-.1958
.390		.0381						
.400				-.0102	-.0104		-.0729	
.402			.0241					
.503								-.1443
.550				-.0642	-.0809			
.565			-.9301					
.600							-.0662	
.637		-.0916						
.650						-.0442		
.670								-.1206
.700					.0005			
.725				.0140				
.750						.2305	.1100	
.763			.0360					
.775				.3469	.2055			
.798		.0625						
.808			.1829					
.834	-.0163							
.839		.0837						
.850				-.1001	-.2237	-.1809		
.857			-.0920					
.862								-.4324
.875	.1750							
.879		-.1495						
.900	-.1595			-.2779			-.3885	
.905			-.2990					
.919		-.3029						

```
                                   AMES 11-073(OA148) -140A/B/C/R ORB LEFT WING BOT             (XEBL31)

ALPHA ( 3) =     3.983    BETA  ( 2) =      .184

 SECTION ( 1)LEFT WING BOT SURF              DEPENDENT VARIABLE CP

2Y/BW        .2990   .3640   .4270   .5340   .6730   .7800   .8870   .9720

  X/CW
   .950                              -.2289  -.2099  -.2894
   .953                      -.1996
   .955              -.1911
   .965      -.1488
  1.000                      -.0639          -.0615          -.4051

ALPHA ( 3) =     3.979    BETA  ( 3) =     4.243   MACH   =  .89870     Q      =  599.00     P      =  1059.5     RN/L   =  3.5709

 SECTION ( 1)LEFT WING BOT SURF              DEPENDENT VARIABLE CP

2Y/BW        .2990   .3640   .4270   .5340   .6730   .7800   .8870   .9720

  X/CW
   .010      -.2169  -.1578   .2961   .2475   .1548   .2099   .2029
   .020       .0000  -.0147   .3208   .1367   .1162   .1117   .0909  -.3545
   .040               .0405   .2343
   .050      -.0337                   .0884   .0370   .0327   .0176
   .069                                                               -.3126
   .080                               .0552
   .081                       .1305
   .086               .1709
   .094       .0032
   .150                               .0355   .0267   .0147  -.0572
   .157                                                               -.2550
   .163               .2137
   .177                       0669
   .203       .0713
   .246               .0740
   .250                               .0214  -.0053  -.0237  -.0904
   .274                       .0432
   .345                                                               -.2394
   .390               .0477
   .400                              -.0094  -.0152          -.0897
   .412                       .0202
   .513                                                               -.1900
   .540                              -.0834  -.0800
   .565                      -.9345
   .570                                                      -.0785
   .577              -.0595
   .600                                              -.0424
   .670                                                               -.1671
   .700                                      -.0126
   .725                               .0069
   .750                                               .2264   .0885
   .763                       .0287
```

```
DATE 10 FEB 76            TABULATED PRESSURE DATA - OA148 ( AMES 11-073-1 )
                                AMES 11-073(OA148) -140A/B/C/R ORB LEFT WING BOT                (XE8L31)

ALPHA ( 3) =    3.979    BETA  ( 3) =    4.243

 SECTION ( 1)LEFT WING BOT SURF              DEPENDENT VARIABLE CP

2Y/BW        .2990   .3640   .4270   .5340   .6730   .7800   .8870   .9720

  X/CW
   .775                              .3398   .1865
   .798              .0476
   .808                      .1597
   .834     -.0195
   .839              .0678
   .850                             -.1021  -.2267  -.1861
   .857                     -.0876
   .862                                                             -.5178
   .865      .1536
   .879             -.1282
   .900     -.1435                  -.2890                  -.3831
   .905                     -.2728
   .919             -.2536
   .950                             -.3249  -.2777  -.3119
   .953                     -.2645
   .955             -.2151
   .965     -.1499
  1.000                     -.1591          -.1179          -.1361
ALPHA ( 4) =    8.057    BETA  ( 1) =   -3.860   MACH  =  .89807    Q     =  598.57    P     =  1060.2    RN/L   =  3.5677

 SECTION ( 1)LEFT WING BOT SURF              DEPENDENT VARIABLE CP

2Y/BW        .2990   .3640   .4270   .5340   .6730   .7800   .8870   .9720

  X/CW
   .010     -.1761  -.1959   .4070   .5104   .4673   .5253   .4884
   .020      .0000   .0437   .4648   .3895   .4016   .4015   .3838  -.2861
   .040              .1178   .3885
   .050      .0294                   .2844   .2880   .2867   .2775
   .069                                                             -.1894
   .080                              .2294
   .081                      .2739
   .086              .2872
   .094      .0781
   .150                              .1969   .2011   .2062   .1313
   .157                                                             -.1709
   .163              .3325
   .177                      .1976
   .229      .1581
   .246              .1916
   .250                              .1675   .1531   .1373   .0750
   .274                      .1702
   .345                                                             -.0858
   .390              .1599
```

REPRODUCIBILITY OF THE
ORIGINAL PAGE IS POOR

AMES 11-073(OA148) -140A/B/C/R ORB LEFT WING BOT (XE8L31)

ALPHA (4) = 8.057 BETA (1) = -3.860

SECTION (1)LEFT WING BOT SURF DEPENDENT VARIABLE CP

2Y/BW	.2990	.3640	.4270	.5340	.6730	.7900	.8870	.9720
X/CW								
.400				.1149	.1118		.0470	
.402			.1403					
.503								-.0800
.550				.0200	.0229			
.565			-.6449					
.600							.0199	
.637		.0058						
.650						.0478		
.670								-.0609
.700					.0438			
.725				.0647				
.750						.2908	.1591	
.760			.0712					
.775				.3948	.2349			
.798		.0936						
.808			.2182					
.834	.0255							
.839		.1132						
.850				-.0686	-.1931	-.1261		
.857			-.0603					
.862								-.3197
.865	.2321							
.879		-.1295						
.900	-.1496			-.2442			-.3327	
.905			-.2661					
.919		-.2623						
.950				-.2556	-.2573	-.2701		
.953			-.1598					
.955		-.1543						
.985	-.1290							
1.000			.0565		-.1492		-.5743	

ALPHA (4) = 8.064 BETA (2) = .187 MACH = .89807 Q = 598.57 P = 1060.2 RN/L = 3.5677

SECTION (1)LEFT WING BOT SURF DEPENDENT VARIABLE CP

2Y/BW	.2990	.3640	.4270	.5340	.6730	.7800	.8870	.9720
X/CW								
.010	-.3584	-.3995	.2593	.4973	.4454	.4737	.4272	
.020	.3000	-.1023	.3788	.4056	.3906	.3911	.3576	-.4646
.040		-.0086	.3686					
.060	-.0357			.3005	.2856	.2855	.2638	
.069								-.3211
.080				.2449				

AMES 11-073(OA148) -140A/B/C/R ORB LEFT WING BOT (XEBL31)

ALPHA (4) = 8.064 BETA (2) = .187

SECTION (1)LEFT WING BOT SURF DEPENDENT VARIABLE CP

2Y/BW	.2990	.3640	.4270	.5340	.6730	.7800	.8870	.9720
X/CW								
.081			.2792					
.086		.2184						
.094	.0290							
.150				.1981	.1971	.1968	.1142	
.157								-.2102
.163		.3168						
.177			.2045					
.229	.1308							
.246		.1895						
.250				.1565	.1507	.1282	.0574	
.274			.1659					
.345								-.1392
.390		.1656						
.400				.0997	.1046		.0237	
.402			.1251					
.503								-.1305
.550				.0139	.0146			
.565			-.6516					
.600							-.0085	
.637		.0108						
.650						.0316		
.670								-.1051
.700					.0387			
.725				.0587				
.750						.2756	.1471	
.760			.0720					
.775				.3865	.2196			
.798		.0972						
.808			.2093					
.834	.0219							
.839		.1066						
.850				-.0731	-.1940	-.1293		
.857			-.0596					
.862								-.3886
.865	.2111							
.879		-.1103						
.900	-.1451			-.2426			-.3253	
.905			-.2514					
.918		-.2439						
.950				-.2279	-.2520	-.2817		
.953			-.1563					
.955		-.1655						
.965	-.1297							
1.000			.0303		-.1298		-.5967	

AMES 11-073(OA148) -140A/B/C/R ORB LEFT WING BOT (XEBL31)

ALPHA (4) = 8.059 BETA (3) = 4.245 MACH = .89807 Q = 598.57 P = 1060.2 RN/L = 3.5677

SECTION (1)LEFT WING BOT SURF DEPENDENT VARIABLE CP

2Y/BW	.2990	.3640	.4270	.5340	.6730	.7800	.8870	.9720
X/CW								
.010	-.5392	-.3250	.0855	.4556	.4076	.4096	.3577	
.020	.0000	-.1636	.2636	.3912	.3758	.3600	.3235	-.6362
.040		-.0896	.3229					
.050	-.1290			.3042	.2849	.2670	.2426	
.069								-.433
.080				.2454				
.081			.2669					
.086		.1480						
.094	-.0306							
.150				.1899	.1951	.1812	.0985	
.157								-.2605
.163		.2822						
.177			.2064					
.229	.0966							
.246		.1744						
.250				.1530	.1359	.1216	.0347	
.274			.1653					
.345								-.2009
.390		.1551						
.400				.1012	.0885		-.0039	
.402			.1278					
.503								-.1857
.550				.0106	.0080			
.565			-.6813					
.600							-.0326	
.637		-.0027						
.650						.0093		
.670								-.1458
.700					.0208			
.725				.0517				
.750						.2492	.1238	
.760			.0720					
.775				.3524	.1946			
.793		.0878						
.808			.1911					
.934	.0197							
.839		.1039						
.850				-.0783	-.2043	-.1366		
.857			-.0518					
.862								-.4363
.855	.2053							
.879		-.0935						
.900	-.0992			-.2538			-.3135	
.965			-.2296					
.919		-.2094						

```
                                   AMES 11-073(OA148) -140A/B/C/R ORG LEFT WING BOT              (XEBL31)

ALPHA ( 4) =    8.059    BETA  ( 3) =     4.245

 SECTION ( 1)LEFT WING BOT SURF              DEPENDENT VARIABLE CP

2Y/BW        .2990   .3640   .4270   .5340   .6730   .7800   .8870   .9720

  X/CW
   .950                             -.2495  -.2552  -.3170
   .953                     -.2037
   .955             -.1702
   .965    -.1183
  1.000                     -.0520          -.1126          -.6229

ALPHA ( 5) =   11.990    BETA  ( 1) =    -3.854   MACH   =  .89717     Q      =  598.01     P      =  1061.4     RN/L   =  3.5714

 SECTION ( 1)LEFT WING BOT SURF              DEPENDENT VARIABLE CP

2Y/BW        .2990   .3640   .4270   .5340   .6730   .7800   .8870   .9720

  X/CW
   .010    -.4808  -.5630   .1962   .6308   .6095   .5910   .5304
   .020     .0000  -.1388   .4165   .5822   .5769   .5682   .5190  -.4251
   .040            -.0273   .4866
   .050    -.0175                   .4833   .4798   .4739   .4406
   .060                                                             -.2340
   .080                             .4194
   .081                     .4144
   .086             .2825
   .094     .0781
   .150                             .3454   .3549   .3518   .2769
   .157                                                             -.1772
   .163             .4214
   .177                     .3356
   .229     .2081
   .246             .3086
   .250                             .2879   .2872   .2692   .2030
   .274                     .2863
   .345                                                             -.0512
   .390             .2686
   .400                             .2143   .2157           .1405
   .402                     .2381
   .503                                                             -.0608
   .550                             .1123   .1129
   .565                    -.5937
   .600                                                     .0786
   .637             .0896
   .650                                             .1084
   .670                                                             -.0336
   .700                                     .0957
   .725                             .1175
   .750                                             .3205   .1994
   .760                     .1110
```

```
DATE 10 FEB 76          TABULATED PRESSURE DATA - OA148 ( AMES 11-073-1 )
                                  AMES 11-073(OA148) -140A/B/C/R ORB LEFT WING BOT                   (XEBL31)

ALPHA ( 5) =   11.980    BETA  ( 1) =   -3.854

 SECTION ( 1)LEFT WING BOT SURF                DEPENDENT VARIABLE CP

2Y/BW        .2990   .3640   .4270   .5340   .6730   .7800   .8870   .9720

  X/CW
    .775                                 .4324   .2580
    .799                 .1330
    .808                         .2502
    .834         .0596
    .839                 .1382
    .850                                -.0309  -.1489  -.0724
    .857                        -.0240                                  -.2447
    .862
    .865         .2671
    .879                -.0958
    .900        -.1263                  -.2107                  -.2231
    .905                        -.2339
    .919                -.2555
    .950                                -.3189  -.2433  -.2353
    .953                        -.2744
    .955                -.2347
    .965        -.1964
   1.000                        -.0918          -.3870          -.6130
ALPHA ( 5) =   11.990    BETA  ( 2) =     .184  MACH   =  .89717    Q     =  598.01    P     =  1061.4    RN/L  =  3.5714

 SECTION ( 1)LEFT WING BOT SURF                DEPENDENT VARIABLE CP

2Y/BW        .2990   .3640   .4270   .5340   .6730   .7800   .8870   .9720

  X/CW
    .010        -.6955  -.4181  -.0225   .5471   .5298   .4755   .4138  -.6215
    .020         .0000  -.2156   .2526   .5335   .5220   .5060   .4427
    .040                -.1220   .4098
    .050        -.1167                   .4592   .4552   .4378   .3939  -.3914
    .069
    .080                                 .3983
    .081                         .3835
    .086                 .1906
    .094         .0080
    .150                                 .3303   .3420   .3318   .2366  -.2487
    .157
    .163                 .3724
    .177                         .3245
    .229         .1658
    .246                 .2829
    .250                                 .2719   .2690   .2510   .1700
    .274                         .2713                                  -.1332
    .345
    .390                 .2592
```

```
                                   AMES 11-073(OA148) -140A/B/C/R ORB LEFT WING BOT                (XE8L31)

ALPHA ( 5) =    11.990    BETA  ( 2) =      .184

 SECTION ( 1)LEFT WING BOT SURF               DEPENDENT VARIABLE CP

2Y/BW        .2990   .3640   .4270   .5340   .6730   .7800   .8870   .9720

  X/CW
    .400                             .1950   .2003           .1070
    .402                     .2199
    .503                                                             -.1242
    .550                             .1065   .1024
    .565                    -.6075
    .600                                                     .0458
    .637             .0849
    .650                                             .0909
    .670                                                             -.0769
    .700                                     .0879
    .725                             .1093
    .750                                             .2967   .1769
    .760                     .0992
    .775                             .4209   .2415
    .798             .1364
    .808                     .2386
    .844     .0558
    .833             .1388
    .850                            -.0369  -.1602  -.0835
    .857                    -.0241
    .862                                                             -.3013
    .865     .2525
    .879            -.0840
    .900    -.1129                  -.2123                  -.2258
    .905                    -.2260
    .919            -.2352
    .950                            -.2833  -.2614  -.2511
    .953                    -.2523
    .955            -.2297
    .965    -.1833
   1.000                    -.1271          -.3370          -.6450
ALPHA ( 5) =    11.975    BETA  ( 3) =    4.259   MACH   =  .89717     Q     =  598.01     P     =  1061.4     RN/L   =  3.5714

 SECTION ( 1)LEFT WING BOT SURF               DEPENDENT VARIABLE CP

2Y/BW        .2990   .3640   .4270   .5340   .6730   .7800   .8870   .9720

  X/CW
    .010    -.8110  -.3864  -.2249   .4340   .4282   .3481   .2859
    .020     .0000  -.3123   .0841   .4622   .4506   .4253   .3552  -.7595
    .040            -.2309   .3185
    .050    -.2113                   .4181   .4126   .3894   .3367
    .069                                                             -.5014
    .080                             .3630
```

AMES 11-073(OA148) -140A/B/C/R ORB LEFT WING BOT (XEBL31)

ALPHA (5) = 11.975 BETA (3) = 4.259

SECTION (1)LEFT WING BOT SURF DEPENDENT VARIABLE CP

2Y/BW	.2990	.3640	.4270	.5340	.6730	.7800	.8870	.9720
X/CW								
.081			.3398					
.086		.1035						
.094	-.0681							
.150				.2997	.3107	.3048	.2040	
.157								-.3028
.163		.3137						
.177			.3024					
.229	.1120							
.246		.2441						
.250				.2478	.2477	.2269	.1407	
.274			.2514					
.345								-.2045
.390		.2353						
.400				.1766	.1839		.0834	
.402			.2002					
.503								-.1907
.550				.0927	.0879			
.565			-.6044					
.600							.0182	
.637		.0730						
.650						.0682		
.670								-.1308
.700					.0713			
.725				.0984				
.750						.2662	.1457	
.760			.0967					
.775				.3932	.2169			
.798		.1212						
.809			.2242					
.834	.0500							
.843		.1318						
.850				-.0421	-.1675	-.0939		
.857			-.0251					
.862								-.3635
.865	.2476							
.879		-.0650						
.900	-.0895			-.2120			-.2286	
.905			-.2112					
.919		-.2065						
.950				-.2699	-.2457	-.2585		
.953			-.2470					
.955		-.2302						
.965	-.1656							
1.000			-.1851		-.3059		-.6695	

```
DATE 10 FEB 76              TABULATED PRESSURE DATA - OA148 ( AMES 11-073-1 )                                              PAGE 1962

                                        AMES 11-073(OA148) -140A/B/C/R ORB LEFT WING BOT                 (XEBL32)   ( 05 AUG 75  )

              REFERENCE DATA                                                                                   PARAMETRIC DATA

SREF  =  2690.0000 SQ.FT.    XMRP  =  1076.6800 IN. XO                                     RUDDER =   -10.000   SPDBRK =     35.000
LREF  =   474.8000 IN.       YMRP  =      .0000 IN. YO                                     BDFLAP =    16.300   L-ELVN =     10.000
BREF  =   936.0680 IN.       ZMRP  =   375.0000 IN. ZO                                     R-ELVN =      .000   MACH   =       .600
SCALE =      .0300

ALPHA ( 1) =   -4.052    BETA  ( 1) =   -7.850   MACH   =  .59664    Q      =  594.68    P      =  2386.3    RN/L   =  4.8170

 SECTION ( 1)LEFT WING BOT SURF            DEPENDENT VARIABLE CP

2Y/BW        .2990   .3640   .4270   .5340   .6730   .7800   .8870   .9720

  X/CW
    .010    -.2911  -.6183 -1.0164 -2.1099 -2.1175 -1.9221 -1.9931
    .020     .0000  -.5625 -1.0820 -1.9399 -2.0039 -1.5024 -1.8419  -.7367
    .040            -.5027  -.9265
    .050    -.2351                  -.9112  -.9314 -1.0307  -.9304
    .069                                                            -.6209
    .080                            -.6716
    .081                    -.5841
    .086            -.3229
    .094    -.2153
    .150                            -.4064  -.4193  -.4514  -.4038
    .157                                                            -.2761
    .163            -.3619
    .177                    -.3547
    .229    -.1743
    .246            -.3513
    .250                            -.2613  -.2862  -.3016  -.2830
    .274                    -.2427
    .345                                                            -.2281
    .390            -.2118
    .400                            -.1633  -.1608          -.1667
    .402                    -.1477
    .503                                                            -.1833
    .550                            -.1357  -.1276
    .565                    -.2049
    .600                                                    -.0878
    .637            -.1585
    .650                                            -.0537
[illegible]                                                         -.1250
    .700                                    -.0560
[illegible]                         -.0242
    .750                                             .1136   .0193
    .760                    -.0218
[illegible]                          .1524   .0932
[illegible]          .0129
[illegible]                  .0667
    .934    -.0508
[illegible]         -.0027
[illegible]                         -.0539  -.0920  -.0819
```

```
DATE 10 FEB 76              TABULATED PRESSURE DATA - OA148 ( AMES 11-073-1 )                                                          PAGE 1963

                                             AMES 11-073(OA148) -140A/B/C/R ORB LEFT WING BOT                    (XEBL32)

ALPHA ( 1) =    -4.052    BETA  ( 1) =    -7.850

 SECTION ( 1)LEFT WING BOT SURF              DEPENDENT VARIABLE CP

2Y/BW        .2990    .3640    .4270    .5340    .6730    .7800    .8870    .9720

  X/CW
    .857                      -.0674
    .862                                                                  -.1362
    .865     .0467
    .879              -.1123
    .900    -.1335                     -.0981                    -.0833
    .905                      -.1116
    .919              -.1184
    .950                               -.0475   -.0383   -.0429
    .953                      -.0532
    .955              -.0894
    .955    -.0830
   1.000                       .0549             .0222             .0666

ALPHA ( 1) =    -4.036    BETA  ( 2) =    -3.835   MACH   =  .59664     Q      =  594.68     P      -   2386.3     RN/L   =  4.8170

 SECTION ( 1)LEFT WING BOT SURF              DEPENDENT VARIABLE CP

2Y/BW        .2990    .3640    .4270    .5340    .6730    .7800    .8870    .9720

  X/CW
    .010    -.1839   -.4125   -.7707 -1.9732 -2.0026 -2.1255 -1.9299
    .020     .0000   -.3611   -.8185 -1.5754 -1.7818 -1.6495 -1.7493  -.6557
    .040             -.3351   -.7275
    .050    -.1650                     -.8329   -.8748   -.9223   -.8669
    .069                                                                  -.5085
    .080                               -.6171
    .081                      -.5026
    .085             -.2169
    .094    -.1550
    .150                               -.3734   -.3999   -.3991   -.3915
    .157                                                                  -.2611
    .163             -.2688
    .177                      -.3162
    .229    -.1188
    .246             -.2993
    .250                               -.2441   -.2741   -.2825   -.2668
    .274                      -.2236
    .345                                                                  -.2007
    .390             -.1999
    .400                               -.1565   -.1553            -.1517
    .402                      -.1411
    .503                                                                  -.1641
    .510                               -.1403   -.1254
    .550                      -.1737
    .600                                                          -.0828
```

```
                    AMES 11-073(OA148) -140A/B/C/R ORB LEFT WING BOT          (XEBL32)

ALPHA ( 1) =   -4.036    BETA  ( 2) =   -3.835

 SECTION ( 1)LEFT WING BOT SURF            DEPENDENT VARIABLE CP

2Y/BW          .2930     .3540     .4270     .5340     .6730     .7800     .8870     .9720

  X/CW
    .637                -.1494
    .650                                                        -.0497
    .670                                                                            -.1199
    .700                                              -.0535
    .725                                    -.0228
    .750                                                         .1153     .0246
    .760                          -.0203
    .775                                     .1708     .0888
    .798                 .0084
    .808                           .0783
    .934      -.0416
    .839                -.0054
    .850                                    -.0659    -.1085    -.0898
    .857                          -.0663
    .862                                                                            -.1293
    .865       .0607
    .879                -.1070
    .900      -.1243                        -.1068                        -.0897
    .905                          -.1167
    .919                -.1221
    .950                                    -.0577    -.0502    -.0509
    .953                          -.0611
    .955                -.0987
    .965      -.0722
   1.000                           .0529               .0208               .0597
ALPHA ( 1) =   -4.020    BETA  ( 3) =      .192   MACH   =  .59664    Q     =  594.68    P     =  2325.3    RN/L   =  4.3170

 SECTION ( 1)LEFT WING BOT SURF            DEPENDENT VARIABLE CP

2Y/BW          .2930     .3540     .4270     .5340     .6730     .7800     .8870     .9720

  X/CW
    .010      -.0942    -.2120    -.5128   -1.6602   -1.7276   -2.0632   -1.8106
    .020       .0000    -.1872    -.5820   -1.2868   -1.4200   -1.5001   -1.6345    -.5923
    .040                -.1704    -.5452
    .050      -.1000                        -.7197    -.7787    -.8344    -.8280
    .069                                                                            -.4251
    .080                                    -.5432
    .081                          -.4065
    .086                -.1170
    .094      -.0934
    .150                                    -.3 56    -.3557    -.3703    -.3656
    .157                                                                            -.2417
    .163                -.1803
```

AMES 11-073(OA148) -140A/B/C/R ORB LEFT WING BOT (XE8L32)

ALPHA (1) = -4.020 BETA (3) = .192

SECTION (1)LEFT WING BOT SURF DEPENDENT VARIABLE CP

2Y/BW	.2990	.3640	.4270	.5340	.6730	.7800	.8870	.9720
X/CW								
.177			-.2793					
.229	-.0737							
.246		-.2516						
.250				-.2151	-.2531	-.2597	-.2474	
.274			-.1959					
.345								-.1731
.390		-.1718						
.400				-.1448	-.1431		-.1424	
.402			-.1358					
.503								-.1448
.550				-.1289	-.1170			
.565			-.1802					
.600							-.0711	
.637		-.1409						
.650						-.0444		
.670								-.1086
.700					-.0466			
.725				-.0219				
.750						.1245	.0350	
.760			-.0079					
.775				.1889	.0356			
.798		.0107						
.808			.0800					
.834	-.0447							
.839		-.0012						
.850				-.0685	-.1224	-.0952		
.857			-.0711					
.862								-.1219
.855	.0777							
.879		-.1005						
.900	-.1171			-.1120			-.0969	
.905			-.1198					
.919		-.1227						
.950				-.0663	-.0640	-.0622		
.953			-.0683					
.955		-.1031						
.965	-.0746							
1.000			.0462		.0240		.0419	

AMES 11-073(OA148) -140A/B/C/R ORB LEFT WING BOT (XEBL32)

ALPHA (1) = -4.028 BETA (4) = 4.273 MACH = .59664 Q = 594.68 P = 2386.3 RN/L = 4.8170

SECTION (1)LEFT WING BOT SURF DEPENDENT VARIABLE CP

2Y/BW	.2930	.3640	.4270	.5340	.6730	.7800	.8870	.9720
X/CW								
.010	-.0429	-.0870	-.3142	-1.3293	-1.4326	-1.7201	-1.4881	
.020	.0000	-.0811	-.3755	-1.0716	-1.1323	-1.1998	-1.3883	-.4385
.040		-.0591	-.3926					
.050	-.0550			-.6048	-.6670	-.7283	-.7299	
.069								-.3155
.080				-.4619				
.091			-.3239					
.066		-.0454						
.094	-.0473							
.150				-.2941	-.3117	-.3232	-.3288	
.157								-.2166
.163		-.1135						
.177			-.2341					
.229	-.0326							
.246		-.2025						
.250				-.1940	-.2235	-.2309	-.2256	
.274			-.1700					
.345								-.1422
.330		-.1472						
.400				-.1348	-.1299		-.1269	
.402			-.1270					
.503								-.1199
.550				-.1190	-.1090			
.565			-.1835					
.600							-.0645	
.637		-.1314						
.650						-.0381		
.670								-.0966
.700					-.0401			
.725				-.0173				
.750						.1309	.0372	
.760			-.0163					
.775				.2046	.0340			
.798		.0085						
.808			.0731					
.834	-.0405							
.839		.0097						
.850				-.0684	-.1264	-.0959		
.857			-.0666					
.862								-.1210
.865	.0560							
.879		-.0842						
.900	-.1026			-.1168			-.1039	
.905			-.1172					
.919		-.1180						

```
                              AMES 11-073(OA148) -140//B/C/R ORB LEFT WING BOT            (XEBL32)

ALPHA ( 1) =   -4.028    BETA  ( 4) =    4.273

 SECTION ( 1)LEFT WING BOT SURF              DEPENDENT VARIABLE CP

2Y/BW          .2930   .3640   .4270   .5340   .6730   .7800   .8870   .9720

  X/CW
   .950                                -.0712  -.0631  -.0726
   .953                        -.0723
   .955                -.0932
   .955        -.0739
  1.000                         .0415           .0275           .0252

ALPHA ( 1) =   -4.045    BETA  ( 5) =    8.346   MACH   =  .59664     Q      =  594.68     P      =  2386.3     RN/L   =  4.8170

 SECTION ( 1)LEFT WING BOT SURF              DEPENDENT VARIABLE CP

2Y/BW          .2930   .3640   .4270   .5340   .6730   .7800   .8870   .9720

  X/CW
   .010        -.0153   .0156  -.1097  -.9659 -1.1595 -1.3886 -1.2531
   .020         .0000   .0177  -.1626  -.7980  -.8511  -.9655 -1.1148  -.3330
   .040                 .0272  -.2413
   .050        -.0276                  -.4694  -.5536  -.6141  -.6234
   .059                                                                -.2547
   .080                                -.3679
   .081                        -.2329
   .086                 .0224
   .094        -.0297
   .150                                -.2396  -.2641  -.2779  -.2911
   .157                                                                -.2017
   .163                -.0410
   .177                        -.1885
   .229        -.0154
   .246                -.1482
   .250                                -.1717  -.1947  -.2056  -.1989
   .274                        -.1465
   .345                                                                -.1135
   .390                -.1222
   .400                                -.1211  -.1136          -.1109
   .402                        -.1106
   .503                                                                -.1010
   .550                                -.1093  -.0988
   .565                        -.2220
   .600                                                        -.0557
[illegible]            -.1198
[illegible]                                            -.0346
[illegible]                                                            -.0916
[illegible]                                    -.0362
[illegible]                            -.0129
[illegible]                                             .1332   .0420
   .760                        -.0004
```

```
                                 AMES 11-073(OA148) -140A/B/C/R ORB LEFT WING BOT           (XEBL32)

ALPHA ( 1) =    -4.045    BETA  ( 5) =    8.346

 SECTION ( 1)LEFT WING BOT SURF              DEPENDENT VARIABLE CP

2Y/BW        .2990    .3640    .4270    .5340    .6730    .7800    .8870    .9720

  X/CW
   .775                                  .2121    .0901
   .798               .0163
   .808                        .0748
   .834    -.0325
   .839               .0107
   .850                                 -.0661   -.1225   -.0865
   .857                       -.0508
   .862                                                                    -.1139
   .865     .0872
   .879              -.0784
   .900    -.0764                       -.1100                     -.1014
   .905                       -.0931
   .919              -.1071
   .950                                 -.0656   -.0628   -.0749
   .953                       -.0608
   .955              -.0899
   .965    -.0546
  1.000                        .0314              .0231              .0245

ALPHA ( 2) =      .034    BETA  ( 1) =    -7.883    MACH    =  .59622     Q      =  593.85     P      =  2386.3     RN/L    =  4.8132

 SECTION ( 1)LEFT WING BOT SURF              DEPENDENT VARIABLE CP

2Y/BW        .2990    .3640    .4270    .5340    .6730    .7800    .8870    .9720

  X/CW
   .010     .0028   -.0086   -.1035   -.8070   -.7934   -.6817   -.4958
   .020     .0000   -.0521   -.2297   -.7389   -.6193   -.6194   -.5881   -.0938
   .040             -.0436   -.3309
   .050    -.0385                       -.4584   -.4164   -.4253   -.3855
   .069                                                                    -.0993
   .080                                 -.3386
   .081                       -.2621
   .086              -.0228
   .094    -.0515
   .150                                 -.1914   -.1834   -.1662   -.1660
   .157                                                                    -.1465
   .163              -.0973
   .177                       -.1695
   .229    -.0394
   .246              -.1681
   .250                                 -.1178   -.1267   -.1248   -.1178
   .274                       -.1116
   .345                                                                    -.0738
   .393              -.0945
```

AMES 11-073(OA148) -140A/B/C/R ORB LEFT WING BOT (XE8L32)

ALPHA (2) = .034 BETA (1) = -7.883

SECTION (1)LEFT WING BOT SURF DEPENDENT VARIABLE CP

2Y/BW	.2990	.3640	.4270	.5340	.6730	.7800	.8870	.9720
X/CW								
.400				-.0721	-.0656		-.0692	
.402			-.0614					
.503								-.0787
.550				-.0756	-.0640			
.565			-.2514					
.600							-.0304	
.637		-.1078						
.650						-.0040		
.670								-.0693
.700					-.0144			
.725				.0149				
.750						.1762	.0624	
.760			.0098					
.775				.2224	.1368			
.798		.0394						
.808			.1065					
.834	-.0235							
.839		.0247						
.850				-.0435	-.0956	-.0732		
.857			-.0459					
.862								-.1527
.865	.1034							
.879		-.0873						
.900	-.1098			-.0863			-.0912	
.905			-.1047					
.919		-.1067						
.950				-.0470	-.0288	-.0410		
.953			-.0452					
.955		-.0854						
.965	-.0672							
1.000			.0653		.0292		.0415	

ALPHA (2) = .043 BETA (2) = -3.857 MACH = .59622 Q = 593.85 P = 2386.3 RN/L = 4.8132

SECTION (1)LEFT WING BOT SURF DEPENDENT VARIABLE CP

2Y/BW	.2990	.3640	.4270	.5340	.6730	.7800	.8870	.9720
X/CW								
.010	.0216	.0483	.0096	-.6242	-.6647	-.5656	-.4035	
.020	.0000	.0216	-.0962	-.6090	-.5154	-.5085	-.5094	-.0947
.040		.0318	-.2120					
.050	-.0147			-.3700	-.3742	-.3637	-.3401	
.069								-.0911
.080				-.2862				

```
DATE 10 FEB 76            TABULATED PRESSURE DATA - OA148 ( AMES 11-073-1 )

                            AMES 11-073(OA148) -140A/B/C/R ORB LEFT WING BOT          (XEBL32)

ALPHA ( 2) =      .043   BETA  ( 2) =   -3.857

 SECTION ( 1)LEFT WING BOT SURF           DEPENDENT VARIABLE CP

2Y/BW      .2990   .3640   .4270   .5340   .6730   .7800   .8870   .9720

 X/CW
  .081                    -.2053
  .086             .0327
  .094    -.0277
  .150                            -.1708  -.1595  -.1494  -.1613
  .157                                                            -.1513
  .163            -.0439
  .177                    -.1402
  .229    -.0122
  .246            -.1326
  .250                            -.1022  -.1192  -.1210  -.1174
  .274                    -.0981
  .345                                                            -.0849
  .390            -.0827
  .400                            -.0722  -.0608          -.0626
  .402                    -.0560
  .503                                                            -.0868
  .550                            -.0771  -.0645
  .565                    -.2137
  .600                                                    -.0387
  .637            -.1016
  .650                                            -.0084
  .670                                                            -.0896
  .700                                    -.0165
  .725                             .0084
  .750                                             .1736   .0586
  .760                     .0096
  .775                             .2305   .1280
  .798             .0407
  .808                     .1063
  .834    -.0151
  .839             .0243
  .850                            -.0506  -.1126  -.0800
  .857                    -.0494
  .862                                                            -.1660
  .865     .1155
  .879            -.0927
  .900    -.1060                  -.0980                  -.0975
  .905                    -.1088
  .919            -.1142
  .950                            -.0587  -.0341   .0569
  .953                    -.0606
  .955            -.0918
  .965    -.0616
 1.000                     .0540           .0248           .0398
```

REPRODUCIBILITY OF THE ORIGINAL PAGE IS POOR

DATE 10 FEB 76 TABULATED PRESSURE DATA - OA148 (AMES 11-073-1)

AMES 11-073(OA148) -140A/B/C/R ORB LEFT WING BOT (XEBL32)

ALPHA (2) = .045 BETA (3) = .186 MACH = .59622 Q = 593.85 P = 2386.3 RN/L = 4.8132

SECTION (1)LEFT WING BOT SURF DEPENDENT VARIABLE CP

2Y/BW	.2990	.3640	.4270	.5340	.6730	.7800	.8870	.9720
X/CW								
.010	.0078	.0691	.1103	-.4497	-.5069	-.4605	-.3545	
.020	.0000	.0665	.0200	-.4647	-.4036	-.4365	-.4355	-.1162
.040		.0710	-.1152					
.050	-.0025			-.2890	-.3049	-.3193	-.3051	
.069								-.1255
.080				-.2293				
.081			-.1446					
.086		.0743						
.094	-.0114							
.150				-.1433	-.1446	-.1401	-.1610	
.157								-.1605
.163		.0072						
.177			-.1206					
.229	.0021							
.246		-.1025						
.250				-.0906	-.1100	-.1205	-.1148	
.274			-.0826					
.345								-.0941
.390		-.0582						
.400				-.0680	-.0624		-.0705	
.402			-.0546					
.503								-.0965
.550				-.0794	-.0704			
.565			-.2017					
.600							-.0447	
.637		-.0969						
.650						-.0108		
.670								-.1080
.700					-.0191			
.725				.0035				
.750						.1619	.0529	
.760			.0058					
.775				.2312	.1189			
.788		.0353						
.800			.1027					
.834	-.0225							
.839		.0243						
.850				-.0606	-.1258	-.0898		
.857			-.0560					
.862								-.1704
.865	.1081							
.879		-.0911						
.900	-.1015			-.1125			-.1065	
.905			-.1164					
.919		-.1229						

AMES 11-073(OA148) -140A/B/C/R ORB LEFT WING BOT (XEBL32)

ALPHA (2) = .045 BETA (3) = .186

SECTION (1)LEFT WING BOT SURF DEPENDENT VARIABLE CP

2Y/BW	.2990	.3640	.4270	.5340	.6730	.7800	.8870	.9720
X/CW								
.950				-.0718	-.0671	-.0671		
.953			-.0755					
.955		-.1043						
.955	-.0742							
1.000			.0343		.0207		.0378	

ALPHA (2) = .041 BETA (4) = 4.251 MACH = .59622 Q = 593.85 P = 2386.3 RN/L = 4.8132

SECTION (1)LEFT WING BOT SURF DEPENDENT VARIABLE CP

2Y/BW	.2990	.3640	.4270	.5340	.6730	.7800	.8870	.9720
X/CW								
.010	-.0301	.0412	.1647	-.2823	-.3666	-.2889	-.2066	
.020	.0000	.0585	.1013	-.3293	-.2975	-.3116	-.3015	-.1297
.040		.0762	-.0315					
.050	-.0124			-.2111	-.2257	-.2416	-.2288	
.069								-.1503
.080				-.1757				
.081			-.0852					
.086		.0913						
.094	-.0099							
.150				-.1199	-.1130	-.1073	-.1351	
.157								-.1678
.163		.0445						
.177			-.0826					
.229	.0093							
.246		-.0745						
.250				-.0821	-.0948	-.0967	-.1060	
.274			-.0681					
.345								-.1087
.390		-.0568						
.400				-.0626	-.0550		-.0643	
.402			-.0532					
.503								-.1152
.550				-.0712	-.0656			
.565			-.2318					
.600							-.0446	
.637		-.0913						
.650						-.0146		
.670								-.1309
.700					-.0190			
.725				.0037				
.750						.1545	.0483	
.760			.0065					

```
                                  AMES 11-073(OA148) -140A/B/C/R ORB LEFT WING BOT                (XEBL32)

ALPHA ( 2) =      .041    BETA  ( 4) =    4.251

 SECTION ( 1)LEFT WING BOT SURF           DEPENDENT VARIABLE CP

2Y/BW        .2990     .3640     .4270     .5340     .6730     .7800     .8870     .9720

  X/CW
    .775                                  .2328     .1082
    .798               .0334
    .808                         .1010
    .834    -.0164
    .839               .0209
    .850                                 -.0622    -.1318    -.0889
    .857                        -.0529
    .862                                                                        -.1874
    .865     .0940
    .879              -.0828
    .900    -.0871                       -.1147                        -.1138
    .905                        -.1102
    .919              -.1132
    .950                                 -.0824    -.0800    -.0832
    .953                        -.0788
    .955              -.1017
    .965    -.0747
   1.000                         .0150               .0090               .0329
ALPHA ( 2) =      .035    BETA  ( 5) =    8.312   MACH   =  .59622    Q      =  593.85    P     =  2386.3    RN/L   =  4.8132

 SECTION ( 1)LEFT WING BOT SURF           DEPENDENT VARIABLE CP

2Y/BW        .2990     .3640     .4270     .5340     .6730     .7800     .8870     .9720

  X/CW
    .010    -.1110    -.0374     .1956    -.1127    -.2276    -.1684    -.1337
    .020     .0000     .0084     .1638    -.1805    -.1922    -.2175    -.2117    -.1795
    .040               .0375     .0505
    .050    -.0459                       -.1297    -.1568    -.1875    -.1912
    .059                                                                        -.1916
    .080                                 -.1224
    .081                        -.0334
    .086               .0913
    .094    -.0306
    .150                                 -.0861    -.0881    -.0902    -.1231
    .157                                                                        -.1991
    .163               .0743
    .177                        -.0526
    .223     .0050
    .246              -.0485
    .250                                 -.0679    -.0745    -.0878    -.1001
    .274                        -.0493
    .345                                                                        -.1423
    .390              -.0412
```

AMES 11-073(OA148) -140A/B/C/R ORB LEFT WING BOT (XE8L32)

ALPHA (2) = .035 BETA (5) = 8.312

SECTION (1)LEFT WING BOT SURF DEPENDENT VARIABLE CP

2Y/BW	.2990	.3640	.4270	.5340	.6730	.7800	.8870	.9720
X/CW								
.400				-.0539	-.0486		-.0691	
.402			-.0448					
.503								-.1401
.550				-.0657	-.0622			
.565			-.2602					
.600							-.0499	
.637		-.0882						
.650						-.0156		
.670								-.1470
.700					-.0170			
.725				.0068				
.750						.1425	.0443	
.760			.0096					
.775				.2271	.0988			
.798		.0332						
.808			.0928					
.834	-.0164							
.839		.0239						
.850				-.0612	-.1345	-.0930		
.857			-.0464					
.862								-.1968
.865	.1027							
.879		-.0707						
.900	-.0674			-.1137			-.1167	
.905			-.1032					
.919		-.1072						
.950				-.0840	-.0792	-.0902		
.953			-.0811					
.955		-.0947						
.965	-.0617							
1.000			.0001		-.0001		.0120	

ALPHA (3) = 4.014 BETA (1) = -7.879 MACH = .59602 Q = 593.50 P = 2386.4 RN/L = 4.8147

SECTION (1)LEFT WING BOT SURF DEPENDENT VARIABLE CP

2Y/BW	.2990	.3640	.4270	.5340	.6730	.7800	.8870	.9720
X/CW								
.010	.0816	.1446	.3468	.0643	.1209	.2625	.3287	
.020	.0000	.1547	.2569	-.0416	.0664	.1037	.1748	-.0117
.040		.1682	.0727					
.050	.0687			-.0484	.0003	.0443	.0916	
.060								-.0091
.080				-.0343				

AMES 11-073(OA148) -140A/B/C/R ORB LEFT WING BOT (XE8L32)

ALPHA (3) = 4.014 BETA (1) = -7.879

SECTION (1)LEFT WING BOT SURF DEPENDENT VARIABLE CP

2Y/BW	.2990	.3640	.4270	.5340	.6730	.7800	.8870	.9720
X/CW								
.081			.0078					
.086		.1743						
.094	.0570							
.150				-.0014	.0298	.0547	.0374	
.157								-.1087
.163		.1077						
.177			.0092					
.229	.0631							
.246		-.0017						
.250				.0234	.0201	.0273	.0208	
.274			.0175					
.345								-.0209
.390		.0169						
.400				.0188	.0331		.0279	
.402			.0284					
.503								-.0452
.550				-.0123	-.0004			
.565			-.2958					
.600							.0135	
.637		-.0426						
.650						.0440		
.670								-.0573
.700					.0213			
.725				.0467				
.750						.2056	.0969	
.760			.0389					
.775				.2704	.1655			
.798		.0695						
.808			.1342					
.834	.0083							
.849		.0475						
.850				-.0290	-.0883	-.0598		
.857			-.0200					
.862								-.1955
.855	.1464							
.873		-.0673						
.900	-.0961			-.0833			-.1053	
.905			-.0840					
.919		-.0935						
.950				-.0468	-.0329	-.0544		
.953			-.0426					
.955		-.0763						
.965	-.0472							
1.000			.0608		.0180		-.0292	

AMES 11-073(OA148) -140A/B/C/R ORB LEFT WING BOT (XE8L32)

ALPHA (3) = 4.016 BETA (2) = -3.855 MACH = .59602 Q = 593.50 P = 2386.4 RN/L = 4.8147

SECTION (1)LEFT WING BOT SURF DEPENDENT VARIABLE CP

2Y/BW	.2990	.3640	.4270	.5340	.6730	.7800	.8870	.9720
X/CW								
.010	.0129	.0609	.3402	.1531	.1571	.2958	.3310	
.020	.0000	.1116	.2903	.0237	.1023	.1523	.1962	-.1264
.040		.1440	.1371					
.050	.0468			.0169	.0363	.0709	.0999	
.059								-.0991
.080				-.0004				
.081			.0426					
.086		.1743						
.094	.0429							
.150				.0148	.0341	.0633	.0304	
.157								-.1473
.163		.1373						
.177			.0245					
.229	.0667							
.245		.0157						
.250				.0294	.0218	.0274	.0093	
.274			.0231					
.345								-.0683
.390		.0259						
.400				.0223	.0331		.0121	
.402			.0252					
.503								-.0866
.550				-.0138	-.0032			
.565			-.2584					
.600							.0012	
.637		-.0432						
.650						.0330		
.670								-.0950
.700					.0157			
.725				.0417				
.750						.1961	.0781	
.760			.0419					
.775				.2713	.1510			
.798		.0667						
.808			.1356					
.834	.0118							
.839		.0517						
.850				-.0345	-.1057	-.0626		
.857			-.0285					
.862								-.2263
.865	.1460							
.873		-.0690						
.900	-.0814			-.0949			-.1117	
.905			-.0949					
.919		-.1035						

```
                                AMES 11-073(OA148) -140A/B/C/R ORB LEFT WING BOT            (XE8L32)
ALPHA ( 3) =    4.016    BETA  ( 2) =    -3.855

 SECTION ( 1)LEFT WING BOT SURF             DEPENDENT VARIABLE CP

2Y/BW        .2990   .3640   .4270   .5340   .6730   .7800   .8870   .9720

  X/CW
   .950                              -.0649  -.0373  -.0650
   .953                      -.0559
   .955              -.0874
   .965      -.0528
  1.000                       .0402           .0190           -.0069
ALPHA ( 3) =    4.015    BETA  ( 3) =     .196   MACH   =  .59602    Q     =  593.50     P     =  2386.4     RN/L   =  4.8147

 SECTION ( 1)LEFT WING BOT SURF             DEPENDENT VARIABLE CP

2Y/BW        .2990   .3640   .4270   .5340   .6730   .7800   .8870   .9720

  X/CW
   .010      -.0838  -.0734   .3000   .2002   .1816   .2919   .3046
   .020       .0000   .0355   .2938   .0882   .1313   .1554   .1816  -.2421
   .040               .0774   .1657
   .050       .0071                   .0450   .0470   .0706   .0875
   .063                                                               -.1923
   .080                               .0280
   .081                       .0774
   .086               .1589
   .094       .0193
   .150                               .0284   .0337   .0524   .0166
   .157                                                               -.1811
   .163               .1541
   .177                       .0366
   .229       .0526
   .246               .0253
   .250                               .0284   .0243   .0202  -.0029
   .274                       .0293
   .345                                                               -.1248
   .390               .0291
   .400                               .0165   .0241          -.0022
   .402                       .0250
   .503                                                               -.1329
   .550                              -.0185  -.0156
   .565                      -.2493
   .600                                                      -.0138
   .637              -.0405
   .650                                               .0223
   .670                                                               -.1310
   .700                                       .0120
   .725                               .0363
   .750                                               .1789   .0543
   .780                       .0376
```

```
DATE 10 FEB 76            TABULATED PRESSURE DATA - OA148 ( AMES 11-073-1 )                                 PAGE 1978

                                 AMES 11-073(OA148) -140A/B/C/R ORB LEFT WING BOT               (XEBL32)

ALPHA ( 3) =    4.015    BETA  ( 3) =      .196

 SECTION ( 1)LEFT WING BOT SURF             DEPENDENT VARIABLE CP

2Y/BW          .2990     .3640     .4270     .5340     .6730     .7800     .8870     .9720

  X/CW
    .775                                      .2669     .1409
    .798                 .0637
    .808                           .1298
    .834       .0095
    .839                 .0479
    .850                                     -.0450    -.1175    -.0743
    .857                          -.0352
    .862                                                                            -.2489
    .865       .1346
    .879                -.0698
    .900      -.0775                         -.1026                        -.1149
    .905                          -.1038
    .919                -.1054
    .950                                     -.0798    -.0677    -.0717
    .953                          -.0722
    .955                -.0976
    .965      -.0668
   1.000                           .0133               .0118               -.0065
ALPHA ( 3) =    4.015    BETA  ( 4) =    4.243   MACH   =  .59602     Q     =  593.50     P     =  2386.4     RN/L   =  4.8147

 SECTION ( 1)LEFT WING BOT SURF             DEPENDENT VARIABLE CP

2Y/BW          .2990     .3640     .4270     .5340     .6730     .7800     .8870     .9720

  X/CW
    .010      -.2174    -.2444     .2191     .2470     .2287     .2968     .2920
    .020       .0000    -.0808     .2595     .1372     .1670     .1881     .1942    -.4310
    .040                -.0241     .1856
    .050      -.0514                         .0905     .0830     .0964     .1049
    .069                                                                            -.3320
    .080                                     .0521
    .081                           .0952
    .086                 .1183
    .094      -.0240
    .150                                     .0412     .0570     .0530     .0173
    .157                                                                            -.2410
    .163                 .1533
    .177                           .0495
    .229       .0378
    .246                 .0308
    .250                                     .0320     .0275     .0301    -.0109
    .274                           .0338
    .345                                                                            -.1944
    .390                 .0308
```

```
                              AMES 11-073(OA148) -140A/B/C/R ORB LEFT WING BOT          (XE8L32)
ALPHA ( 3) =    4.015   BETA  ( 4) =    4.243
 SECTION ( 1)LEFT WING BOT SURF             DEPENDENT VARIABLE CP
2Y/BW        .2990   .3640   .4270   .5340   .6730   .7800   .8870   .9720

  X/CW
    .400                             .0151   .0216           -.0144
    .402                     .0264
    .503                                                             -.1977
    .550                            -.0177  -.0104
    .565                    -.2403
    .600                                                     -.0223
    .637            -.0368
    .650                                             .0150
    .670                                                             -.1634
    .700                                     .0117
    .725                             .0310
    .750                                             .1703   .0592
    .760                     .0324
    .775                             .2604   .1267
    .798             .0633
    .808                     .1182
    .834     .0062
    .839             .0431
    .850                            -.0467  -.1185  -.0741
    .857                    -.0400
    .862                                                             -.2745
    .865     .1304
    .879            -.0585
    .900    -.0624                  -.1142                   -.1211
    .905                    -.1085
    .919            -.1048
    .950                            -.0962  -.0787  -.0835
    .953                    -.0828
    .955            -.0974
    .965    -.0603
   1.000                    -.0114          -.0085           -.0133
ALPHA ( 3) =    4.018   BETA  ( 5) =    8.295   MACH  =  .59602    Q     =  593.50    P     =  2386.4    RN/L  =  4.8147
 SECTION ( 1)LEFT WING BOT SURF             DEPENDENT VARIABLE CP
2Y/BW        .2990   .3640   .4270   .5340   .6730   .7800   .8870   .9720

  X/CW
    .010    -.3980  -.3807   .0745   .2671   .2259   .2649   .2390
    .020     .0000  -[illegible]33   .1802   .1776   .1820   .1887   .1722  -.6195
    .040            -.1327   .1814
    .050    -.1362                   .1127   .1150   .1005   .0910
    .069                                                             -.4755
    .080                             .0715
```

AMES 11-073(OA148) -140A/B/C/R ORB LEFT WING BOT (XEBL32)

ALPHA (3) = 4.018 BETA (5) = 8.295

SECTION (1)LEFT WING BOT SURF DEPENDENT VARIABLE CP

2Y/BW	.2990	.3640	.4270	.5340	.6730	.7800	.8870	.9720
X/CW								
.081			.1084					
.085		.0576						
.094	-.0757							
.150				.0395	.0589	.0620	-.0029	
.157								-.3069
.163		.1395						
.177			.0567					
.229	.0019							
.246		.0370						
.250				.0375	.0286	.0207	-.0289	
.274			.0386					
.345								-.2691
.390		.0340						
.400				.0102	.0194		-.0337	
.402			.0232					
.503								-.2591
.550				-.0204	-.0163			
.565			-.2990					
.600							-.0408	
.637		-.0428						
.650						.0063		
.670								-.2086
.700					.0095			
.725				.0283				
.750						.1463	.0452	
.760			.0358					
.775				.2382	.1116			
.798		.0553						
.808			.1139					
.834	.0100							
.839		.0470						
.850				-.0482	-.1269	-.0874		
.857			-.0360					
.862								-.2884
.865	.1407							
.879		-.0490						
.900	-.0467			-.1054			-.1372	
.905			-.0958					
.919		-.0952						
.950				-.0921	-.0916	-.1067		
.953			-.0747					
.955		-.0895						
.965	-.0482							
1.000			-.0013		-.0535		-.0337	

AMES 11-073(OA148) -140A/B/C/R ORB LEFT WING BOT (XEBL32)

ALPHA (4) = 8.080 BETA (1) = -7.877 MACH = .59636 Q = 594.21 P = 2386.7 RN/L = 4.8181

SECTION (1)LEFT WING BOT SURF DEPENDENT VARIABLE CP

2Y/BW	.2990	.3640	.4270	.5340	.6730	.7800	.8870	.9720
X/CW								
.010	-.0413	-.1216	.3873	.5165	.5358	.5873	.5506	
.020	.0000	.0824	.4435	.3934	.4629	.5004	.5047	-.3990
.040		.1485	.3465					
.050	.1019			.2724	.3284	.3633	.3775	
.059								-.2069
.080				.2189				
.081			.2372					
.086		.2692						
.094	.1111							
.150				.1838	.2193	.2432	.2143	
.157								-.1570
.163		.2721						
.177			.1666					
.229	.1436							
.246		.1504						
.250				.1592	.1702	.1785	.1469	
.274			.1398					
.345								-.0515
.390		.1277						
.400				.1179	.1352		.1081	
.402			.1256					
.503								-.0655
.550				.0579	.0753			
.565			-.3189					
.600							.0610	
.637		.0251						
.650						.0894		
.670								-.0411
.700					.0706			
.725				.0942				
.750						.2330	.1294	
.760			.0794					
.775				.3099	.1885			
.799		.1085						
.809			.1728					
.834	.0451							
.839		.0817						
.850				.0048	-.0704	-.0338		
.857			.0080					
.863								-.2538
.865	.1789							
.873		-.0348						
[illegible]	-.0531			-.0638			-.1168	
[illegible]			-.0633					
.919		-.0684						

```
                          AMES 11-073(OA148) -140A/B/C/R ORB LEFT WING BOT          (XEBL32)

ALPHA ( 4) =    8.080    BETA  ( 1) =   -7.877

 SECTION ( 1)LEFT WING BOT SURF            DEPENDENT VARIABLE CP

2Y/BW        .2990    .3640    .4270    .5340    .6730    .7800    .8870    .9720

  X/CW
    .950                                -.0541   -.0243   -.0694
    .953                       -.0370
    .955              -.0562
    .965     -.0261
   1.000                        .0400             .0156            -.1483

ALPHA ( 4) =    9.083    BETA  ( 2) =   -3.848   MACH    =  .59636    Q      =  534.21    P      =  2386.7    RN/L   =  4.F.81

 SECTION ( 1)LEFT W. G BOT SURF            DEPENDENT VARIABLE CP

2Y/BW        .2990    .3640    .4270    .5340    .6730    .7800    .8870    .9720

  X/CW
    .010     -.1994   -.3549    .2545    .4966    .4979    .5135    .4611
    .020      .0000   -.0624    .3740    .4007    .4462    .4618    .4458   -.6305
    .040               .0222    .3431
    .050      .0285                      .2944    .3235    .3454    .3480
    .069                                                                   -.3815
    .080                                 .2333
    .081                        .2416
    .086               .2171
    .094      .0612
    .150                                 .1867    .2137    .2320    .1815
    .157                                                                   -.2104
    .163               .2714
    .177                        .1792
    .229      .1216
    .246               .1509
    .250                                 .1561    .1605    .1642    .1206
    .274                        .1419
    .345                                                                   -.1331
    .390               .1297
    .400                                 .1081    .1249             .0839
    .402                        .1191
    .503                                                                   -.1422
    .550                                 .0551    .0658
    .565                       -.2606
    .600                                                            .0365
    .637               .0259
    .650                                                   .0739
    .670                                                                   -.0976
    .700                                          .0599
    .725                                 .0860
    .750                                                   .2194    .1067
    .760                        .0763
```

```
                             AMES 11-073(OA148) -140A/B/C/R ORB LEFT WING BOT              (XE8L32)

ALPHA ( 4) =    8.089    BETA  ( 2) =    -3.848

 SECTION ( 1)LEFT WING BOT SURF             DEPENDENT VARIABLE CP

2Y/BW         .2990    .3640    .4270    .5340    .6730    .7800    .8870    .9720

  X/CW
      .775                               .3084    .1793
      .798             .1019
      .808                      .1718
      .834    .0531
      .839             .0814
      .850                              -.0057   -.0837   -.0461
      .857                      .0045
      .862                                                                  -.2865
      .865    .1837
      .879            -.0305
      .900   -.0471                     -.0785                     -.1232
      .905                     -.0708
      .919            -.0713
      .950                              -.0690   -.0474   -.0889
      .953                     -.0451
      .955            -.0607
      .965   -.0362
     1.000                      .0380            -.0048            -.1355
ALPHA ( 4) =    8.087    BETA  ( 3) =     .188  MACH  =  .59636    Q    =  594.21    P    =  2386.7    RN/L  =  4.8181

 SECTION ( 1)LEFT WING BOT SURF             DEPENDENT VARIABLE CP

2Y/BW         .2990    .3640    .4270    .5340    .6730    .7800    .8870    .9720

  X/CW
      .010   -.3850   -.5893    .0919    .4458    .4404    .4227    .3530
      .020    .0000   -.2293    .2726    .3917    .4046    .4073    .3752   -.8537
      .040            -.1216    .3082
      .050   -.0603                      .2860    .3119    .3139    .2988
      .069                                                                  -.5440
      .080                               .2247
      .081                      .2344
      .086             .1446
      .094    .0017
      .150                               .1726    .1998    .2121    .1444
      .157                                                                  -.2838
      .163             .2532
      .177                      .1683
      .229    .0887
      .246             .1403
      .250                               .1444    .1440    .1430    .0881
      .274                      .1370
      .345                                                                  -.2236
      .399             .1233
```

AMES 11-073(OA148) -140A/B/C/R ORB LEFT WING BOT (XEBL32)

ALPHA (4) = 8.087 BETA (3) = .188

SECTION (1)LEFT WING BOT SURF DEPENDENT VARIABLE CP

2Y/BW	.2990	.3640	.4270	.5340	.6730	.7800	.8870	.9720
X/CW								
.400				.1009	.1078		.0528	
.402			.1082					
.503								-.2113
.550				.0484	.0520			
.565			-.2717					
.600							.0100	
.637		.0182						
.650						.0545		
.670								-.1499
.700					.0525			
.725				.0764				
.750						.1999	.0848	
.760			.0653					
.775				.3016	.1645			
.799		.1041						
.808			.1660					
.834	.0427							
.839		.0821						
.850				-.0148	-.1004	-.0607		
.857			.0004					
.862								-.3106
.865	.1746							
.879		-.0308						
.900	-.0441			-.0823			-.1387	
.905			-.0741					
.919		-.0734						
.950				-.0714	-.0559	-.0999		
.953			-.0459					
.955		-.0680						
.965	-.0380							
1.000			.0415		-.0388		-.1607	

ALPHA (4) = 8.086 BETA (4) = 4.243 MACH = .59636 Q = 594.21 P = 2386.7 RN/L = 4.818

SECTION (1)LEFT WING BOT SURF DEPENDENT VARIABLE CP

2Y/BW	.2990	.3640	.4270	.5340	.6730	.7800	.8870	.9720
X/CW								
.010	-.5666	-.7218	-.0960	.3821	.3719	.3067	.2307	
.020	.0000	-.3627	.1384	.3510	.3697	.3603	.3002	-1.1324
.040		-.2527	.2586					
.050	-.1591			.2696	.3021	.2899	.2622	
.069								-.7352
.080				.2116				

AMES 11-073(OA148) -140A/B/C/R ORB LEFT WING BOT (XEBL32)

ALPHA (4) = 8.086 BETA (4) = 4.243

SECTION (1)LEFT WING BOT SURF DEPENDENT VARIABLE CP

2Y/BW	.2900	.3640	.4270	.5340	.6730	.7800	.8870	.9720
X/CW								
.081			.2165					
.086		.0646						
.094	-.0612							
.150				.1668	.1920	.1993	.1210	
.157								-.3612
.163		.2122						
.177			.1602					
.229	.0429							
.246		.1215						
.250				.1372	.1328	.1285	.0628	
.274			.1329					
.345								-.3145
.390		.1152						
.400				.0963	.1003		.0266	
.402			.1016					
.503								-.2939
.550				.0440	.0448			
.555			-.2777					
.600							-.0112	
.637		.0214						
.650						.0421		
.670								-.1980
.700					.0434			
.725				.0649				
.750						.1755	.0647	
.760			.0690					
.775				.2871	.1431			
.799		.0959						
.808			.1588					
.834	.0462							
.839		.0822						
.850				-.0120	-.1054	-.0698		
.857			-.0003					
.862								-.3474
.865	.1786							
.873		-.0269						
.900	-.0252			-.0771			-.1655	
.915			-.0670					
.933		-.0707						
.950				-.0586	-.0666	-.1168		
.953			-.0454					
.955		-.0665						
.965	-.0304							
1.000			.0258		-.0092		-.1790	

DATE 10 FEB 76 TABULATED PRESSURE DATA - OA148 (AMES 11-073-1) PAGE 1986

AMES 11-073(OA148) -140A/B/C/R ORB LEFT WING BOT (XEBL32)

ALPHA (4) = 8.082 BETA (5) = 8.301 MACH = .59636 Q = 594.21 P = 2386.7 RN/L = 4.8181

SECTION (1)LEFT WING BOT SURF DEPENDENT VARIABLE CP

2Y/BW	.2990	.3640	.4270	.5340	.6730	.7800	.8870	.9720
X/CW								
.010	-.7771	-.6645	-.3224	.2753	.2678	.1552	.0703	
.020	.0000	-.4514	-.0230	.2948	.2935	.2724	.1970	-1.3614
.040		-.3472	.1840					
.050	-.2744			.2492	.2659	.2427	.2030	
.069								-.9367
.080				.1973				
.081			.1883					
.095		-.0181						
.094	-.1524							
.150				.1393	.1671	.1696	.0752	
.157								-.4557
.163		.1699						
.177			.1481					
.229	.0016							
.246		.1028						
.250				.1176	.1187	.1132	.0322	
.274			.1156					
.345								-.4050
.330		.1031						
.400				.0749	.0853		-.0066	
.402			.0854					
.503								-.3625
.550				.0248	.0353			
.565			-.3005					
.600							-.0335	
.637		.0102						
.650						.0232		
.670								-.2544
.700					.0290			
.725				.0554				
.750						.1502	.0365	
.760			.0650					
.775				.2675	.1224			
.798		.0835						
.808			.1465					
.834	.0379							
.839		.0720						
.850				-.0175	-.1012	-.0799		
.857			-.0049					
.862								-.3774
.855	.1753							
.879		-.0219						
.900	-.0245			-.0820			-.1815	
.905			-.0679					
.913		-.0721						

```
                              AMES 11-073(OA148) -140A/B/C/R ORB LEFT WING BOT         (XEBL32)
ALPHA ( 4) =    8.082    BETA  ( 5) =    8.301
 SECTION ( 1)LEFT WING BOT SURF            DEPENDENT VARIABLE CP
2Y/BW       .2990   .3640   .4270   .5340   .6730   .7800   .8870   .9720

 X/CW
   .950                             -.0597  -.0659  -.1301
   .953                     -.0584
   .955             -.0756
   .965     -.0340
  1.000                      .0067           -.0201          -.2170
ALPHA ( 5) =   12.017    BETA  ( 1) =   -7.830    MACH   =  .59626     Q      =  593.97     P      =  2386.7     RN/L   =  4.8175
 SECTION ( 1)LEFT WING BOT SURF            DEPENDENT VARIABLE CP
2Y/BW       .2990   .3640   .4270   .5340   .6730   .7800   .8870   .9720

 X/CW
   .010    -.3367  -.7185   .0756   .5905   .5875   .4760   .3947
   .020     .0000  -.1942   .3601   .5833   .6094   .5900   .5243  -.9365
   .040            -.0690   .4594
   .050     .0458                   .4814   .5307   .5270   .5062
   .069                                                             -.5038
   .080                             .4044
   .081                     .3862
   .086             .2611
   .094     .1188
   .150                             .3292   .3716   .3881   .3153
   .157                                                             -.2375
   .163             .3752
   .177                     .3032
   .229     .2036
   .246             .2726
   .250                             .2758   .2896   .2917   .2432
   .274                     .2525
   .345                                                             -.0941
   .390             .2323
   .400                             .2140   .2264           .1801
   .402                     .2169
   .503                                                             -.1076
   .550                             .1326   .1450
   .565                    -.3084
   .600                                                     .1011
   .637             .0937
   .650                                             .1365
   .670                                                             -.0521
   .700                                     .1180
   .725                             .1383
   .750                                             .2584   .1583
   .760                     .1169
```

REPRODUCIBILITY OF THE
ORIGINAL PAGE IS POOR

```
                              AMES 11-073(OA148) -140A/B/C/R ORB LEFT WING BOT            (XE8L32)

ALPHA ( 5) =    12.017    BETA  ( 1) =   -7.830

 SECTION ( 1)LEFT WING BOT SURF            DEPENDENT VARIABLE CP

2Y/BW        .2990   .3640   .4270   .5340   .6730   .7800   .8870   .9720

  X/CW
    .775                              .3508   .2219
    .798              .1410
    .808                      .2086
    .834      .0831
    .839              .1280
    .850                              .0422  -.0383  -.0069
    .857                      .0458
    .862                                                             -.2855
    .865      .2194
    .879              .0063
    .900     -.0099                  -.0340                  -.1292
    .905                     -.0311
    .919             -.0361
    .950                             -.0300  -.0195  -.0840
    .953                     -.0038
    .955             -.0431
    .965     -.0068
   1.000                      .0614           .0186          -.2976

ALPHA ( 5) =    12.037    BETA  ( 2) =   -3.825   MACH   =  .59626     Q     =  593.97     P     =  2386.7     RN/L   =  4.8175

 SECTION ( 1)LEFT WING BOT SURF            DEPENDENT VARIABLE CP

2Y/BW        .2990   .3640   .4270   .5340   .6730   .7800   .8870   .9720

  X/CW
    .010     -.5765  -.9562  -.1505   .4843   .4853   .3306   .2464
    .020      .0000  -.3329   .2088   .5206   .5387   .5079   .4236 -1.1688
    .040             -.2232   .4012
    .050     -.0563                   .4524   .4952   .4840   .4405
    .069                                                             -.6936
    .080                              .3855
    .081                      .3673
    .086              .1731
    .094      .0455
    .150                              .3119   .3495   .3640   .2768
    .157                                                             -.3051
    .163              .3465
    .177                      .2966
    .229      .1599
    .246              .2566
    .250                              .2678   .2728   .2705   .2055
    .274                      .2467
    .345                                                             -.1919
    .390              .2257
```

```
                              AMES 11-073(OA148) -140A/B/C/R ORB LEFT WING BOT          (XE8L32)

ALPHA ( 5) =   12.037   BETA  ( 2) =   -3.825

 SECTION ( 1)LEFT WING BOT SURF              DEPENDENT VARIABLE CP

2Y/BW      .2990   .3640   .4270   .5340   .6730   .7800   .8870   .9720

  X/CW
   .400                            .2000   .2086           .1441
   .402                    .2038
   .503                                                           -.1951
   .550                            .1255   .1286
   .565                   -.2731
   .600                                                    .0714
   .637            .0906
   .650                                            .1184
   .670                                                           -.1092
   .700                                    .1020
   .725                            .1309
   .750                                            .2376   .1347
   .760                    .1170
   .775                            .3495   .2022
   .798            .1446
   .808                    .2116
   .834    .0867
   .839            .1234
   .850                            .0334  -.0586  -.0276
   .857                    .0401
   .862                                                           -.3223
   .865    .2208
   .879            .0055
   .900   -.0104                  -.0377                  -.1527
   .905                   -.0287
   .919           -.0404
   .950                           -.0272  -.0302  -.1049
   .953                   -.0119
   .955           -.0448
   .965   -.0258
  1.000                    .0607           .0171          -.3479
ALPHA ( 5) =   12.038    BETA  ( 3) =     .185   MACH   =  .59626     Q    =  593.97     P    =  2386.7    RN/L   =  4.8175

 SECTION ( 1)LEFT WING BOT SURF              DEPENDENT VARIABLE CP

2Y/BW      .2990   .3640   .4270   .5340   .6730   .7800   .8870   .9720

  X/CW
   .010   -.8104 -1.1653  -.3925   .3591   .3648   .1680   .0841
   .020    .0000  -.5665   .0350   .4450   .4489   .4115   .3055 -1.3901
   .040           -.3974   .3201
   .050   -.1762                   .4113   .4448   .4224   .3606
   .069                                                           -.8675
   .080                            .3523
```

DATE 10 FEB 76 TABULATED PRESSURE DATA - OA148 (AMES 11-073-1)

AMES 11-073(OA148) -140A/B/C/R ORB LEFT WING BOT (XEBL32)

ALPHA (5) = 12.038 BETA (3) = .185

SECTION (1)LEFT WING BOT SURF DEPENDENT VARIABLE CP

2Y/BW	.2990	.3640	.4270	.5340	.6730	.7800	.8870	.9720
X/CW								
.081			.3308					
.086		.0738						
.094	-.0462							
.150				.2862	.3235	.3268	.2302	
.157								-.3774
.163		.2984						
.177			.2754					
.229	.1031							
.246		.2299						
.250				.2418	.2503	.2421	.1628	
.274			.2329					
.345								-.2832
.390		.2079						
.400				.1809	.1699		.1032	
.402			.1878					
.503								-.2730
.550				.1163	.1126			
.565			-.2693					
.600							.0405	
.637		.0840						
.650						.0969		
.670								-.1706
.700					.0872			
.725				.1161				
.750						.2115	.1030	
.760			.1049					
.775				.3384	.1819			
.798		.1357						
.808			.1996					
.834	.0803							
.839		.1163						
.850				.0211	-.0685	-.0416		
.857			.0353					
.862								-.3524
.865	.2168							
.879		.0033						
.900	-.0071			-.0511			-.1724	
.905			-.0388					
.919		-.0441						
.950				-.0409	-.0410	-.1201		
.963			-.0310					
.965		-.0511						
.985	-.0282							
1.000			.0179		-.0064		-.3013	

```
                              AMES 11-073(OA148) -140A/B/C/R ORB LEFT WING BOT                 (XEBL32)

ALPHA ( 5) =   12.033   BETA  ( 4) =    4.256  MACH   =  .59626    Q     =  593.97    P     =  2386.7    RN/L   =  4.8175

 SECTION ( 1)LEFT WING BOT SURF            DEPENDENT VARIABLE CP

2Y/BW      .2990    .3640    .4270    .5340    .6730    .7800    .8870    .9720

  X/CW
   .010  -1.0016   -.9609   -.5812    .2240    .2233   -.0376   -.1095
   .020    .0000   -.6205   -.1311    .3505    .3467    .2988    .1716  -1.5876
   .040            -.4807    .2237
   .050   -.2966                      .3573    .3821    .3578    .2863
   .069                                                                -1.0328
   .080                               .3157
   .081                      .2776
   .086            -.0231
   .094   -.1405
   .150                               .2527    .2978    .2912    .1892
   .157                                                                 -.4441
   .163             .2420
   .177                      .2479
   .223    .0531
   .246             .1919
   .250                               .2158    .2247    .2206    .1267
   .274                      .2032
   .345                                                                 -.3608
   .390             .1942
   .400                               .1566    .1687             .0739
   .402                      .1659
   .503                                                                 -.3357
   .550                               .0976    .1044
   .565                     -.2946
   .600                                                          .0214
   .637             .0764
   .650                                                 .0788
   .670                                                                 -.2203
   .700                                        .0750
   .725                               .1031
   .750                                                 .1932    .0777
   .760                      .0987
   .775                               .3186    .1656
   .798             .1285
   .809                      .1842
   .834    .0742
   .839             .1106
   .850                               .0133   -.0690   -.0445
   .857                      .0262
   .862                                                                 -.3607
   .866    .2117
   .879             .0087
   .900   -.0053                     -.0641                     -.1657
   .905                     -.0432
   .913            -.0486
```

```
                                     AMES 11-073(OA148) -140A/B/C/R ORB LEFT WING BOT                (XEBL32)
ALPHA ( 5) =    12.033    BETA  ( 4) =    4.256

 SECTION ( 1)LEFT WING BOT SURF                 DEPENDENT VARIABLE CP

2Y/BW        .2930    .3640    .4270    .5340    .6730    .7800    .8870    .9720

  X/CW
    .950                                -.0589   -.0544   -.1302
    .953                       -.0399
    .955              -.0547
    .965     -.0214
   1.000                        .0098            -.0260            -.2540
ALPHA ( 5) =    12.024    BETA  ( 5) =    8.318   MACH   =   .59626      Q      =  593.97     P      =  2386.7     RN/L    =  4.8175
 SECTION ( 1)LEFT WING BOT SURF                 DEPENDENT VARIABLE CP

2Y/BW        .2930    .3640    .4270    .5340    .6730    .7800    .8870    .9720

  X/CW
    .010   -1.2528   -.7438   -.8296    .0459    .0562   -.2474   -.3129
    .020     .0000   -.6588   -.3441    .2468    .2343    .1609    .0299  -1.7524
    .040             -.5505    .1126
    .050    -.4447                      .2965    .3154    .2860    .1963
    .069                                                                  -1.1896
    .080                                .2675
    .081                        .2291
    .085             -.1057
    .094    -.2332
    .150                                .2237    .2539    .2565    .1339
    .157                                                                   -.5119
    .153              .1855
    .177                        .2213
    .229    -.0020
    .246              .1543
    .250                                .1942    .2050    .1888    .0988
    .274                        .1906
    .345                                                                   -.4392
    .390              .1748
    .400                                .1452    .1532             .0413
    .402                        .1552
    .503                                                                   -.4139
    .550                                .0673    .0839
    .565                       -.3243
    .600                                                          -.0056
    .637              .0775
    .650                                                  .0551
    .670                                                                   -.2707
    .700                                         .0595
    .725                                .0930
    .750                                                  .1555    .0487
    .780                        .0927
```

AMES 11-073(OA148) -140A/B/C/R ORB LEFT WING BOT (XEBL32)

ALPHA (5) = 12.024 BETA (5) = 8.318

SECTION (1)LEFT WING BOT SURF DEPENDENT VARIABLE CP

2Y/BW	.2990	.3640	.4270	.5340	.6730	.7800	.8870	.9720
X/CW								
.775				.3003	.1313			
.798		.1196						
.808			.1715					
.834	.0761							
.839		.1085						
.850				-.0023	-.0831	-.0577		
.857			.0256					
.862								-.3477
.865	.2156							
.879		.0055						
.900	.0153			-.0765			-.1883	
.905			-.0526					
.919		-.0516						
.950				-.0988	-.0675	-.1340		
.953			-.0490					
.975		-.0631						
.985	-.0357							
1.000			-.0074		-.0711		-.2056	

AMES 11-073(OA148) -140A/B/C/R ORB LEFT WING BOT (XE8L33) (05 AUG 75)

REFERENCE DATA

SREF = 2690.0000 SQ.FT. XMRP = 1076.6800 IN. XO
LREF = 474.8000 IN. YMRP = .0000 IN. YO
BREF = 936.0680 IN. ZMRP = 375.0000 IN. ZO
SCALE = .0300

PARAMETRIC DATA

RUDDER = 10.000 SPDBRK = 35.000
BDFLAP = 16.300 L-ELVN = .000
R-ELVN = 10.000 MACH = 1.400

ALPHA (1) = -4.110 BETA (1) = -3.848 MACH = 1.3952 Q = 599.12 P = 439.71 RN/L = 2.9043

SECTION (1)LEFT WING BOT SURF DEPENDENT VARIABLE CP

2Y/BW	.2990	.3640	.4270	.5340	.6730	.7800	.8870	.9720
X/CW								
.010	-.1792	-.2509	-.1412	-.2767	-.3590	-.2179	-.1913	
.020	.0000	-.2417	-.2536	-.4131	-.4000	-.4099	-.4040	-.4579
.040		-.2346	-.3241					
.050	-.1582			-.4481	-.4279	-.4442	-.4333	
.069								-.4946
.080				-.4440				
.081			-.1913					
.086		-.1293						
.094	-.1419							
.150				-.4043	-.3922	-.3957	-.3977	
.157								-.3082
.163		-.0335						
.177			-.1754					
.229	-.1076							
.246		-.1159						
.250				-.2155	-.3633	-.3583	-.3683	
.274			-.1613					
.345								-.4163
.390		-.1369						
.400				-.1725	-.3149		-.3316	
.402			-.1499					
.503								-.3507
.540				-.1401	-.1632			
.565			-.2874					
.600							-.3207	
.637		-.0950						
.653						-.3201		
.670								-.4572
.700					-.2075			
.725				-.1668				
.750						-.2678	-.3570	
.760			-.1837					
.775				-.2231	-.2414			
.793		-.1733						
.809			-.2461					
.834	-.1892							
.839		-.2411						
.950				-.2936	-.2199	-.3038		

```
DATE 10 FEB 76              TABULATED PRESSURE DATA - OA148 ( AMES 11-073-1 )                                              PAGE 1995

                                         AMES 11-073(OA148) -140A/B/C/R ORB LEFT WING BOT                     (XEBL33)

ALPHA ( 1) =    -4.110     BETA  ( 1) =    -3.848

 SECTION ( 1)LEFT WING BOT SURF               DEPENDENT VARIABLE CP

2Y/BW        .2990    .3540    .4270    .5340    .6730    .7800    .8870    .9720

  X/CW
    .857                      -.2624
    .862                                                                    -.4615
    .865   -.2302
    .879            -.2786
    .900   -.1985                      -.3414                     -.4221
    .905                      -.3451
    .919            -.2824
    .950                               -.3632   -.3121   -.3616
    .953                      -.3612
    .955            -.2867
    .965   -.2735
   1.000                      -.0946            -.2047            -.4041

ALPHA ( 1) =    -4.105     BETA  ( 2) =      .195    MACH   =  1.3952     Q      =  599.12     P      =  439.71     RN/L   =  2.9043

 SECTION ( 1)LEFT WING BOT SURF               DEPENDENT VARIABLE CP

2Y/BW        .2990    .3540    .4270    .5340    .6730    .7800    .8870    .9720

  X/CW
    .010   -.0990   -.1196   -.0657   -.2787   -.3799   -.2597   -.2443
    .020    .0000   -.1189   -.1314   -.4144   -.4169   -.4393   -.4330   -.5057
    .040            -.1170   -.1820
    .050   -.1028                      -.4349   -.4391   -.4690   -.4628
    .069                                                                    -.5183
    .080                               -.3971
    .081                      -.1556
    .086            -.0553
    .094   -.0970
    .150                               -.3260   -.4001   -.4161   -.4264
    .157                                                                    -.3290
    .163             .0136
    .177                      -.1331
    .223   -.0697
    .245            -.0759
    .250                               -.1577   -.3622   -.3756   -.3968
    .274                      -.1267
    .345                                                                    -.4685
    .370            -.0955
[illegible]                            -.1430   -.1612            -.3511
    .472                      -.1135
    .503                                                                    - 3624
[illegible]                            -.1087   -.1406
[illegible]                   -.3052
[illegible]                                                       -.33[illegible]
```

AMES 11-073(OA148) -140A/B/C/R ORB LEFT WING BOT (XE8L33)

ALPHA (1) = -4.105 BETA (2) = .195

SECTION (1)LEFT WING BOT SURF DEPENDENT VARIABLE CP

2Y/BW	.2990	.3640	.4270	.5340	.6730	.7800	.8870	.9720
X/CW								
.637		-.0742						
.650						-.1877		
.670								-.4489
.700					-.1752			
.725				-.1548				
.750						-.1990	-.3487	
.760			-.1730					
.775				-.2150	-.2179			
.798		-.1615						
.809			-.2321					
.834	-.1680							
.839		-.2254						
.850				-.2862	-.1851	-.2806		
.857			-.2520					
.862								-.5093
.865	-.2125							
.879		-.2592						
.900	-.1919			-.3283			-.3307	
.905			-.3253					
.919		-.2724						
.950				-.3534	-.3314	-.3438		
.953			-.3425					
.955		-.2819						
.965	-.3029							
1.000			-.1069		-.2297		-.2992	

ALPHA (1) = -4.114 BETA (3) = 4.277 MACH = 1.3952 Q = 599.12 P = 439.71 RN/L = 2.9043

SECTION (1)LEFT WING BOT SURF DEPENDENT VARIABLE CP

2Y/BW	.2990	.3640	.4270	.5340	.6730	.7800	.8870	.9720
X/CW								
.010	-.0773	-.0363	.0309	-.2679	-.3873	-.2958	-.2770	
.020	.0000	-.0500	-.0040	-.3947	-.4284	-.4539	-.4608	-.5248
.040		-.0448	-.0784					
.050	-.0777			-.3572	-.4497	-.4797	-.4862	
.069								-.5222
.080				-.3453				
.081			-.0263					
.086		-.0069						
.094	-.0858							
.150				-.1850	-.3850	-.4214	-.4375	
.157								-.3355
.163		.0456						

```
                                AMES 11-C73(OA148) -140A/B/C/R ORB LEFT WING BOT                (XE6L33)
ALPHA ( 1) =   -4.114    BETA  ( 3) =    4.277
 SECTION ( 1)LEFT WING BOT SURF             DEPENDENT VARIABLE CP
2Y/BW       .2990    .3640    .4270    .5340    .6730    .7800    .8870    .9720
  X/CW
   .177                     -.0966
   .229    -.0522
   .246             -.0476
   .250                              -.1363   -.1889   -.3674   -.4067
   .274                     -.0893
   .345                                                                  -.4260
   .390             -.0632
   .400                              -.1067   -.1321            -.3544
   .402                     -.0827
   .503                                                                  -.3542
   .550                              -.0890   -.1041
   .565                     -.2931
   .600                                                         -.1662
   .637             -.0611
   .650                                                -.1522
   .670                                                                  -.4010
   .700                                       -.1543
   .725                              -.1451
   .750                                                -.1787   -.1892
   .760                     -.1667
   .775                              -.2047   -.1998
   .798             -.1519
   .808                     -.2274
   .834    -.1757
   .839             -.2206
   .850                              -.2714   -.1664   -.2666
   .857                     -.2485
   .862                                                                  -.3743
   .865    -.2126
   .879             -.2579
   .900    -.2005                    -.3165                     -.2914
   .905                     -.3162
   .919             -.2744
   .950                              -.3485   -.2945   -.3191
   .953                     -.3335
   .955             -.2813
   .965    -.3167
  1.000                     -.1205            -.2291            -.1324
```

AMES 11-073(OA148) -140A/B/C/R ORB LEFT WING BOT (XEBL33)

ALPHA (2) = -.049 BETA (1) = -3.866 MACH = 1.3944 Q = 599.11 P = 440.18 RN/L = 2.9098

SECTION (1)LEFT WING BOT SURF DEPENDENT VARIABLE CP

2Y/BW	.2990	.3640	.4270	.5340	.6730	.7800	.8870	.9720
X/CW								
.010	-.0012	.0158	.2070	-.0869	-.1761	-.1026	-.0223	
.020	.0000	-.0192	.1510	-.2169	-.2254	-.2365	-.2542	-.2184
.040		-.0192	.0117					
.050	-.0284			-.2260	-.2350	-.2637	-.2714	
.069								-.2458
.080				-.1749				
.081			-.0368					
.065		.0248						
.094	-.0478							
.150				-.1220	-.1809	-.1991	-.2177	
.157								-.1905
.163		.0985						
.177			-.0406					
.229	-.0391							
.246		-.0170						
.250				-.0575	-.1307	-.1579	-.1855	
.274			-.0455					
.295								-.1564
.300		-.0350						
.400				-.0566	-.0448		-.1455	
.402			-.0443					
.503								-.1622
.550				-.0344	-.0471			
.565			-.3587					
.600							-.1150	
.637		-.0230						
.650						-.0938		
.670								-.2302
.700					-.1146			
.725				-.0975				
.750						-.1177	-.1342	
.760			-.1237					
.775				-.1660	-.1693			
.798		-.1220						
.808			-.1811					
.834	-.1355							
.839		-.1904						
.850				-.2387	-.2372	-.2327		
.857			-.2118					
.862								-.2707
.865	-.1688							
.879		-.2338						
.900	-.1596			-.2898			-.2702	
.905			-.2924					
.919		-.2605						

```
DATE 10 FEB 76          TABULATED PRESSURE DATA - OA148 ( AMES 11-073-1 )                          PAGE 1999

                         AMES 11-073(OA148) -140A/B/C/R ORB LEFT WING BOT           (XEBL33)

ALPHA ( 2) =    -.049    BETA  ( 1) =   -3.866

 SECTION ( 1)LEFT WING BOT SURF           DEPENDENT VARIABLE CP

2Y/BW       .2990      .340     .4270     .5340     .6730     .7800     .8870     .9720

  X/CW
   .950                                  -.3403    -.2626    -.3059
   .953                        -.3226
   .955              -.2454
   .965    -.2220
  1.000                        -.0854              -.1480              -.3603

ALPHA ( 2) =    -.046    BETA  ( 2) =     .181   MACH   =  1.3944     Q     =  599.11    P     =  440.18    RN/L   =  2.9098

 SECTION ( 1)LEFT WING BOT SURF           DEPENDENT VARIABLE CP

2Y/BW       .2990     .3640     .4270     .5340     .6730     .7800     .8870     .9720

  X/CW
   .010    -.0093     .0045     .2426    -.0823    -.2000    -.1385    -.0716
   .020     .0000    -.0053     .2185    -.1892    -.2315    -.2585    -.2823    -.2507
   .040               .0059     .0714
   .050    -.0243                        -.1148    -.1953    -.2709    -.2977
   .069                                                                        -.2620
   .080                                  -.1129
   .081                         .0052
   .086               .0478
   .094    -.0372
   .150                                  -.0830    -.1377    -.1815    -.2206
   .157                                                                        -.1319
   .163               .1188
   .177                        -.0149
   .229    -.0363
   .246               .0108
   .250                                  -.0377    -.0572    -.1190    -.1903
   .274                        -.0147
   .345                                                                        -.1335
   .330              -.0083
   .400                                  -.0328    -.0363              -.0707
   .402                        -.0234
   .503                                                                        -.0895
   .550                                  -.0219    -.0306
   .565                        -.3528
   .600                                                                -.0814
   .637              -.0019
   .650                                                      -.0780
   .670                                                                        -.1918
   .700                                            -.1005
   .725                                  -.0895
   .750                                                      -.1152    -.1342
   .760                        -.1126
```

REPRODUCIBILITY OF THE
ORIGINAL PAGE IS POOR

```
DATE 10 FEB 76            TABULATED PRESSURE DATA - OA148 ( AMES 11-073-1 )                                        PAGE 2000

                                   AMES 11-073(OA148) -140A/B/C/R ORB LEFT WING BOT                (XEBL33)

ALPHA ( 2) =     -.046    BETA  ( 2) =      .181

 SECTION ( 1)LEFT WING BOT SURF            DEPENDENT VARIABLE CP

2Y/BW        .2990   .3640   .4270   .5340   .6730   .7800   .8870   .9720

  X/CW
    .775                             -.1631  -.1533
    .799             -.1154
    .808                     -.1651
    .834    -.1210
    .839             -.1759
    .850                             -.2272  -.2244  -.2228
    .857                     -.2015
    .862                                                             -.2830
    .865    -.1598
    .879             -.2198
    .900    -.1496                   -.2790                  -.2734
    .905                     -.2797
    .919             -.2380
    .950                             -.3313  -.2453  -.3021
    .953                     -.3086
    .955             -.2309
    .965    -.2393
   1.000                     -.1012          -.1683          -.3146
ALPHA ( 2) =     -.050    BETA  ( 3) =     4.255   MACH   =  1.3944     Q      =  599.11     P      =  440.18     RN/L   =  2.9098

 SECTION ( 1)LEFT WING BOT SURF            DEPENDENT VARIABLE CP

2Y/BW        .2990   .3640   .4270   .5340   .6730   .7800   .8870   .9720

  X/CW
    .010    -.0731  -.0604   .2620  -.0325  -.1814  -.1627  -.0958
    .020     .0000  -.0344   .2461  -.0247  -.1248  -.2515  -.2945  -.1995
    .040            -.0182   .1122
    .050    -.0555                  -.0791  -.1857  -.2346  -.2916
    .069                                                            -.1895
    .080                            -.0592
    .081                     .0421
    .086             .0429
    .094    -.0513
    .150                            -.0423  -.0816  -.1366  -.2052
    .157                                                            -.1687
    .163             .1208
    .177                     .0054
    .229    -.0434
    .246             .0235
    .250                            -.0174  -.0434  -.0453  -.0752
    .274                     .0085
    .345                                                            -.0722
    .390             .0121
```

```
                         AMES 11-073(OA148) -140A/B/C/R ORB LEFT WING BOT              (XEBL33)

ALPHA ( 2) =    -.050    BETA  ( 3) =    4.256

 SECTION ( 1)LEFT WING BOT SURF           DEPENDENT VARIABLE CP

2Y/BW        .2990    .3640    .4270    .5340    .6730    .7800    .8870    .9720

  X/CW
     .400                              -.0105   -.0139            -.0548
     .402                     -.0038
     .503                                                                  -.0954
     .550                              -.0089   -.0111
     .565                     -.3513
     .600                                                         -.0661
     .637             .0059
     .650                                                -.0600
     .670                                                                  -.2023
     .700                                       -.0899
     .725                              -.0823
     .750                                                -.1072   -.1240
     .760                     -.1101
     .775                              -.1551   -.1415
     .798            -.1072
     .808                     -.1605
     .834   -.1179
     .839            -.1671
     .850                              -.2179   -.2087   -.2145
     .857                     -.1979
     .862                                                                  -.2837
     .865   -.1608
     .879            -.2172
     .900   -.1596                     -.2698                     -.2728
     .905                     -.2742
     .919            -.2260
     .940                              -.3234   -.2210   -.3023
     .953                     -.2931
     .955            -.2272
     .965   -.2487
    1.000                     -.1160            -.1771            -.2024

ALPHA ( 3) =     3.895   BETA  ( 1) =   -3.869   MACH   =  1.3948    Q     =  599.42    P     =  440.18    RN/L   =  2.9147

 SECTION ( 1)LEFT WING BOT SURF           DEPENDENT VARIABLE CP

2Y/BW        .2990    .3640    .4270    .5340    .6730    .7800    .8870    .9720

  X/CW
     .010    .0597    .0171    .3993    .2552    .1853    .1803    .2103
     .020    .0000    .0357    .3743    .1807    .1682    .0908    .0424    .0906
     .040             .0530    .2099
     .060    .0478                      .0517    .0235    .0260    .0315
     .069                                                                   .0552
     .080                               .0545
```

```
DATE 10 FEB 76            TABULATED PRESSURE DATA - OA148 ( AMES 11-073-1 )                        PAGE 2002

                                   AMES 11-073(OA148) -140A/B/C/R ORB LEFT WING BOT          (XEBL33)

ALPHA ( 3) =    3.895    BETA  ( 1) =   -3.869

 SECTION ( 1)LEFT WING BOT SURF               DEPENDENT VARIABLE CP

2Y/BW       .2990   .3640   .4270   .5340   .6730   .7800   .8870   .9720

  X/CW
      .081                  .1286
      .086          .1104
      .094  .0290
      .150                          .0517   .0600   .0689   .0819
      .157                                                         -.0683
      .163          .2006
      .177                  .0876
      .229  .0266
      .246          .0801
      .250                          .0766   .0747   .0878   .0682
      .274                  .0743
      .345                                                          .0322
      .390          .0742
      .400                          .0721   .0815           .0632
      .402                  .0677
      .503                                                          .0015
      .550                          .0738   .0872
      .565                 -.4071
      .600                                                  .0088
      .637          .0645
      .658                                          .0239
      .670                                                         -.1313
      .700                                 -.0171
      .725                         -.0162
      .758                                         -.0165  -.0418
      .760                 -.0533
      .775                         -.1291  -.0786
      .798         -.0623
      .808                 -.1048
      .834 -.0719
      .839         -.1357
      .850                         -.1740  -.1941  -.1575
      .857                 -.1569
      .862                                                         -.2306
      .865 -.1073
      .879         -.1782
      .900 -.1487                  -.2305                  -.2177
      .905                 -.2329
      .919         -.2253
      .950                         -.2950  -.2625  -.2578
      .953                 -.2690
      .955         -.2003
      .965 -.1515
     1.000                 -.0873          -.1411          -.4008
```

DATE 10 FEB 75 TABULATED PRESSURE DATA - OA148 (AMES 11-073-1)

AMES 11-073(OA148) -140A/B/C/R ORB LEFT WING BOT (XEBL33)

ALPHA (3) = 3.895 BETA (2) = .190 MACH = 1.3948 Q = 599.42 P = 440.18 RN/L = 2.9147

SECTION (1)LEFT WING BOT SURF DEPENDENT VARIABLE CP

2Y/BW	.2990	3640	.4270	.5340	.6730	.7800	.8870	.9720
X/CW								
.010	-.0266	-.1402	.3461	.3005	.1975	.1863	.2003	
.020	.0000	-.0546	.3508	.2182	.1754	.1104	.0514	.0620
.040		-.0267	.2279					
.050	.0128			.1044	.0540	.0872	.0483	
.069								.0377
.080				.0928				
.081			.1452					
.086		.0672						
.094	.0092							
.150				.0764	.0816	.0891	.1042	
.157								-.0772
.163		.1799						
.177			.0951					
.229	.0094							
.245		.0929						
.250				.0942	.0859	.0932	.0701	
.274			.0939					
.345								.0072
.390		.0846						
.400				.0786	.0937		.0635	
.402			.0750					
.503								-.0228
.550				.0799	.0866			
.565			-.4094					
.600							.0128	
.657		.0752						
.660						.0243		
.670								-.1476
.700					-.0176			
.725				-.0126				
.750						-.0285	-.0476	
.760			-.0424					
.775				-.1115	-.0716			
.798		-.0475						
.809			-.0894					
.834	-.0551							
.839		-.1156						
.850				-.1636	-.1922	-.1638		
.857			-.1464					
.862								-.2464
.865	-.0956							
.879		-.1661						
.900	-.1270			-.2197			-.2195	
.905			-.2213					
.919		-.2020						

```
DATE 10 FEB 76            TABULATED PRESSURE DATA - OA148 ( AMES 11-073-1 )

                                   AMES 11-073(OA148) -140A/B/C/R ORB LEFT WING BOT            (XE8L33)

ALPHA ( 3) =    3.895   BETA  ( 2) =     .190

 SECTION ( 1)LEFT WING BOT SURF             DEPENDENT VARIABLE CP

2Y/BW        .2990   .3640   .4270   .5340   .6730   .7800   .8870   .9720

  X/CW
   .950                              -.2838  -.2531  -.2658
   .953                      -.2591
   .955              -.1862
   .96[illegible]      -.1504
  1.000                      -.1164          -.1195          -.3615

ALPHA ( 3) =    3.896   BETA  ( 3) =    4.246   MACH   =  1.3948    Q      =  599.42    P      =  440.18    RN/L   =  2.9147

 SECTION ( 1)LEFT WING BOT SURF             DEPENDENT VARIABLE CP

2Y/BW        .2990   .3640   .4270   .5340   .6730   .7800   .8870   .9720

  X/CW
   .010     -.1578  -.3704   .2656   .3402   .2364   .2121   .2331
   .020      .0000  -.1840   .3005   .2657   .2055   .1500   .1176   .0053
   .040             -.1403   .2316
   .050     -.0503                   .1549   .1022   .1098   .1114
   .069                                                              .0043
   .080                              .1378
   .081                      .1499
   .086             -.0064
   .094     -.0405
   .150                              .0942   .1099   .1173   .1235
   .157                                                             -.0936
   .163              .1451
   .177                      .1031
   .229     -.0192
   .246              .0860
   .250                              .1015   .0974   .1022   .0774
   .274                      .1069
   .345                                                             -.0072
   .390              .0910
   .400                              .0977   .1182           .0865
   .422                      .0870
[illegible]                                                         [illegible]
   .500                              .0830   .0917
   .565                     -.3886
   .600                                                      .0218
   .637              .0851
   .650                                              .0317
   .670                                                             -.1703
   .700                                      -.0106
   .725                             -.0355
   .750                                             -.0455  -.0539
   .760                     -.0391
```

AMES 11-073(OA148) -140A/B/C/R ORB LEFT WING BOT (XEBL33)

ALPHA (3) = 3.896 BETA (3) = 4.246

SECTION (1)LEFT WING BOT SURF DEPENDENT VARIABLE CP

2Y/BW X/CW	.2990	.3640	.4270	.5340	.6730	.7800	.8870	.9720
.775				-.0951	-.0622			
.798		-.0412						
.808			-.0835					
.834	-.0504							
.839		-.1050						
.850				-.1523	-.1835	-.1662		
.857			-.1359					
.862								-.2713
.865	-.1008							
.879		-.1623						
.900	-.1147			-.2109			-.2294	
.905			-.2179					
.919		-.1812						
.950				-.2717	-.2296	-.2719		
.953			-.2438					
.955		-.1876						
.955	-.1582							
1.000			-.1350		-.1219		-.2202	

ALPHA (4) = 7.947 BETA (1) = -3.865 MACH = 1.3944 Q = 599.72 P = 440.65 RN/L = 2.9146

SECTION (1)LEFT WING BOT SURF DEPENDENT VARIABLE CP

2Y/BW X/CW	.2990	.3640	.4270	.5340	.6730	.7800	.8870	.9720
.010	.0075	-.1297	.4292	.5163	.4612	.5246	.5368	
.020	.0000	.0021	.4566	.3873	.4093	.4151	.4100	.1385
.040		.0410	.3553					
.050	.0904			.2839	.2820	.3209	.3610	
.069								.1538
.080				.2458				
.081			.2686					
.086		.1538						
.094	.0849							
.140				.1980	.2591	.2879	.2947	
.157								-.0342
.163		.2905						
.177			.2050					
.203	.0382							
.245		.1764						
.250				.2101	.2286	.2513	.2268	
.274			.1989					
.315								.1283
.400		.1788						

```
                              AMES 11-073(OA148) -140A/B/C/R ORB LEFT WING BOT          (XEBL33)

ALPHA ( 4) =    7.947    BETA  ( 1) =    -3.865

 SECTION ( 1)LEFT WING BOT SURF              DEPENDENT VARIABLE CP

2Y/BW        .2990   .3640   .4270   .5340   .6730   .7800   .8870   .9720

  X/CW
   .400                               .1979   .2529           .2083
   .402                       .1810
   .503                                                                .0940
   .550                               .1831   .2014
   .565                      -.4468
   .600                                                       .1222
   .637               .1625
   .650                                               .1189
   .670                                                               -.0693
   .700                                       .0654
   .725                               .0659
   .750                                               .0483   .0300
   .760                       .0246
   .775                              -.0731   .0009
   .798               .0145
   .808                      -.0221
   .834       .0022
   .839              -.0685
   .850                              -.1016  -.1373  -.0964
   .857                      -.0857
   .862                                                               -.1764
   .865      -.0398
   .879              -.1102
   .900      -.1030                  -.1674                  -.1470
   .905                      -.1707
   .919              -.1770
   .950                              -.2462  -.2072  -.2136
   .963                       .2180
   .975              -.1613
   .985      -.0742
  1.000                      -.1198          -.2594          -.3853
ALPHA ( 4) =    7.945    BETA  ( 2) =     .185   MACH  =  1.3944     Q     =  599.72    P      =  440.55    RN/L  =  2.81+6

 SECTION ( 1)LEFT WING BOT SURF              DEPENDENT VARIABLE CP

2Y/BW        .2990   .3640   .4270   .5340   .6730   .7800   .8870   .9720

  X/CW
   .010      -.1312  -.3380   .2827   .5208   .4651   .5270   .5225
   .020       .0000  -.1216   .3595   .4201   .4165   .4327   .4153   .0252
   .040              -.0707   .3245
   .050       .0230                   .3155   .2941   .3299   .3651
   .069                                                                .0647
   .080                               .2580
```

AMES 11-073(OA148) -140A/B/C/R ORB LEFT WING BOT (XEBL33)

ALPHA (4) = 7.946 BETA (2) = .185

SECTION (1)LEFT WING BOT SURF DEPENDENT VARIABLE CP

2Y/BW	.2990	.3540	.4270	.5340	.6730	.7800	.8870	.9720
X/CW								
.081			.2458					
.086		.0718						
.094	.0352							
.150				.2055	.2621	.2822	.2912	
.157								-.0547
.163		.2377						
.177			.1985					
.229	.0584							
.245		.1634						
.250				.2098	.2299	.2465	.2183	
.274			.1995					
.345								.0897
.390		.1767						
.400				.1996	.2417		.2142	
.402			.1801					
.503								.0499
.540				.1797	.1945			
.565			-.4503					
.600							.1005	
.637		.1648						
.650						.1128		
.670								-.1005
.700					.0661			
.725				.0643				
.750						.0299	.0079	
.760			.0335					
.775				-.0460	.0007			
.798		.0259						
.808			-.0121					
.834	.0203							
.839		-.0462						
.850				-.0979	-.1522	-.1114		
.857			-.0757					
.862								-.2232
.865	-.0318							
.873		-.1065						
.900	-.0748			-.1597			-.1788	
.915			-.1594					
.919		-.1512						
[illegible]				-.2376	-.2022	-.2294		
.943			-.2059					
.955		-.1412						
.975	-.0907							
1.000			-.1508		-.1899		-.4115	

AMES 11-073(OA148) -140A/B/C/R ORB LEFT WING BOT (XEB133)

ALPHA (4) = 7.944 BETA (3) = 4.238 MACH = 1.3944 Q = 599.72 P = 440.35 RN/L = 2.51+6

SECTION (1)LEFT WING BOT SURF DEPENDENT VARIABLE CP

2Y/BW	.2990	.3640	.4270	.5340	.6730	.7800	.8870	.9720
X/CW								
.010	-.2786	-.4238	.1037	.4825	.4578	5021	.5045	
.020	.0000	-.2174	.2210	.4191	.4134	.4347	.4209	-.0946
.040		-.1627	.2545					
.050	-.0527			.3203	.3045	.3328	.3646	
.069								-.0184
.080				.2650				
.081			.2009					
.086		.0044						
.094	-.0113							
.150				.2085	.2645	.2754	.2882	
.157								-.0776
.163		.1750						
.177			.1727					
229	.0254							
.246		.1357						
.250				.1979	.2285	.2477	.2316	
.274			.1857					
.345								.0408
.390		.1532						
.400				.1965	.2385		.2190	
.402			.1753					
.503								.0135
.550				.1767	.1950			
.565			-.4328					
.600							.0970	
.637		.1681						
.650						.1236		
.670								-.1260
.700					.0722			
.725				.0720				
.750						.0340	-.0008	
.760			.0318					
.775				-.0154	.0137			
.798		.0286						
.808			-.0100					
.834	.0202							
.839		-.0383						
.850				-.0846	-.1499	-.1089		
.857			-.0746					
.862								-.2428
.865	-.0400							
.879		-.1071						
.900	-.0662			-.1554			-.1785	
.905			-.1644					
.919		-.1331						

AMES 11-073(OA148) -140A/B/C/R ORB LEFT WING BOT (XEBL33)

ALPHA (4) = 7.944 BETA (3) = 4.238

SECTION (1)LEFT WING BOT SURF DEPENDENT VARIABLE CP

2Y/BW	.2990	.3640	.4270	.5340	.6730	.7800	.8870	.9720
X/CW								
.950				-.2188	-.1957	-.2247		
.953			-.1890					
.955		-.1430						
.965	-.1141							
1.000			-.1843		-.1473		-.3745	

ALPHA (5) = 11.859 BETA (1) = -3.851 MACH = 1.3955 Q = 599.73 P = 439.94 RN/L = 2.9121

SECTION (1)LEFT WING BOT SURF DEPENDENT VARIABLE CP

2Y/BW	.2990	.3640	.4270	.5340	.6730	.7800	.8870	.9720
X/CW								
.010	-.1052	-.2762	.3732	.6798	.6547	.7217	.7260	
.020	.0000	-.0347	.4777	.5733	.6002	.6263	.6456	.0748
.040		.0234	.4567					
.060	.1008			.4702	.4915	.5143	.5567	
.069								.1533
.080				.4056				
.081			.3776					
.085		.1860						
.094	.1270							
.150				.3471	.4173	.4472	.4427	
.157								.0021
.163		.3668						
.177			.3195					
.229	.1550							
.245		.2721						
.250				.3402	.3738	.4025	.3768	
.274			.3172					
.345								.1797
.390		.2950						
.400				.3237	.3792		.3541	
[illegible]			.3025					
[illegible]								.1561
[illegible]				.2861	.3097			
[illegible]			-.4602					
[illegible]							.2005	
[illegible]		.2573						
[illegible]						.2157		
[illegible]								-.0103
[illegible]					.1525			
[illegible]				.1544				
[illegible]						.1323	.0994	
[illegible]			.1093					

```
DATE 10 FEB 76          TABULATED PRESSURE DATA - [illegible] ( AMES 11-073-1 )                              PAGE 201[illegible]

                              AMES 11-073(OA[illegible]    140A/B/C/R ORB LEFT WING BOT              (XEBL[illegible])

ALPHA ( 5) =   11.859    BETA  ( 1) =   -3.851

 SECTION ( 1)LEFT WING BOT SURF           DEPENDE[illegible]  CP

2Y/BW        .2990    .3640    .4270    .5340     .673 [illegible]    8870    .9720

 X/CW
  .775                                    .0131     .077
  .798                .1059
  .808                         .0614
  .834       .0937
  .839                .0104
  .850                                   -.0304   -.0773   -.0350
  .857                        -.0092
  .862                                                                      -.1387
  .865       .0415
  .879               -.0415
  .900      -.0097                       -.1017                     -.0887
  .905                        -.1000
  .919               -.1007
  .950                                   -.1899   -.1387   -.1617
  .953                        -.1529
  .955               -.0877
  .965      -.0204
 1.000                        -.2419            -.2945            -.4596
ALPHA ( 5) =   11.855    BETA  ( 2) =     .189   MACH   =  1.3955     Q      =  599.73     P      =  439.94     RN/L   =  2.912[illegible]

 SECTION ( 1)LEFT WING BOT SURF           DEPENDENT VARIABLE CP

2Y/BW        .2990    .3640    .4270    .5340    .6730    .7600    .8870    .9720

 X/CW
  .010      -.2430   -.3762    .1939    .6211    .6115    .6620    .6621
  .020       .0000   -.1385    .3279    .5447    .5694    .5952    .6037   -.0709
  .040               -.0775    .3746
  .050       .0281                      .4564    .4726    .4957    .5305
  .069                                                                       .0470
  .080                                  .3886
  .081                         .3185
  .086                .1071
  .094       .0753
  .150                                  .3400    .3997    .4229    .4318
  .157                                                                      -.0423
  .163                .2986
  .177                         .2922
  .229       .1186
  .246                .2347
  .250                                  .3221    .3575    .3864    .3652
  .274                         .3022
  .345                                                                       .1199
  .390                .2733
```

```
DATE 10 FEB 76            TABULATED PRESSURE DATA - OA148 ( AMES 11-073-1 )                                   PAGE 2011

                                   AMES 11-073(OA148) -140A/B/C/R ORB LEFT WING BOT              (XEBL33)

ALPHA ( 5) =   11.865    BETA  ( 2) =     .189

 SECTION ( 1)LEFT WING BOT SURF                  DEPENDENT VARIABLE CP

2Y/BW       .2990   .3640   .4270   .5340   .6730   .7800   .8870   .9720

  X/CW
   .400                              .3136   .3653            .3287
   .402                     .2856
   .503                                                                .0960
   .550                              .2778   .2982
   .565                    -.4543
   600                                                        .1747
   .637             .2600
   .650                                               .2041
   .670                                                               -.0582
   .700                                       .1458
   .725                              .1517
   .750                                               .1130   .0755
   .760                     .1107
   .775                              .0434   .0832
   .798             .1088
   .808                     .0766
   .834     .0999
   .839             .0398
   .850                             -.0168  -.0934  -.0425
   .857                     .0039
   .862                                                               -.1837
   .865     .0367
   .879            -.0359
   .900     .0031                   -.0917                   -.1169
   .905                    -.0948
   .919            -.0758
   .950                             -.1742  -.1558  -.1710
   .953                    -.1423
   .955            -.0912
   .955    -.0450
  1.030                    -.1797           -.2565           -.4792
ALPHA ( 5) =   11.860    BETA  ( 3) =    4.253   MACH   =  1.3955    Q      =  599.73    P      =  439.94    RN/L   =  2.9121

 SECTION ( 1)LEFT WING BOT SURF                  DEPENDENT VARIABLE CP

2Y/BW       .2990   .3640   .4270   .5340   .6730   .7800   .8870   .9720

  X/CW
   .010    -.3420  -.4323   .0015   .5283   .5411   .5725   .5767
   .020     .0000  -.2301   .1772   .4950   .5242   .5472   .5531  -.1944
   .040            -.1682   .2872
   .050    -.0440                   .4174   .4460   .4615   .4954
   .069                                                               -.0511
   .080                             .3598
```

AMES 11-073(OA148) -140A/B/C/R ORB LEFT WING BOT (XE8L33)

ALPHA (5) = 11.860 BETA (3) = 4.253

SECTION (1)LEFT WING BOT SURF DEPENDENT VARIABLE CP

2Y/BW	.2990	.3640	.4270	.5340	.6730	.7800	.8870	.9720
X/CW								
.081			.2528					
.086		.0293						
.094	.0205							
.150				.3187	.3754	.4024	.4193	
.157								-.0783
.163		.2301						
.177			.2476					
.229	.0742							
.246		.1951						
.250				.2995	.3380	.3709	.3522	
.274			.2766					
.345								.0768
.390		.2421						
.400				.2998	.3522		.3117	
.402			.2717					
.503								.0571
.550				.2685	.2881			
.565			-.4351					
.600							.1742	
.637		.2528						
.650						.1947		
.670								-.0763
.700					.1446			
.725				.1446				
.750						.0929	.0494	
.760			.0995					
.775				.0652	.0753			
.798		.0982						
.808			.0676					
.834	.0902							
.839		.0307						
.850				-.0072	-.1080	-.0499		
.857			-.0009					
.862								-.1973
.865	.0203							
.879		-.0408						
.900	.0078			-.0916			-.1227	
.905			-.0970					
.919		-.0643						
.950				-.1597	-.1515	-.1573		
.953			-.1140					
.955		-.0934						
.965	-.0692							
1.000			-.2427		-.1468		-.4690	

```
                         AMES 11-073(OA148) -140A/B/C/R ORB LEFT WING BOT              (XEBL33)

ALPHA ( 6) =    15.849   BETA  ( 1) =   -3.830   MACH  =  1.3950    Q    =  599.93    P    =  440.41    RN/L  =  2.9147

 SECTION ( 1)LEFT WING BOT SURF              DEPENDENT VARIABLE CP

2Y/BW      .2990    3640   .4270   .5340   .6730   .7800   .8870   .9720

  X/CW
    .010  -.1993  -.3161   .2950   .7630   .7740   .8025   .7913
    .020   .0000  -.0433   .4389   .6972   .7401   .7676   .7723  -.0151
    .040           .0251   .5172
    .050   .1213                   .6071   .6454   .6778   .7063
    .069                                                           .1360
    .080                           .5435
    .091                   .4629
    .086           .2301
    .094   .1776
    .150                           .4947   .5555   .6007   .5811
    .157                                                           .0013
    .163           .4445
    .177                   .4294
    .229   .2239
    .246           .3595
    .250                           .4600   .5169   .5_.    .5055
    .274                   .4355
    .345                                                           .2320
    .390           .4107
    .400                           .4558   .5115           .4577
    .402                   .4176
    .503                                                           .2067
    .550                           .4098   .4171
    .565                  -.4762
    .600                                                   .2967
    .637           .3727
    .650                                           .3097
    .670                                                           .0374
    .700                                   .2431
    .725                           .2497
    .750                                           .2029   .1554
    .760                   .1968
    .775                           .1168   .1492
    .793           .2058
    .806                   .1508
    .834   .1953
    .839           .0954
    .850                           .0451  -.0239   .0256
    .857                   .0738
    .862                                                          -.1004
    .865   .1256
    .879           .0182
    .900   .0432                  -.0353                  -.0342
    .905                  -.0377
    .919          -.0348
```

AMES 11-073(OA148) -140A/B/C/R ORB LEFT WING BOT (XEBL33)

ALPHA (6) = 15.849 BETA (1) = -3.830

SECTION (1)LEFT WING BOT SURF DEPENDENT VARIABLE CP

2Y/BW	.2990	.3640	.4270	.5340	.6730	.7800	.8870	.9720
X/CW								
.950				-.1287	-.0956	-.1070		
.953			-.1038					
.955		-.0549						
.965	.0039							
1.000			-.2242		-.3638		-.5339	

ALPHA (6) = 15.859 BETA (2) = .186 MACH = 1.3950 Q = 599.93 P = 440.41 RN/L = 2.9147

SECTION (1)LEFT WING BOT SURF DEPENDENT VARIABLE CP

2Y/BW	.2990	.3640	.4270	.5340	.6730	.7800	.8870	.9720
X/CW								
.010	-.3012	-.3905	.1031	.6589	.6917	.6907	.6824	
.020	.0000	-.1498	.2986	.6343	.6772	.6962	.6917	-.1443
.040		-.0789	.4258					
.050	.1499			.5652	.6117	.6306	.6526	
.069								.0267
.080				.5164				
.081			.3908					
.086		.1397						
.094	.1095							
.150				.4700	.5297	.5707	.5415	
.157								-.0419
.163		.3667						
.177			.3937					
.229	.1771							
.246		.3201						
.250				.4401	.4906	.5348	.4757	
.274			.4135					
.345								.1659
.390		.3790						
.400				.4354	.4913		.4254	
.402			.4079					
.503								.1606
.550				.4086	.4047			
.555			-.4932					
.630							.2749	
.637		.3719						
.650						.2922		
.670								.0092
.700					.2522			
.725				.2470				
.750						.1923	.1339	
.760			.2017					

```
                    AMES 11-073(OA148) -140A/B/C/R ORB LEFT WING BOT          (XEBL33)

ALPHA ( 6) =   15.859   BETA  ( 2) =     .186

 SECTION ( 1)LEFT WING BOT SURF            DEPENDENT VARIABLE CP

2Y/BW      .2990   .3640   .4270   .5340   .6730   .7800   .8870   .9720

  X/CW
   .775                                .1632   .1551
   .798            .2115
   .808                    .1591
   .834    .1965
   .839            .1127
   .850                                .0614  -.0391   .0164
   .857                    .0716
   .862                                                               -.1289
   .865    .1165
   .879            .0222
   .900    .0759                      -.0325                  -.0558
   .905                   -.0407
   .919           -.0067
   .950                               -.1185  -.0886  -.0945
   .953                   -.0733
   .955           -.0369
   .965   -.0076
  1.000                   -.3015              -.3067          -.5515
ALPHA ( 6) =   15.851   BETA  ( 3) =   4.283  MACH  =  1.3950   Q    =  599.93   P    =  440.41   RN/L  =  2.9147

 SECTION ( 1)LEFT WING BOT SURF            DEPENDENT VARIABLE CP

2Y/BW      .2990   .3640   .4270   .5340   .6730   .7800   .8870   .9720

  X/CW
   .010   -.3706  -.4624  -.0791   .5327   .5752   .5698   .5500
   .020    .0000  -.2375   .1463   .5479   .5983   .6194   .6061  -.2403
   .040           -.1679   .3235
   .050   -.0211                   .5058   .5627   .5769   .5950
   .069                                                           -.0534
   .080                            .4645
   .081                    .3201
   .086            .0657
   .094    .0545
   .150                            .4269   .4951   .5375   .5158
   .157                                                           -.0784
   .163            .2987
   .177                    .3421
   .229    .1307
   .246            .2702
   .250                            .4097   .4696   .5052   .4624
   .274                    .3867
   .345                                                            .1164
   .390            .3477
```

```
DATE 10 FEB 76              TABULATED PRESSURE DATA - OA148 ( AMES 11-073-1 )                                   PAGE 2016

                                      AMES 11-073(OA148) -140A/B/C/R ORB LEFT WING BOT                (XE8L33)
ALPHA ( 6) =    15.851    BETA  ( 3) =    4.283
 SECTION ( 1)LEFT WING BOT SURF               DEPENDENT VARIABLE CP

2Y/BW        .2990    .3640    .4270    .5340    .6730    .7800    .8870    .9720

 X/CW
   .400                                  .4177    .4614             .4077
   .402                         .3848
   .503                                                                      .1102
   .550                                  .3780    .3931
   .565                        -.4661
   .600                                                             .2543
   .637               .3539
   .650                                                    .2777
   .670                                                                     -.0083
   .700                                           .2437
   .725                                  .2413
   .750                                                    .1760    .1255
   .760                         .1949
   .775                                  .1653    .1511
   .798               .2003
   .808                         .1595
   .834      .1819
   .839               .1132
   .850                                  .0639   -.0595    .0039
   .857                         .0742
   .862                                                                     -.1447
   .865      .1055
   .879               .0407
   .900      .0951                      -.0371                     -.0640
   .905                        -.0265
   .919               .0079
   .950                                 -.1104   -.0864   -.0926
   .953                        -.0480
   .955              -.0357
   .965     -.0111
  1.000                        -.2588            -.2557            -.5141
```

```
DATE 10 FEB 76           TABULATED PRESSURE DATA - OA148 ( AMES 11-073-1 )

                              AMES 11-073(OA148) -140A/B/C/R ORB LEFT WING BOT              (XEBL34)    ( 05 AUG 75  )

             REFERENCE DATA                                                                 PARAMETRIC DATA

SREF  =  2690.0000 SQ.FT.    XMRP  =  1076.6800 IN. XO                          RUDDER =    10.000   SPDBRK =    35.000
LREF  =   474.8000 IN.       YMRP  =      .0000 IN. YO                          BDFLAP =    16.300   L-ELVN =      .000
BREF  =   936.0680 IN.       ZMRP  =   375.0000 IN. ZO                          R-ELVN =    10.000   MACH   =     1.250
SCALE =      .0300

ALPHA ( 1) =   -4.064    BETA  ( 1) =   -3.845   MACH   =  1.2480     Q     =  600.05     P     =  550.40     RN/L  =  3.0174

 SECTION ( 1)LEFT WING BOT SURF              DEPENDENT VARIABLE CP

2Y/BW        .2990    .3640    .4270    .5340    .6730    .7800    .8870    .9720

 X/CW
   .010     -.1543   -.2862   -.2046   -.4029   -.5026   -.3528   -.3232
   .020      .0000   -.2723   -.3156   -.5503   -.5462   -.5585   -.5594   -.5987
   .040              -.2631   -.3318
   .050     -.1468                     -.5742   -.5741   -.5927   -.5892
   .059                                                                   -.6519
   .080                                -.5378
   .081                       -.2391
   .086              -.1507
   .094     -.1489
   .150                                -.4977   -.5096   -.5235   -.5343
   .157                                                                   -.3940
   .163              -.0601
   .177                       -.2173
   .229     -.1296
   .245              -.1439
   .250                                -.2431   -.4607   -.4749   -.4951
   .274                       -.1951
   .345                                                                   -.5570
   .390              -.1644
   .400                                -.2036   -.2972            -.4398
   .402                       -.1682
   .503                                                                   -.5515
   .550                                -.1475   -.1781
   .565                       -.3739
   .600                                                           -.4204
   .637              -.1122
   .650                                                  -.2373
   .677                                                                   -.6029
   .700                                         -.2225
   .725                                -.1919
   .740                                                  -.2278   -.4587
   .750                       -.2152
   .775                                -.2585   -.2636
   .798              -.1952
   .803                       -.2938
   .834     -.2135
   .839              -.2884
   .850                                -.3508   -.2327   -.3301
```

```
DATE 10 FEB 76            TABULATED PRESSURE DATA - OA148 ( AMES 11-073-1 )                                        PAGE 2018

                                   AMES 11-073(OA148) -140A/B/C/R ORB LEFT WING BOT                (XEBL34)

ALPHA ( 1) =   -4.064    BETA  ( 1) =   -3.845

 SECTION ( 1)LEFT WING BOT SURF               DEPENDENT VARIABLE CP

2Y/BW        .2990   .3640   .4270   .5340   .6730   .7800   .8870   .9720

  X/CW
    .857                     -.3160
    .862                                                             -.5704
    .865   -.2753
    .879           -.3276
    .900   -.2349                    -.3881                  -.4851
    .905                     -.4079
    .919           -.3342
    .950                             -.4053  -.4113  -.4038
    .953                     -.4209
    .955           -.3458
    .965   -.3341
   1.000                     -.1026          -.2235          -.2004
ALPHA ( 1) =   -4.041    BETA  ( 2) =     .192   MACH   =  1.2480     Q      =  600.05     P      =  550.40     RN/L   =  3.0174
 SECTION ( 1)LEFT WING BOT SURF               DEPENDENT VARIABLE CP

2Y/BW        .2990   .3640   .4270   .5340   .6730   .7800   .8870   .9720

  X/CW
    .010   -.0965  -.1324  -.0876  -.4013  -.5282  -.3912  -.3754
    .020    .0000  -.1376  -.1487  -.5486  -.5640  -.5896  -.5897  -.6559
    .040           -.1326  -.2018
    .050   -.1108                    -.5228  -.5834  -.6191  -.6186
    .069                                                             -.6809
    .080                             -.4959
    .081                     -.1881
    .086           -.0679
    .094   -.1127
    .150                             -.2895  -.5078  -.5423  -.5661
    .157                                                             -.4148
    .163           -.0026
    .177                     -.1643
    .229   -.0857
    .245           -.0960
    .250                             -.1823  -.3938  -.4689  -.5226
    .274                     -.1376
    .345                                                             -.6013
    .333           -.1024
    .400                             -.1398  -.1671          -.4623
    .482                     -.1124
    .503                                                             -.4601
    .550                             -.1159  -.1357
    .565                     -.3992
    .600                                                     -.3330
```

```
                                   AMES 11-073(OA148) -140A/B/C/R ORB LEFT WING BOT               (XEBL34)
ALPHA ( 1) =   -4.041    BETA  ( 2) =     .192
 SECTION ( 1)LEFT WING BOT SURF                    DEPENDENT VARIABLE CP
2Y/BW        .2990    .3640    .4270    .5340    .6730    .7300    .8870    .9720
  X/CW
    .637             -.0849
    .650
    .670                                                 -.1804
    .700                                                                   -.6083
    .725                                         -.1990
    .750                                -.1799
    .760                                                 -.2120   -.2534
    .775                       -.2098
    .798                                -.2592   -.2624
    .808             -.1885
    .834    -.2022             -.2866
    .839             -.2760
    .850
    .857                                -.3424   -.2340   -.3194
    .862                       -.3052
    .865    -.2584                                                         -.5115
    .879             -.3168
    .900    -.2378                      -.3975
    .905                       -.3975                              -.3510
    .919             -.3314
    .950
    .953                                -.4209   -.3830   -.3964
    .955                       -.4124
    .965    -.3691   -.3507
   1.000                       -.1279            -.2548            -.1335
ALPHA ( 1) =   -4.051    BETA  ( 3) =    4.275  MACH   =  1.2480    Q      =  600.05     P      =  550.40    RN/L   =  3.0174
 SECTION ( 1)LEFT WING BOT SURF                    DEPENDENT VARIABLE CP
2Y/BW        .2990    .3640    .4270    .5340    .6730    .7800    .8870    .9720
  X/CW
    .010    -.0899   -.0461    .0142   -.3913   -.5404   -.4258   -.4191
    .020     .0000   -.0603    .0002   -.5305   -.5732   -.6118   -.6132   -.6905
    .040             -.0503   -.0954
    .050    -.1042                      -.4507   -.5858   -.6355   -.6395
    .069                                                                   -.6860
    .080                                -.3807
    .081                       -.1122
    .085             -.0125
    .094    -.0951
    .150
    .157                                -.2091   -.4727   -.5473   -.5732
    .163              .0584                                                -.4219
```

AMES 11-073(OA148) -140A/B/C/R ORB LEFT WING BOT (XE6_34)

ALPHA (1) = -4.051 BETA (3) = 4.275

SECTION (1)LEFT WING BOT SURF DEPENDENT VARIABLE CP

2Y/BW	.2990	.3640	.4270	.5340	.6730	.7800	.8870	.9720
X/CW								
.177			-.1122					
.229	-.0632							
.246		-.0447						
.250				-.1416	-.1874	-.4168	-.5349	
.274			-.0895					
.345								-.6281
.390		-.0607						
.400				-.1035	-.1298		-.3655	
.402			-.0842					
.503								-.5421
.550				-.0975	-.1137			
.565			-.3676					
.600							-.1596	
.637		-.0763						
.650						-.1654		
.670								-.2893
.700					-.1867			
.725				-.1814				
.750						-.2142	-.2255	
.760			-.2084					
.775				-.2586	-.2545			
.798		-.1852						
.808			-.2834					
.834	-.2091							
.839		-.2706						
.850				-.3412	-.2502	-.3227		
.857			-.3040					
.862								-.3194
.865	-.2595							
.879		-.3124						
.900	-.2460			-.4000			-.3425	
.905			-.3918					
.919		-.3290						
.950				-.4379	-.3743	-.3964		
.953			-.4048					
.955		-.3443						
.965	-.3874							
1.000			-.1469		-.2796		-.1601	

DATE 10 FEB 76 TABULATED PRESSURE DATA - OA148 (AMES 11-073-1)

AMES 11-073(OA148) -140A/B/C/R ORB LEFT WING BOT (XEBL34)

ALPHA (2) = -.032 BETA (1) = -3.867 MACH = 1.2476 Q = 600.19 P = 550.87 RN/L = 3.0137

SECTION (1)LEFT WING BOT SURF DEPENDENT VARIABLE CP

2Y/BW	.2990	.3640	.4270	.5340	.6730	.7800	.8870	.9720
X/CW								
.010	.0030	.0127	.2031	-.1824	-.2922	-.2157	-.1305	
.020	.0000	-.0196	.1717	-.3273	-.3500	-.3613	-.3881	-.3311
.040		-.0199	-.0133					
.050	-.0297			-.2476	-.3349	-.3786	-.3971	
.063								-.3597
.080				-.2136				
.091			-.0549					
.085		.0203						
.094	-.0551							
.150				-.1424	-.2318	-.2759	-.3198	
.157								-.2377
.163		.0836						
.177			-.0656					
.229	-.0587							
.246		-.0307						
.250				-.0862	-.0984	-.2033	-.2672	
.274			-.0606					
.345								-.2195
.390		-.0439						
.400				-.0656	-.0733		-.1456	
.402			-.0533					
.503								-.1618
.550				-.0392	-.0510			
.565			-.4387					
.600							-.1116	
.637		-.0251						
.650						-.1014		
.670								-.2495
.700					-.1310			
.725				-.1150				
.750						-.1411	-.1814	
.760			-.1414					
.775				-.1933	-.2003			
.793		-.1289						
.808			-.2182					
.834	-.1508							
[illegible]		-.2231						
.850				-.2832	-.2410	-.2747		
.857			-.2530					
[illegible]								-.3408
[illegible]	-.2011							
.879		-.2734						
[illegible]	-.1740			-.3431			-.3290	
[illegible]			-.3456					
.919		-.2259						

```
                                   AMES 11-073(OA148) -140A/B/C/R ORB LEFT WING BOT              (XE5L3-)

ALPHA ( 2) =    -.032    BETA  ( 1) =   -3.867

 SECTION ( 1)LEFT WING BOT SURF              DEPENDENT VARIABLE CP

2Y/BW        .2990   .3640   .4270   .5340   .6730   .7800   .8870   .9720

  X/CW
    .950                            -.3788  -.2801  -.3748
    .953                    -.3794
    .955            -.2817
    .955    -.2701
   1.000                    -.0596          -.1916          -.2206

ALPHA ( 2) =    -.029    BETA  ( 2) =     .184   MACH   =  1.2476     Q     =  503.19     P     =  550.87     RN/L   =  3.0137

 SECTION ( 1)LEFT WING BOT SURF              DEPENDENT VARIABLE CP

2Y/BW        .2990   .3640   .4270   .5340   .6730   .7800   .8870   .9720

  X/CW
    .010    -.0379   .0065   .2582  -.1671  -.3094  -.2517  -.1807
    .020     .0000  -.0045   .2259  -.2017  -.3026  -.3767  -.4194  -.3348
    .040             .0059   .0487
    .050    -.0479                  -.1746  -.2838  -.3656  -.4228
    .063                                                            -.3279
    .080                            -.1499
    .081                    -.0015
    .085             .0459
    .094    -.0654
    .150                            -.1046  -.1572  -.2430  -.3234
    .157                                                            -.2245
    .163             .1134
    .177                    -.0386
    .229    -.0440
    .246            -.0012
    .250                            -.0542  -.0819  -.0844  -.1365
    .274                    -.0308
    .345                                                            -.1063
    .390            -.0147
    .400                            -.0273  -.0293          -.0833
    .402                    -.0157
    .503                                                            -.1353
    .550                            -.0176  -.0274
    .565                    -.4684
    .600                                                    -.0902
    .637            -.0345
    .650                                            -.0837
    .670                                                            -.2377
    .700                                    -.1176
    .725                            -.1070
    .750                                            -.1354  -.1728
    .760                    -.1384
```

```
DATE 10 FEB 76              TABULATED PRESSURE DATA - OA148 ( AMES 11-073-1 )

                                   AMES 11-073(OA148) -140A/B/C/R ORB LEFT WING BOT                    (XEBL34)
ALPHA ( 2) =     -.029    BETA  ( 2) =     .184

 SECTION ( 1)LEFT WING BOT SURF                      DEPENDENT VARIABLE CP

2Y/BW        .2990   .3640   .4270   .5340   .6730   .7800   .8870   .9720

  X/CW
    .775                             -.1905  -.1877
    .798             -.1312
    .808                     -.2120
    .834    -.1437
    .839             -.2149
    .850                             -.2785  -.2441  -.2701
    .857                     -.2448
    .862                                                             -.3290
    .865    -.2029
    .879             -.2686
    .900    -.1794                   -.3420                  -.3253
    .905                     -.3417
    .919             -.2755
    .950                             -.3858  -.2972  -.3734
    .953                     -.3686
    .955             -.2853
    .965    -.2968
   1.000                     -.0938          -.2111          -.1256
ALPHA ( 2) -     -.035    BETA  ( 3) =    4.251   MACH   =  1.2476     Q      =  600.19     P      =  550.87     RN/L   =  3.0137

 SECTION ( 1)LEFT WING BOT SURF                      DEPENDENT VARIABLE CP

2Y/BW        .2990   .3640   .4270   .5340   .6730   .7800   .8870   .9720

  X/CW
    .010    -.1164  -.0560   .2860  -.0618  -.2716  -.2693  -.2053
    .020     .0000  -.0329   .2604  -.0634  -.1885  -.3551  -.4244  -.2006
    .040            -.0152   .1114
    .060    -.0812                  -.1118  -.2306  -.2793  -.3516
    .069                                                            -.1942
    .080                            -.0816
    .081                     .0493
    .086             .0507
    .094    -.0875
    .150                            -.0641  -.0915  -.1044  -.1347
    .157                                                            -.1512
    .163             .1268
    .177                     .0009
    .229    -.0527
    .246             .0351
    .250                            -.0174  -.0449  -.0606  -.0919
    .274                     .0103
    .345                                                            -.1013
    .390             .0207
```

AMES 11-073(OA148) -140A/B/C/R ORB LEFT WING BOT (XEBL34)

ALPHA (2) = -.035 BETA (3) = 4.251

SECTION (1)LEFT WING BOT SURF DEPENDENT VARIABLE CP

2Y/BW	.2990	.3640	.4270	.5340	.6730	.7800	.8870	.9720
X/CW								
.400				-.0015	.0031		-.0628	
.402			.0089					
.503								-.1196
.550				-.0070	-.0129			
.565			-.4254					
.600							-.0883	
.637		.0018						
.650						-.0765		
.670								-.2511
.700					-.1116			
.725				-.1070				
.750						-.1398	-.1819	
.760			-.1396					
.775				-.1923	-.1842			
.798		-.1267						
.808			-.2084					
.834	-.1418							
.839		-.2050						
.850				-.2773	-.2222	-.2786		
.857			-.2398					
.862								-.3509
.865	-.2051							
.879		-.2593						
.900	-.1881			-.3409			-.3417	
.905			-.3366					
.919		-.2697						
.950				-.3968	-.2939	-.3707		
.953			-.3520					
.955		-.2807						
.965	-.3069							
1.000			-.1231		-.2485		-.1330	

ALPHA (3) = 3.925 BETA (1) = -3.871 MACH = 1.2463 Q = 593.48 P = 551.33 RN/L = 3.[illegible]

SECTION (1)LEFT WING BOT SURF DEPENDENT VARIABLE CP

2Y/BW	.2990	.3640	.4270	.5340	.6730	.7800	.8870	.9720
X/CW								
.010	.0403	-.0417	.4299	.2426	.1336	.1436	.1629	
.020	.0000	.0011	.3946	.1304	.1185	.0614	.0048	.0761
.040		.0238	.2190					
.050	.0430			.0525	.0100	.0359	.0226	
.069								.0342
.080				.0487				

```
                                        AMES 11-073(OA148) -140A/B/C/R ORB LEFT WING BOT            (XEBL34)

ALPHA ( 3) =     3.926    BETA  ( 1) =    -3.871

 SECTION ( 1)LEFT WING BOT SURF             DEPENDENT VARIABLE CP

2Y/BW          .2990     .3640     .4270     .5340     .6730     .7800     .8870     .9720

  X/CW
    .0P                            .1353
    .086                 .0968
    .094       .0167
    .150                                     .0374     .0539     .0801     .0839
    .157                                                                            -.0874
    .163                 .2078
    .177                           .0772
    .229      -.0020
    .246                 .0802
    .250                                     .0741     .0650     .0806     .0449
    .274                           .0798
    .345                                                                             .0103
    .390                 .0743
    .400                                     .0760     .1031               .0565
    .402                           .0663
    .503                                                                            -.0249
    .550                                     .0716     .0834
    .565                          -.4845
    .600                                                                  -.0065
    .637                 .0725
    .650                                                         .0056
    .670                                                                            -.1793
    .700                                              -.0460
    .725                                    -.0384
    .750                                                        -.0471    -.0945
    .760                          -.0635
    .775                                    -.1423    -.1160
    .798                -.0640
    .808                          -.1320
    .834      -.0738
    .839                -.1575
    .850                                    -.2142    -.2451    -.2252
    .857                          -.1824
    .862                                                                            -.2809
    .865      -.1232
    .879                -.2141
    .900      -.1419                        -.2838                        -.2716
    .905                          -.2793
    .919                -.2457
    .950                                    -.3564    -.2695    -.3468
    .953                          -.3292
    .955                -.2219
    .965      -.1951
   1.000                          -.0363              -.0982              -.2931
```

AMES 11-073(OA148) -140A/B/C/R ORB LEFT WING BOT (XEBL34)

ALPHA (3) = 3.924 BETA (2) = .180 MACH = 1.2463 Q = 599.48 P = 551.33 RN/L = 3.0145

SECTION (1)LEFT WING BOT SURF DEPENDENT VARIABLE CP

2Y/BW	.2900	.3640	.4270	.5340	.6730	.7800	.8870	.9720
X/CW								
.010	-.0814	-.2273	.3658	.2941	.1673	.1636	.1938	
.020	.0000	-.1044	.3689	.1793	.1432	.0965	.0592	.0271
.040		-.0666	.2475					
.050	-.0195			.1121	.0426	.0721	.0620	
.069								.0070
.080				.0927				
.091			.1538					
.085		.0646						
.094	-.0233							
.150				.0614	.0977	.0979	.0882	
.157								-.0972
.163		.2008						
.177			.0878					
.229	-.0224							
.246		.0895						
.250				.0916	.0827	.0875	.0467	
.274			.1027					
.345								-.0062
.390		.0890						
.400				.0956	.1159		.0744	
.402			.0899					
.503								-.0423
.550				.0898	.0953			
.565			-.5283					
.600							-.0117	
.637		.0880						
.650						.0082		
.670								-.2031
.700					-.0428			
.725				-.0267				
.750						-.0557	-.0984	
.760			-.0650					
.775				-.1294	-.1084			
.798		-.0632						
.809			-.1213					
.834	-.0730							
.839		-.1465						
.850				-.2120	-.2453	-.2262		
.857			-.1800					
.862								-.3108
.868	-.1350							
.879		-.2146						
.900	-.1468			-.2786			-.2835	
.905			-.2799					
.919		-.2351						

```
                                      AMES 11-073(OA148) -140A/B/C/R ORB LEFT WING BOT               (XEBL34)

ALPHA ( 3) =     3 924    BETA  ( 2) =      .180

 SECTION ( 1)LEFT WING BOT SURF            DEPENDENT VARIABLE CP

2Y/BW        .2990   .3640   .4270   .5340   .6730   .7800   .8870   .9720

  X/CW
    .950                             -.3539  -.2674  -.3401
    .953                     -.3217
    .955             -.2285
    .965     -.1960
   1.000                     -.0870          -.1058          -.2502
ALPHA ( 3) =     3.934    BETA  ( 3) =     4.244  MACH   =  1.2463      Q      =  599.48      P      =  551.33      RN/L   =  3.0145

 SECTION ( 1)LEFT WING BOT SURF            DEPENDENT VARIABLE CP

2Y/BW        .2990   .3640   .4270   .5340   .6730   .7800   .8870   .9720

  X/CW
    .010     -.2385  -.3695   .2806   .3380   .2023   .2216   .2387
    .020      .0000  -.2134   .3161   .2343   .1714   .1638   .1159  -.0405
    .040             -.1650   .2615
    .050     -.0899                   .1625   .0842   .1054   .1135
    069                                                              -.0279
    .080                              .1306
    .081                      .1721
    .086              .0129
    .094     -.0722
    .150                              .0997   .1174   .1101    1063
    .157                                                             -.1074
    .163              .1787
    .177                      .1107
    .229     -.0583
    .246              .0988
    .250                              .1090   .0962   .1047   .0680
    .274                      .1142
    .345                                                             -.0428
    .390              .1064
    .400                              .1152   .1423           .0924
    .402                      .1064
    .503                                                             -.0802
    .550                              .0938   .0983
    .565                     -.4699
    .600                                                     -.0216
    .637              .0927
    .650                                              .0052
    .670                                                             -.2311
    .700                                     -.0457
    .725                             -.0280
    .750                                             -.0781  -.1083
    .760                     -.0676
```

AMES 11-073(OA148) -140A/B/C/R ORB LEFT WING BOT (XEBL34)

ALPHA (3) = 3.934 BETA (3) = 4.244

SECTION (1)LEFT WING BOT SURF DEPENDENT VARIABLE CP

2Y/BW	.2990	.3640	.4270	.5340	.6730	.7800	.8870	.9720
X/CW								
.775				-.1242	-.1095			
.798		-.0621						
.808			-.1212					
.834	-.0734							
.839		-.1371						
.850				-.2053	-.2509	-.2336		
.857			-.1763					
.862								-.3511
.865	-.1438							
.879		-.2039						
.900	-.1407			-.2798			-.3093	
.905			-.2784					
.919		-.2181						
.950				-.3507	-.2871	-.3452		
.953			-.2950					
.955		-.2252						
.965	-.2057							
1.000			-.1397		-.1360		-.2246	

ALPHA (4) = 7.988 BETA (1) = -3.866 MACH = 1.2474 Q = 600.07 P = 550.87 RN/L = 3.3135

SECTION (1)LEFT WING BOT SURF DEPENDENT VARIABLE CP

2Y/BW	.2990	.3640	.4270	.5340	.6730	.7800	.8870	.9720
X/CW								
.010	-.0331	-.2389	.3992	.5497	.4887	.5746	.5774	
.020	.0000	-.0618	.4547	.4176	.4331	.4494	.4694	.0852
.040		-.0157	.3763					
.050	.0710			.3161	.3211	.3484	.3929	
.069								.1259
.080				.2603				
.081			.2764					
.086		.1293						
.094	.0690							
.150				.2185	.2802	.3056	.2961	
.157								-.0453
.163		.2936						
.177			.2091					
.229	.0572							
.246		.1795						
.250				.2223	.2381	.2789	.2387	
.274			.2070					
.345								.0841
.390		.1909						

```
DATE 10 FEB 76            TABULATED PRESSURE DATA - OA148 ( AMES 11-073-1 )                                    PAGE 2029

                                   AMES 11-073(OA148) -140A/B/C/R ORB LEFT WING BOT                    (XEBL34)

ALPHA ( 4) =    7.988    BETA  ( 1) =   -3.866

 SECTION ( 1)LEFT WING BOT SURF              DEPENDENT VARIABLE CP

2Y/BW       .2990   .3640   .4270   .5340   .6730   .7800   .8870   .9720

  X/CW
    .400                            .2212   .2918           .2283
    .402                    .2041
    .503                                                            .0472
    .550                            .2017   .1886
    .565                   -.5242
    .600                                                    .0718
    .637            .1729
    .650                                            .1001
    .670                                                           -.1218
    .700                                    .0294
    .725                            .0491
    .750                                            .0058  -.0332
    .760                    .0086
    .775                           -.0743  -.0487
    .798            .0096
    .808                   -.0526
    .834    .0064
    .839           -.0879
    .850                           -.1514  -.2136  -.1754
    .857                   -.1098
    .862                                                           -.2511
    .865   -.0545
    .879           -.1582
    .900   -.1024                  -.2310                  -.2231
    .905                   -.2193
    .919           -.1950
    .950                           -.3185  -.2610  -.3059
    .953                   -.2812
    .955           -.1806
    .965   -.1173
   1.000                   -.0897          -.2349          -.4742
ALPHA ( 4) =    7.987   BETA  ( 2) =    .186   MACH   =  1.2474    Q     =  600.07    P     =  550.87    RN/L   =  3.0135

 SECTION ( 1)LEFT WING BOT SURF              DEPENDENT VARIABLE CP

2Y/BW       .2990   .3640   .4270   .5340   .6730   .7800   .8870   .9720

  X/CW
    .010   -.2199  -.4613   .2228   .5487   .4984   .5520   .5590
    .020    .0000  -.2043   .3357   .4381   .4420   .4533   .4631  -.0433
    .040           -.1426   .3272
    .050   -.0220                   .3474   .3387   .3515   .3893
    .059                                                            .0210
    .080                            .2885
```

```
DATE 10 FEB 76              TABULATED PRESSURE DATA - OA148 ( AMES 11-073-1 )                                PAGE 2030

                                  AMES 11-073(OA148) -140A/B/C/R ORB LEFT WING BOT              (XEBL34)

ALPHA ( 4) =     7.987    BETA  ( 2) =      .186

 SECTION ( 1)LEFT WING BOT SURF             DEPENDENT VARIABLE CP

2Y/BW       .2990     .3640     .4270     .5340     .6730     .7800     .8870     .9720

  X/CW
   .081                         .2509
   .086               .0376
   .094     .0069
   .150                                   .2474     .2838     .3077     .2996
   .157                                                                          -.0736
   .163               .2386
   .177                         .2075
   .229     .0275
   .246               .1519
   .250                                   .2291     .2514     .2834     .2336
   .274                         .2186
   .345                                                                           .0336
   .390               .2016
   .400                                   .2346     .2892               .2142
   .402                         .2124
   .503                                                                           .0016
   .550                                   .2102     .1991
   .565                        -.5624
   .600                                                                 .0598
   .637               .1919
   .650                                                       .0917
   .670                                                                          -.1641
   .700                                             .0312
   .725                                   .0541
   .750                                                      -.0109    -.0528
   .760                         .0121
   .775                                  -.0525    -.0405
   .798               .0211
   .808                        -.0418
   .834     .0069
   .839              -.0719
   .850                                  -.1417    -.2151    -.1773
   .857                        -.1119
   .862                                                                          -.3000
   .865    -.0647
   .879              -.1514
   .900    -.0883                        -.2228                        -.2474
   .905                        -.2229
   .919              -.1724
   .950                                  -.3122    -.2560    -.3042
   .953                        -.2586
   .955              -.1794
   .965    -.1372
  1.000                        -.1379              -.1640              -.4430
```

DATE 10 FEB 76 TABULATED PRESSURE DATA - OA148 (AMES 11-073-1)

AMES 11-073(OA148) -140A/B/C/R ORB LEFT WING BOT (XEBL34)

ALPHA (4) = 7.988 BETA (3) = 4.237 MACH = 1.2474 Q = 600.07 P = 550.87 RN/L = 3.0135

SECTION (1)LEFT WING BOT SURF DEPENDENT VARIABLE CP

2Y/BI	.2990	.3640	4270	.5340	.6730	.7800	.8870	.9720
X/CW								
.010	-.3907	-.5217	.0665	.5129	.4794	.5232	.5327	
.020	.0000	-.3024	.2035	.4271	.4354	.4465	.4628	-.1915
.040		-.2368	.2641					
.050	-.1018			.3447	.3447	.3530	.3924	
.069								-.0864
.080				.2872				
.081			.2075					
.086		-.0342						
.094	-.0552							
.150				.2506	.2855	.3169	.2997	
.157								-.1086
.163		.1748						
.177			.2027					
.229	-.0128							
.246		.1319						
.250				.2337	.2718	.2956	.2309	
.274			.2228					
.345								-.0166
.390		.1993						
.400				.2502	.2825		.2033	
.402			.2240					
.503								-.0455
.550				.2014	.1960			
.565			-.4860					
.600							.0524	
.637		.1887						
.650						.0765		
.670								-.2011
.700					.0356			
.725				.0501				
.750						-.0239	-.0763	
.760			.0106					
.775				-.0434	-.0388			
.788		.0145						
.808			-.0397					
.834	.0026							
.839		-.0650						
.850				-.1329	-.2195	-.1856		
.857			-.1091					
.862								-.3331
.885	-.0734							
[illegible]		-.1423						
.900	-.0760			-.2226			-.2612	
.905			-.2180					
.919		-.1642						

```
                                   AMES 11-073(OA148) -140A/B/C/R ORB LEFT WING                       (XEBL34)

ALPHA ( 4) =    7.988    BETA  ( 3) =    4.237

 SECTION ( 1)LEFT WING BOT SURF              DEPENDENT VARIABLE CP

2Y/BW        .2990   .3640   .4270   .5340   .5730   .7800   .8870   .9720

  X/CW
   .950                             -.2981  -.2348  -.2933
   .953                     -.2347
   .955             -.1856
   .965     -.1590
  1.000                     -.1760          -.1538          -.4364
ALPHA ( 5) =   11.921    BETA  ( 1) =   -3.850   MACH   =  1.2455     Q      =  599.75     P      =  552.28    RN/L   =  3.0144

 SECTION ( 1)LEFT WING BOT SURF              DEPENDENT VARIABLE CP

2Y/BW        .2990   .3640   .4270   .5340   .6730   .7800   .8870   .9720

  X/CW
   .010     -.1726  -.4008   .2981   .6922   .6881   .7396   .7255
   .020      .0000  -.1071   .4489   .6009   .6407   .6700   .6726  -.0347
   .040             -.0403   .4697
   .050      .0761                   .4971   .5354   .5706   .5281
   .069                                                              .0756
   .080                              .4327
   .081                      .4034
   .086              .1538
   .094      .1064
   .150                              .3898   .4562   .4930   .4488
   .157                                                             -.0398
   .163              .3746
   .177                      .3446
   .229      .1277
   .246              .2840
   .250                              .3791   .4248   .4368   .3766
   .274                      .3410
   .345                                                              .1277
   .390              .3190
   .400                              .3734   .3997           .3298
   .402                      .3628
   .503                                                              .0947
   .550                              .3016   .2986
   .565                     -.5418
   .600                                                      .1660
   .637              .2892
   .650                                              .1835
   .670                                                             -.0868
   .700                                      .1120
   .725                              .1247
   .750                                              .0694   .0130
   [illegible]               [illegible]
```

```
                                   AMES 11-073(OA148) -140A/B/C/R ORB LEFT WING BOT                  (XEBL34)

ALPHA ( 5) =   11.921    BETA  ( 1) =    -3.850

 SECTION ( 1)LEFT WING BOT SURF             DEPENDENT VARIABLE CP

2Y/BW        .2990   .3640   .4270   .5340   .6730   .7800   .8870   .9720

  X/CW
    .775                              .0024   .0189
    .798             .0770
    .808                     .0172
    .834     .0736
    .833            -.0317
    .850                            -.0827  -.1545  -.1140
    .857                    -.0499
    .862                                                            -.2285
    .865    -.0024
    .879            -.1128
    .900    -.0317                  -.1776                  -.1683
    .905                    -.1726
    .919            -.1234
    .950                            -.2667  -.2143  -.2514
    .953                    -.2264
    .955            -.1357
    .955    -.0741
   1.000                    -.1691          -.3086          -.5467
ALPHA ( 5) =   11.932    BETA  ( 2) =     .189   MACH   =  1.2455     Q      =  599.75     P      =  552.28      RN/L   =  3.0144

 SECTION ( 1)LEFT WING BOT SURF             DEPENDENT VARIABLE CP

2Y/BW        .2990   .3640   .4270   .5340   .6730   .7800   .8870   .9720

  X/CW
    .010    -.3480  -.4912   .1058   .6205   .6401   .6656   .6440
    .020     .0000  -.2206   .2828   .5691   .6126   .6331   .6268  -.1950
    .040            -.1469   .3735
    .050    -.0116                   .4888   .5294   .5542   .5637
    .063                                                            -.0397
    .080                             .4321
    .081                     .3456
    .086             .0725
    .094     .0439
     150                             .3896   .4571   .4831   .4347
    .157                                                            -.0759
    .163             .3056
    .177                     .3333
    .229     .0865
    .246             .2405
    .250                             .3864   .4183   .4307   .3626
    .274                     .3484
    .345                                                             .0624
     390             .3210
```

```
                               AMES 11-073(OA148) -140A/B/C/R ORB LEFT WING BOT              (XE6L34)

ALPHA ( 5) =   11.932   BETA  ( 2) =     .189

 SECTION ( 1)LEFT WING BOT SURF              DEPENDENT VARIABLE CP

2Y/BW            .2990     .3640     .4270     .5340     .6730     .7800     .8870     .9720

  X/CW
    .400                                       .3703     .3925               .3084
    .402                             .3688
    .503                                                                               .0475
    .550                                       .2983     .2894
    .565                            -.5676
    .600                                                                     .1425
    .637                   .2877
    .650                                                           .1574
    .670                                                                              -.1218
    .700                                                 .1184
    .725                                       .1274
    .750                                                           .0577    -.0057
    .760                             .0770
    .775                                       .0253     .0222
    .798                   .0825
    .808                             .0251
    .834         .0716
    .843                  -.0181
    .850                                      -.0716    -.1692    -.1247
    .857                            -.0522
    .862                                                                              -.2605
    .865        -.0130
    .879                  -.1059
    .900        -.0310                        -.1764                        -.1887
    .905                            -.1755
    .919                  -.1191
    .950                                      -.2645    -.2125    -.2369
    .953                            -.1949
    .955                  -.1455
    .965        -.0999
   1.000                            -.2072              -.2451              -.5635
ALPHA ( 5) =   11.924   BETA  ( 3) =    4.253   MACH   =  1.2455    Q      =  599.75     P      =  552.28     RN/L    =  3.0

 SECTION ( 1)LEFT WING BOT SURF              DEPENDENT VARIABLE CP

2Y/BW            .2990     .3640     .4270     .5340     .6730     .7800     .8870     .9720

  X/CW
    .010        -.4616    -.5412    -.0849     .5234     .5626     .5627     .5442
    .020         .0000    -.3240     .1270     .5092     .5646     .5865     .5608    -.3163
    .040                  -.2510     .2799
    .050        -.0962                         .4577     .5166     .5278     .5258
    .063                                                                              -.1400
    .080                                       .4094
```

```
                          AMES 11-073(OA148) -140A/B/C/R ORB LEFT WING BOT          (XEBL34)
ALPHA ( 5) =    11.924    BETA  ( 3) =    4.253

 SECTION ( 1)LEFT WING BOT SURF                DEPENDENT VARIABLE CP

2Y/BW        .2990     .2540     .4270     .5340     .6730     .7800     .8870     .9720

  X/CW
   .081                          .2557
   .086               -.0117
   .034     -.0281
   .150                                    .3763     .4480     .4682     .4095
   .157                                                                           -.1236
   .163                .2358
   .177                          .3016
   .229      .0369
   .246                .1906
   .250                                    .3737     .4059     .4159     .3461
   .274                          .3423
   .345                                                                            .0045
   .390                .3197
   .400                                    .3551     .3751               .2839
   .402                          .3527
   .503                                                                           -.0015
   .550                                    .2846     .2771
   .565                         -.5217
   .600                                                                  .1218
   .637                .2733
   .650                                                        .1483
   .670                                                                           -.1435
   .700                                              .1156
   .725                                    .1189
   .750                                                        .0437    -.0167
   .760                          .0686
   .775                                    .0250     .0223
   .798                .0735
   .808                          .0204
   .834      .0611
   .839               -.0183
   .850                                   -.0735    -.1893    -.1369
   .857                         -.0560
   .862                                                                           -.2860
   .865     -.0227
   .879               -.0501
   .900     -.0279                        -.1769                        -.2088
   .902                         -.1606
   .910               -.1165
   .940                                   -.2550    -.1907    -.2304
   .943                         -.1807
   .955               -.1508
   .985     -.1220
  1.000                         -.2379              -.1936              -.5345
```

AMES 11-073(OA148) -140A/B/C/R ORB LEFT WING BOT (XE8L35) (25 - 3 75)

REFERENCE DATA

SREF = 2690.0000 SQ.FT.
LREF = 474.8000 IN.
BREF = 936.0680 IN.
SCALE = .0300

XMRP = 1076.6800 IN. XO
YMRP = .0000 IN. YO
ZMRP = 375.0000 IN. ZO

PARAMETRIC DATA

RUDDER = 10.000
BDFLAP = 16.300
R-ELVN = 10.000

SPDBRK = 55.000
L-ELVN = .000
MACH = 1.100

ALPHA (1) = -4.064 BETA (1) = -3.846 MACH = 1.1012 Q = 599.90 P = 705.74 RN/L = 3.1771

SECTION (1)LEFT WING BOT SURF DEPENDENT VARIABLE CP

2Y/BW	.2990	.3040	.4270	.5340	.5730	.7800	.8870	.9720
X/CW								
.010	-.1840	-.3434	-.2923	-.6213	-.7409	-.5551	-.5497	
.020	.0000	-.3172	-.3977	-.7770	-.7790	-.8030	-.8041	-.8431
.040		-.3021	-.4204					
.050	-.1811			-.7245	-.7975	-.8368	-.8289	
.063								-.9316
.080				-.7049				
.081			-.3050					
.086		-.1545						
.094	-.1853							
.150				-.4826	-.6996	-.7351	-.7674	
.157								-.5392
.163		-.0740						
.177			-.2460					
.229	-.1544							
.246		-.1450						
.250				-.2773	-.5832	-.6710	-.7004	
.274			-.2085					
.345								-.8605
.390		-.1592						
.400				-.1587	-.1655		-.6223	
.402			-.1261					
.503								-.8665
.550				-.1277	-.1511			
.565			-.4393					
.600							-.3011	
.637		-.1127						
.650						-.1577		
.670								-.7971
.700					-.2401			
.725				-.2483				
.750						-.2429	-.2566	
.760			-.2651					
.775				-.3593	-.3037			
.798		-.2417						
.809			-.3753					
.834	-.2592							
.839		-.3665						
.850				-.4329	-.3335	-.3760		

```
                    AMES 11-073(OA148) -140A/B/C/R ORB LEFT WING BOT           (XE8L35)

ALPHA ( 1) =   -4.064    BETA  ( 1) =    -3.846

 SECTION ( 1)LEFT WING BOT SURF              DEPENDENT VARIABLE CP

2Y/BW       .2990   .3640   .4270   .5340   .6730   .7800   .8870   .9720

  X/CW
   .857                     -.4133
   .862                                                             -.5622
   .865    -.3428
   .879             -.4174
   .900    -.3163                   -.4851                  -.3939
   .905                     -.5089
   .919             -.4391
   .950                             -.2010  -.4710  -.3448
   .953                     -.1979
   .955             -.1922
   .965    -.3083
  1.000                     -.0889          -.1366          -.0699

ALPHA ( 1) =   -4.062    BETA  ( 2) =     .195   MACH   =  1.1012     Q     =  599.90     P     =  706.74     RN/L   =  3.1771

 SECTION ( 1)LEFT WING BOT SURF              DEPENDENT VARIABLE CP

2Y/BW       .2990   .3640   .4270   .5340   .6730   .7800   .8870   .9720

  X/CW
   .010    -.1425  -.1692  -.1290  -.6182  -.7683  -.6023  -.6116
   .020     .0000  -.1699  -.1392  -.7695  -.8116  -.8370  -.8538  -.9094
   .040            -.1548  -.2579
   .050    -.1362                   -.6864  -.8180  -.8670  -.8791
   .069                                                             -.9154
   .080                             -.6448
   .081                     -.1867
   .086            -.0465
   .094    -.1390
   .150                             -.2907  -.6880  -.7625  -.7940
   .157                                                             -.5369
   .163             .0268
   .177                     -.1853
   .229    -.1120
   .246            -.0834
   .250                             -.1832  -.2261  -.6135  -.7322
   .274                     -.1349
   .345                                                             -.8834
   .390            -.1004
   .400                             -.1242  -.1216          -.4122
   .422                     -.1061
   .503                                                             -.8000
   .550                             -.1228  -.1481
   .565                     -.5542
   .600                                                     -.1604
```

AMES 11-073(OA148) -140A/B/C/R ORB LEFT WING BOT (XEBL35)

ALPHA (1) = -4.062 BETA (2) = .195

SECTION (1)LEFT WING BOT SURF DEPENDENT VARIABLE CP

2Y/BW	.2990	.3640	.4270	.5340	.6730	.7800	.8870	.9720
X/CW								
.637		-.1170						
.650						-.1746		
.670								-.4887
.700					-.2500			
.725				-.2451				
.750						-.2647	-.2449	
.760			-.2730					
.775				-.3563	-.3179			
.798		-.2400						
.808			-.3752					
.834	-.2480							
.839		-.3486						
.850				-.4420	-.3543	-.3879		
.857			-.4036					
.862								-.4994
.865	-.3256							
.879		-.4080						
.900	-.3163			-.5035			-.4200	
.905			-.5128					
.919		-.4347						
.950				-.3329	-.4610	-.4695		
.953			-.3518					
.955		-.3900						
.965	-.4476							
1.000			-.1234		-.1850		-.1410	

ALPHA (1) = -4.062 BETA (3) = 4.274 MACH = 1.1012 Q = 599.90 P = 706.74 RN/L = 3.177

SECTION (1)LEFT WING BOT SURF DEPENDENT VARIABLE CP

2Y/BW	.2990	.3640	.4270	.5340	.6730	.7800	.8870	.9720
X/CW								
.010	-.1178	-.0659	.0479	-.5814	-.7724	-.6347	-.6537	
.020	.0000	-.0574	.0145	-.7084	-.8116	-.8537	-.8758	-.8408
.040		-.0399	-.1023					
.050	-.1009			-.5890	-.7534	-.8462	-.8583	
.069								-.8121
.080				-.2927				
.091			-.0763					
.086		.0315						
.094	-.1041							
.150				-.2174	-.3063	-.6622	-.8013	
.157								-.4377
.163		.1138						

AMES 11-073(OA148) -140A/B/C/R ORB LEFT WING BOT (XE8L35)

ALPHA (1) = -4.062 BETA (3) = 4.274

SECTION (1)LEFT WING BOT SURF DEPENDENT VARIABLE CP

2Y/BW	.2990	.3640	.4270	.5340	.6730	.7800	.8870	.9720
X/CW								
.177			-.1035					
.229	-.0639							
.24E		.0053						
.250				-.1398	-.1953	-.2627	-.4921	
.274			-.0722					
.345								-.5916
.390		-.0354						
.400				-.1090	-.1184		-.2263	
.402			-.0805					
.503								-.4934
.550				-.1316	-.1546			
.565			-.4290					
.600							-.2036	
.637		-.1125						
.650						-.1976		
.670								-.3688
.700					-.2684			
.725				-.2533				
.750						-.2814	-.3030	
.760			-.2834					
.775				-.3627	-.3449			
.798		-.2416						
.808			-.3801					
.834	-.2626							
.839		-.3604						
.850				-.4390	-.4000	-.4238		
.857			-.4016					
.862								-.3987
.865	-.3563							
.879		-.3928						
.900	-.3362			-.5105			-.4415	
.905			-.5094					
.919		-.4114						
.950				-.5389	-.4561	-.5004		
.953			-.4981					
.955		-.4403						
.965	-.4807							
1.000			-.1626		-.2677		-.1809	

```
                                  AMES 11-073(OA148) -140A/B/C/R ORB LEFT WING BOT            (XE8L35)

ALPHA ( 2) =    -.023   BETA  ( 1) =   -3.863   MACH   =  1.0993     Q      =  599.08     P      =  708.12     RN/L   =  3.[illegible]33

 SECTION ( 1)LEFT WING BOT SURF          DEPENDENT VARIABLE CP

2Y/BW        .2990   .3640   .4270   .5340   .6730   .7800   .8870   .9720

  X/CW
    .010    -.0470  -.0100   .2018  -.3392  -.4747  -.4006  -.3190
    .020     .0000  -.0396   .1210  -.4929  -.5553  -.5646  -.6000  -.4449
    .040            -.0297  -.0672
    .050    -.0891                  -.3218  -.4744  -.5675  -.6016
    .069                                                            -.4425
    .080                            -.2616
    .081                    -.0686
    .086             .0195
    .094    -.1076
    .150                            -.1849  -.2128  -.3814  -.4671
    .157                                                            -.2440
    .163             .0842
    .177                    -.0884
    .229    -.0790
    .246            -.0275
    .250                            -.0553  -.0978  -.0955  -.0796
    .274                    -.0367
    .345                                                            -.0877
    .390            -.0129
    .400                             .0079   .0101          -.0306
    .402                     .0075
    .503                                                            -.1468
    .550                            -.0082  -.0403
    .565                    -.5120
    .600                                                    -.1196
    .637            -.0046
    .650                                            -.0865
    .670                                                            -.3001
    .700                                    -.1541
    .725                            -.1572
    .750                                            -.1986  -.2611
    .760                    -.1967
    .775                            -.2461  -.2379
    .798            -.1723
    .808                    -.2993
    .834    -.1917
    .839            -.3017
    .850                            -.3696  -.2511  -.3584
    .857                    -.3385
    .862                                                            -.3942
    .865    -.2515
    .873            -.3582
    .900    -.2329                  -.4266                  -.4139
    .905                    -.4220
    .919            -.3603
```

```
DATE 10 FEB 76              TABULATED PRESSURE DATA - OA148 ( AMES 11-073-1 )                                    PAGE 2041

                                   AMES 11-073(OA148) -140A/B/C/R ORB LEFT WING BOT               (XEBL35)

ALPHA ( 2) =     -.023    BETA  ( 1) =    -3.863

 SECTION ( 1)LEFT WING BOT SURF                 DEPENDENT VARIABLE CP

2Y/BW        .2990   .3640   .4270   .5340   .6730   .7800   .8870   .9720

  X/CW
    .950                             -.1897  -.456;  -.4100
    .953                     -.1317
    .955             -.1995
    .965    -.3307
   1.000                     -.0107          -.1482          -.0486
ALPHA ( 2) =     -.020    BETA  ( 2) =      .185   MACH   =  1.0993     Q      =  599.08     P      =  708.12     RN/L   =  3.1793
 SECTION ( 1)LEFT WING BOT SURF                 DEPENDENT VARIABLE CP

2Y/BW        .2990   .3640   .4270   .5340   .6730   .7800   .8870   .9720

  X/CW
    .010    -.0977  -.0132   .2845  -.2803  -.4608  -.4190  -.3407
    .020     .0000  -.0170   .2165  -.2680  -.4303  -.5557  -.5950  -.2335
    .040            -.0028   .0624
    .050    -.1066                  -.2348  -.3716  -.4515  -.4781
    .069                                                            -.2190
    .080                            -.1642
    .081                     .0024
    .086             .0527
    .094    -.1079
    .150                            -.1172  -.0981  -.0673  -.1291
    .157                                                            -.1632
    .163             .1549
    .177                    -.0316
    .229    -.0621
    .246             .0217
    .250                            -.0342  -.0493  -.0657  -.1182
    .274                    -.0035
    .345                                                            -.0998
    .393             .0208
    .400                            -.0014   .0376          -.0190
    .402                     .0043
    .503                                                            -.1618
    .550                            -.0100  -.0339
    .565                    -.6218
    .600                                                    -.1454
    .637            -.0012
    .650                                            -.1059
    .670                                                            -.3113
    .700                                    -.1637
    .725                            -.1594
    .750                                            -.2193  -.2716
    .760                    -.1925
```

```
                              AMES 11-073(OA148) -140A/B/C/R ORB LEFT WING BOT                (XE8L35)
ALPHA ( 2) =    -.020    BETA  ( 2) =      .185
 SECTION ( 1)LEFT WING BOT SURF                DEPENDENT VARIABLE CP
2Y/BW      .2990   .3640   .4270   .5340   .6730   .7800   .8870   .9720
  X/CW
   .775                          -.2558  -.2489
   .798           -.1639
   .808                   -.2939
   .834   -.1783
   .839           -.2825
   .850                          -.3651  -.2948  -.3869
   .857                   -.3277
   .862                                                          -.3981
   .865   -.2634
   .879           -.3403
   .900   -.2483                 -.4348                  -.4238
   .905                   -.4193
   .919           -.3274
   .950                          -.3282  -.4255  -.4967
   .953                   -.3508
   .955           -.3392
   .965   -.3934
  1.000                   -.0385         -.1551          -.1201
ALPHA ( 2) =    -.024    BETA  ( 3) =    4.249   MACH   =  1.0993     Q      =  599.08     P      =  708.12     RN/L   =  3.1793
 SECTION ( 1)LEFT WING BOT SURF                DEPENDENT VARIABLE CP
2Y/BW      .2990   .3640   .4270   .5340   .6730   .7800   .8870   .9720
  X/CW
   .010   -.1977  -.0385   .3438  -.0873  -.3157  -.3683  -.2985
   .020    .0000  -.0125   .3024  -.1048  -.2502  -.3593  -.4647  -.1684
   .040            .0106   .1694
   .050   -.1480                 -.0914  -.2350  -.2772  -.3458
   .069                                                          -.1738
   .080                          -.0715
   .081                    .0836
   .086            .1079
   .094   -.1216
   .150                          -.0266  -.0443  -.0844  -.1147
   .157                                                          -.1689
   .163            .2213
   .177                    .0457
   .229   -.0597
   .246            .0864
   .250                           .0064  -.0410  -.0631  -.1045
   .274                    .0493
   .345                                                          -.1341
   .390            .0647
```

```
                     AMES 11-073(OA148) -140A/B/C/R ORB LEFT WING BOT          (XEBL35)

ALPHA ( 2) =    -.024    BETA  ( 3) =    4.249

 SECTION ( 1)LEFT WING BOT SURF             DEPENDENT VARIABLE CP

2Y/BW       .2990    .3640    .4270    .5340    .6730    .7800    .8870    .9720

  X/CW
    .400                                .0187    .0211            -.0481
    .402                       .0351
    .503                                                                   -.1904
    .550                               -.0275   -.0542
    .565                      -.4993
    .600                                                          -.1745
    .637             -.0187
    .650                                                 -.1379
    .670                                                                   -.3158
    .700                                        -.1963
    .725                               -.1779
    .750                                                 -.2228   -.2813
    .760                      -.2043
    .775                               -.2858   -.2544
    .798             -.1675
    .808                      -.2738
    .834    -.1885
    .839             -.2829
    .850                               -.3869   -.3346   -.3910
    .857                      -.3093
    .862                                                                   -.3970
    .865    -.2790
    .879             -.3478
    .900    -.2620                     -.4426                     -.4520
    .905                      -.4251
    .919             -.3464
    .950                               -.4847   -.3962   -.5000
    .953                      -.4383
    .955             -.3693
    .965    -.3830
   1.000                      -.0994            -.2101            -.1627
ALPHA ( 3) =    3.952    BETA  ( 1) =   -3.863    MACH   =  1.0983    Q      =  598.70    P      =  709.06    RN/L   =  3.1785

 SECTION ( 1)LEFT WING BOT SURF             DEPENDENT VARIABLE CP

2Y/BW       .2990    .3640    .4270    .5340    .6730    .7800    .8870    .9720

  X/CW
    .010    -.0282   -.0632    .4642    .1956    .1128    .2164    .2567
    .020     .0000   -.0038    .4075    .0634    .0922    .1006    .1144    .0749
    .040              .0295    .2374
    .050    -.0196                      .0511    .0574    .0689    .1116
    .069                                                                    .0446
    .080                                .0544
```

AMES 11-073(OA148) -140A/B/C/R ORB LEFT WING BOT (XE8L35)

ALPHA (3) = 3.952 BETA (1) = -3.863

SECTION (1)LEFT WING BOT SURF DEPENDENT VARIABLE CP

2Y/BW X/CW	.2990	.3640	.4270	.5340	.6730	.7800	.8870	.9720
.081			.1349					
.086		.1224						
.094	-.0413							
.150				.1102	.1276	.1409	.1014	
.157								-.0781
.163		.2356						
.177			.0848					
.229	-.0408							
.246		.0954						
.250				.1461	.1369	.1321	.0644	
.274			.1548					
.345								-.0195
.390		.1621						
.400				.1655	.1662		.0884	
.402			.1804					
.503								-.0772
.550				.0872	.0668			
.565			-.5927					
.600							-.0658	
.637		.0985						
.650						-.0258		
.670								-.2487
.700					-.1009			
.725				-.0885				
.750						-.1362	-.1873	
.760			-.1205					
.775				-.1876	-.1956			
.798		-.1066						
.808			-.2170					
.834	-.1239							
.839		-.2257						
.850				-.3176	-.2615	-.3202		
.857			-.2684					
.862								-.3808
.865	-.1988							
.879		-.2997						
.900	-.1984			-.3887			-.3787	
.905			-.3876					
.919		-.3143						
.950				-.3795	-.3564	-.4547		
.953			-.2925					
.955		-.2853						
.965	-.3114							
1.000			.0095		-.1248		-.2132	

REPRODUCIBILITY OF THE
ORIGINAL PAGE IS POOR

DATE 10 FEB 76 TABULATED PRESSURE DATA - OA148 (AMES 11T073-1)

AMES 11-073(OA148) -140A/B/C/R ORB LEFT WING BOT (XEBL35)

ALPHA (3) = 3.952 BETA (2) = .189 MACH = 1.0983 Q = 598.70 P = 709.06 RN/L = 3.1785

SECTION (1)LEFT WING BOT SURF DEPENDENT VARIABLE CP

2Y/BW	.2990	.3640	.4270	.5340	.6730	.7800	.8870	.9720
X/CW								
.010	-.1690	-.1903	.4365	.2829	.1784	.2756	.2852	
.020	.0000	-.0869	.4150	.1537	.1680	.1656	.1744	.0033
.040		-.0451	.2833					
.050	-.0853			.1261	.0990	.1282	.1419	
.069								-.0017
.080				.1128				
.081			.1805					
.086		.0995						
.094	-.0871							
.150				.1336	.1546	.1618	.1104	
.157								-.1014
.163		.2679						
.177			.1429					
.229	-.0554							
.240		.1382						
.250				.1656	.1531	.1467	.0729	
.274			.1704					
.345								-.0652
.390		.1654						
.400				.1694	.1690		.0758	
.402			.1829					
.503								-.1135
.550				.0943	.0633			
.565			-.6602					
.600							-.0827	
.637		.0980						
.650						-.0465		
.670								-.2807
.700					-.1064			
.725				-.0846				
.750						-.1232	-.2052	
.760			-.1224					
.775				-.1945	-.1865			
.788		-.1016						
.808			-.2088					
.834	-.1195							
.839		-.2180						
.850				-.3035	-.2526	-.3368		
.8[illegible]7			-.2581					
[illegible]								-.4313
.8[illegible]5	-.2081							
.879		-.2923						
[illegible]	-.1988			-.3881			-.4039	
.9[illegible]5			-.3850					
.919		-.3025						

```
DATE 10 FEB 76          TABULATED PRESSURE DATA - OA148 ( AMES 11-073-1 )

                                  AMES 11-073(OA148) -140A/B/C/R ORB LEFT WING BOT              (XEBL35)

ALPHA ( 3) =    3.952    BETA  ( 2) =      .189

 SECTION ( 1)LEFT WING BOT SURF              DEPENDENT VARIABLE CP

2Y/BW          .2990     .3640     .4270     .5340     .6730     .7800     .8870     .9720

  X/CW
    .950                                    -.3966    -.3626    -.4419
    .953                          -.3850
    .955                -.3103
    .965      -.2992
   1.000                          -.0028              -.1012              -.2343

ALPHA ( 3) =    3.960    BETA  ( 3) =    4.243    MACH   =  1.0983    Q     =  598.70    P     =  709.06    RN/L   =  3.1785

 SECTION ( 1)LEFT WING BOT SURF              DEPENDENT VARIABLE CP

2Y/BW          .2990     .3640     .4270     .5340     .6730     .7800     .8870     .9720

  X/CW
    .010      -.3572    -.3285     .4042     .3737     .2612     .3173     .3259
    .020       .0000    -.1768     .4234     .2677     .2315     .2270     .2294    -.1344
    .040                -.1231     .3469
    .050      -.1719                         .2200     .1623     .1600     .1723
    .069                                                                            -.1001
    .080                                     .1878
    .081                           .2497
    .086                 .0737
    .094      -.1423
    .150                                     .1727     .1717     .1631     .1154
    .157                                                                            -.1385
    .163                 .3070
    .177                           .1990
    .229      -.0781
    .246                 .1951
    .250                                     .1671     .1518     .1510     .0643
    .274                           .1836
    .345                                                                            -.1266
    .390                 .1915
    .400                                     .1550     .1558               .0496
    .402                           .1770
    .503                                                                            -.1655
    .540                                     .0852     .0542
    .545                          -.5809
    .600                                                                  -.1027
    .637                 .0867
    .650                                                        -.0701
    .670                                                                            -.3219
    .700                                              -.1103
    .725                                    -.0949
    .750                                                        -.1428    -.2287
    .760                          -.1321
```

```
                                    AMES 11-073(OA148) -140A/B/C/R ORB LEFT WING BOT             (XEBL35)
ALPHA ( 3) =    3.960    BETA  ( 3) =    4.243

 SECTION ( 1)LEFT WING BOT SURF              DEPENDENT VARIABLE CP

2Y/BW        .2930   .3640   .4270   .5340   .6730   .7800   .8870   .9720

  X/CW
    .775                             -.2076  -.1998
    .798          -.1068
    .808                  -.2140
    .834  -.1247
    .839          -.2178
    .850                             -.3083  -.2844  -.3513
    .857                  -.2625
    .862                                                             -.4696
    .865  -.2168
    .879          -.2901
    .900  -.2150                     -.4019                  -.4260
    .905                  -.3811
    .919          -.3117
    .950                             -.4497  -.3562  -.4450
    .953                  -.4007
    .955          -.3270
    .965  -.2997
   1.000                  -.0597             -.1467          -.3078
ALPHA ( 4) =    8.030    BETA  ( 1) =   -3.862   MACH  =  1.0987     Q     =  598.57    P     =  708.35    RN/L  =  3.1769
 SECTION ( 1)LEFT WING BOT SURF              DEPENDENT VARIABLE CP

2Y/BW        .2990   .3640   .4270   .5340   .6730   .7800   .8870   .9720

  X/CW
    .010  -.1246  -.3884   .4422   .6202   .5741   .6310   .6110
    .020   .0000  -.1533   .5412   .5068   .5144   .5181   .5087  -.0236
    .040          -.1002   .4805
    .050   .0081                   .4072   .4091   .4215   .4096
    .059                                                             .0375
    .080                           .3523
    .081                   .3737
    .086           .0353
    .094   .0127
    .150                           .3265   .3443   .3504   .2880
    .157                                                            -.0689
    .163           .3591
    .177                   .3085
    .229   .0113
    .246           .2715
    .250                           .3046   .3017   .2945   .2281
    .274                   .2982
    .345                                                             .0082
    .390           .2876
```

```
                           AMES 11-073(OA148) -140A/B/C/R ORB LEFT WING BOT              (XEBL35)

ALPHA ( 4) =    8.033    BETA  ( 1) =    -3.862

 SECTION ( 1)LEFT WING BOT SURF              DEPENDENT VARIABLE CP

2Y/BW        .2990   .3640   .4270   .5340   .6730   .7800   .8870   .9720

  X/CW
    .400                                 .2678   .2708           .1828
    .402                         .2913
    .503                                                                 -.0327
    .550                                 .1749   .1594
    .565                        -.6478
    .600                                                         .0134
    .637                 .1739
    .650                                                 .0488
    .670                                                                 -.2047
    .700                                        -.0376
    .725                                -.0211
    .750                                                -.0767  -.1504
    .760                        -.0723
    .775                                -.1395  -.1499
    .793                -.0574
    .808                        -.1509
    .834        -.0590
    .847                -.1812
    .850                                -.2535  -.3123  -.2722
    .857                        -.2047
    .862                                                                 -.3496
    .865        -.1559
    .873                -.2600
    .900        -.1320                  -.3553                  -.3272
    .905                        -.3439
    .919                -.2401
    .950                                -.4368  -.3550  -.4302
    .953                        -.3593
    .955                -.2602
    .955        -.2506
   1.000                         .0035          -.1525          -.4526
ALPHA ( 4) =    8.033    BETA  ( 2) =     .183   MACH   =  1.0987     Q    .  595.57     [illegible]    =  [illegible]3.35    RN/L   =  3.1765

 SECTION ( 1)LEFT WING BOT SURF              DEPENDENT VARIABLE CP

2Y/BW        .2990   .3640   .4270   .5340   .6730   .7800   .8870   .9720

  X/CW
    .010    -.3391  -.6355   .2935   .6167   .5622   .6126   .5768
    .020     .0000  -.3123   .4367   .5289   .5194   .5192   .5049  -.1709
    .040            -.2373   .4552
    .050    -.0902                   .4283   .4238   .4282   .4174
    .060                                                             -.0776
    .080                             .3739
```

AMES 11-073(OA148) -140A/B/C/R ORB LEFT WING BOT (XEBL35)

ALPHA (4) = 8.039 BETA (2) = .183

SECTION (1)LEFT WING BOT SURF DEPENDENT VARIABLE CP

2Y/BW	.2990	.3640	.4270	.5340	.6730	.7800	.8870	.9720
X/CW								
.081			.3881					
.085		.0225						
.094	-.0552							
.150				.3222	.3499	.3556	.2830	
.157								-.1021
.163		.3573						
.177			.3289					
.223	-.0293							
.246		.2934						
.250				.3092	.3117	.2969	.2187	
.274			.3144					
.345								-.0476
.390		.3016						
.400				.2755	.2700		.1667	
.402			.2898					
.503								-.0681
.550				.1741	.1552			
.555			-.7260					
.600							-.0012	
.637		.1804						
.650						.0195		
.673								-.2429
.700					-.0276			
.725				-.0171				
.750						-.0851	-.1664	
.760			-.0629					
.775				-.1308	-.1471			
.798		-.0460						
.808			-.1425					
.834	-.0608							
.839		-.1624						
.850				-.2423	-.3170	-.2956		
.857			-.1956					
.862								-.3911
.865	-.1558							
.879		-.2356						
.900	-.1279			-.3609			-.3476	
.905			-.3210					
.919		-.2294						
.930				-.4290	-.3336	-.4155		
.943			-.3316					
.955		-.2438						
.965	-.2135							
1.000			.0172		-.0689		-.4748	

AMES 11-073(OA148) -140A/B/C/R ORB LEFT WING BOT (XEBL35)

ALPHA (4) = 8.037 BETA (3) = 4.237 MACH = 1.0987 Q = 598.57 P = 708.35 RN/L = 3.17E3

SECTION (1)LEFT WING BOT SURF DEPENDENT VARIABLE CP

2Y/BW	.2990	.3640	.4270	.5340	.6730	.7800	.8870	.9720
X/CW								
.010	-.5582	-.4523	.1990	.5960	.5424	.5440	.5123	
.020	.0000	-.3555	.3577	.5257	.5029	.4957	.4602	-.3472
.040		-.2904	.4298					
.050	-.1938			.4463	.4136	.4118	.3875	
.069								-.2037
.080				.3915				
.081			.3921					
.085		-.0319						
.094	-.1324							
.150				.3404	.3459	.3381	.2532	
.157								-.1506
.163		.3356						
.177			.3425					
.229	-.0700							
.246		.2844						
.250				.3018	.2968	.2807	.1957	
.274			.3095					
.345								-.1231
.390		.3034						
.400				.2517	.2534		.1374	
.402			.2777					
.503								-.1232
.550				.1617	.1378			
.555			-.6508					
.600							-.0338	
.637		.1621						
.650						-.0051		
.670								-.2895
.700					-.0381			
725				-.0269				
.750						-.1056	-.1907	
.760			-.0774					
.775				-.1425	-.1447			
.793		-.0543						
.809			-.1490					
.834	-.0736							
.839		-.1661						
.850				-.2436	-.3163	-.3109		
.857			-.2062					
.862								-.4397
.865	-.1692							
.873		-.2258						
.900	-.1516			-.3569			-.3777	
.905			-.3158					
.919		-.2292						

AMES 11-073(OA148) -140A/B/C/R ORB LEFT WING BOT (XEBL35)

ALPHA (4) = 8.037 BETA (3) = 4.237

SECTION (1)LEFT WING BOT SURF DEPENDENT VARIABLE CP

2Y/BW	.2990	.3640	.4270	.5340	.6730	.7800	.8870	.9720
X/CW								
.950				-.4265	-.3139	-.4071		
.953			-.3084					
.955		-.2543						
.965	-.2269							
1.000			-.0342		-.0968		-.5129	

ALPHA (5) = 11.975 BETA (1) = -3.842 MACH = 1.0987 Q = 598.75 P = 708.59 RN/L = 3.1753

SECTION (1)LEFT WING BOT SURF DEPENDENT VARIABLE CP

2Y/BW	.2990	.3640	.4270	.5340	.6730	.7800	.8870	.9720
X/CW								
.010	-.2900	-.5727	.2340	.7400	.7358	.7264	.6804	
.020	.0000	-.2109	.4567	.6958	.7042	.7022	.6590	-.1969
.040		-.1246	.5530					
.050	.0143			.5962	.6128	.6128	.5797	
.063								-.0452
.080				.5402				
.081			.5121					
.086		.1982						
.094	.0591							
.150				.4764	.5002	.4983	.4255	
.157								-.0836
.163		.4638						
.177			.4505					
.229	.0825							
.246		.3985						
.250				.4301	.4345	.4182	.3459	
.274			.4176					
.345								.0547
.390		.4016						
.400				.3643	.3658		.2631	
.402			.3829					
.503								.0183
.550				.2549	.2333			
.565			-.6757					
.600							.0773	
.637		.2474						
.650						.1244		
.670								-.1467
.700					.0584			
.725				.0553				
.750						-.0205	-.0912	
.760			-.0105					

```
                                   AMES 11-073(OA148) -140A/B/C/R ORB LEFT WING BOT              (XE8L35)
ALPHA ( 5) =    11.975    BETA  ( 1) =    -3.842

 SECTION ( 1)LEFT WING BOT SURF                 DEPENDENT VARIABLE CP

2Y/BW        .2990   .3640   .4270   .5340   .6730   .7800   .8870   .9720

  X/CW
    .775                             -.0540  -.0838
    .798             .0046
    .808                     -.0781
    .834    -.0107
    .839            -.1192
    .850                             -.1813  -.2718  -.2194
    .857                     -.1297
    .862                                                             -.3096
    .865    -.0983
    .879            -.2059
    .900    -.0973                   -.3171                  -.2770
    .905                     -.2826
    .919            -.1877
    .950                             -.3818  -.2908  -.3624
    .953                     -.2902
    .955            -.2142
    .965    -.1674
   1.000                     -.0855          -.2775          -.5382
ALPHA ( 5) =    11.986    BETA  ( 2) =     .188   MACH    =  1.0987     Q     =  598.75     P     =  708.59     RN/L   =  3.1753
 SECTION ( 1)LEFT WING BOT SURF                 DEPENDENT VARIABLE CP

2Y/BW        .2990   .3640   .4270   .5340   .6730   .7800   .8870   .9720

  X/CW
    .010    -.4943  -.6475  -.0049   .6634   .6699   .6357   .5862
    .020     .0000  -.3350   .2776   .6580   .6660   .6561   .5996  -.3458
    .040            -.2454   .4620
    .050    -.0897                   .5921   .6008   .5883   .5484
    .069                                                             -.1555
    .080                             .5363
    .081                     .4800
    .086             .0816
    .094    -.0180
    .150                             .4760   .4997   .4912   .4087
    .157                                                             -.1110
    .163             .4026
    .177                     .4532
    .229     .0425
    .246             .3796
    .250                             .4285   .4312   .4120   .3284
    .274                     .4195
    .345                                                             -.0078
    .390             .4002
```

AMES 11-073(OA148) -140A/B/C/R ORB LEFT WING BOT (XE8L35)

ALPHA (5) = 11.986 BETA (2) = .188

SECTION (1)LEFT WING BOT SURF DEPENDENT VARIABLE CP

2Y/BW	.2990	.3640	.4270	.5340	.6730	.7800	.8870	.9720
X/CW								
.400				.3633	.3618		.2426	
.402			.3821					
.503								-.0313
.550				.2573	.2319			
.565			-.7464					
.600							.0577	
.637		.2538						
.650						.1198		
.670								-.1930
.700					.0547			
.725				.0619				
.750						-.0257	-.0982	
.760			.0020					
.775				-.0457	-.0719			
.799		.0182						
.808			-.0660					
.834	.0026							
.839		-.0972						
.850				-.1705	-.2700	-.2513		
.857			-.1203					
.852								-.3604
.865	-.0943							
.879		-.1516						
.900	-.0563			-.3021			-.2977	
.905			-.2274					
.919		-.1599						
.950				-.3699	-.2864	-.3385		
.953			-.2597					
.955		-.2023						
.965	-.1748							
1.000			-.0741		-.1987		-.5826	

ALPHA (5) = 11.981 BETA (3) = 4.246 MACH = 1.0987 Q = 598.75 P = 708.59 RN/L = 3.1753

SECTION (1)LEFT WING BOT SURF DEPENDENT VARIABLE CP

2Y/BW	.2990	.3640	.4270	.5340	.6730	.7800	.8870	.9720
X/CW								
.010	-.6452	-.6758	-.1391	.5707	.5769	.5100	.4676	
.020	.0000	-.4580	.1414	.6026	.5951	.5750	.5093	-.4755
.040		-.3569	.3901					
.050	-.1953			.5625	.5586	.5319	.4884	
.069								-.2703
.080				.5117				

AMES 11-073(OA148) -140A/B/C/R ORB LEFT WING BOT (XEBL35)

ALPHA (5) = 11.981 BETA (3) = 4.246

SECTION (1)LEFT WING BOT SURF DEPENDENT VARIABLE CP

2Y/BW	.2990	.3640	.4270	.5340	.6730	.7800	.8870	.9720
X/CW								
.081			.4560					
.086		-.0184						
.094	-.1028							
.150				.4527	.4651	.4529	.3637	
.157								-.1593
.163		.3626						
.177			.4460					
.229	-.0090							
.246		.3645						
.250				.4047	.4002	.3833	.2898	
.274			.4067					
.345								-.0883
.390		.3884						
.400				.3369	.3358		.2080	
.402			.3610					
.503								-.1022
.550				.2382	.2128			
.555			-.6802					
.600							.0253	
.637		.2395						
.650						.0920		
.670								-.2500
.700					.0400			
.725				.0493				
.750						-.0498	-.1248	
.760			-.0135					
.775				-.0665	-.0803			
.798		.0029						
.808			-.0675					
.834	-.0043							
.839		-.0949						
.850				-.1749	-.2713	-.2717		
.857			-.1220					
.862								-.4185
.865	-.1002							
.879		-.1495						
.900	-.0803			-.3059			-.3368	
.905			-.2279					
.919		-.1846						
.950				-.3599	-.2886	-.3479		
.953			-.2694					
.955		-.2243						
.965	-.2000							
1.000			-.1808		-.1764		-.6321	

```
                                                                                                   PAGE 2055
DATE 10 FEB 76            TABULATED PRESSURE DATA - OA148 ( AMES 11-073-1 )
                                                                                        (XE8L36)    ( 05 AUG 75  )
                                  AMES 11-073(OA148) -140A/B/C/R ORB LEFT WING BOT
                                                                                    PARAMETRIC DATA
                REFERENCE DATA
                                                                            RUDDER =    10.000  SPDBRK =    35.000
SREF  =  2690.0000 SQ.FT.   XMRP  =  1076.6800 IN. XO                       BDFLAP =    16.300  L-ELVN =      .000
LREF  =   474.8000 IN.      YMRP  =      .0000 IN. YO                       R-ELVN =    10.000  MACH   =      .900
BREF  =   936.0680 IN.      ZMRP  =   375.0000 IN. ZO
SCALE =      .0300

ALPHA ( 1) =   -4.063   BETA  ( 1) =   -3.844   MACH   =  .90163    Q     =  601.33    P     =  1056.6    RN/L  =  3.5806

 SECTION ( 1)LEFT WING BOT SURF                 DEPENDENT VARIABLE CP

2Y/BW         .2990    .3640    .4270    .5340    .6730    .7800    .8870    .9720

  X/CW
   .010      -.1423   -.3087   -.4971  -1.0839  -1.2481  -1.0162  -1.0367
   .020       .0000   -.2564   -.5463  -1.2613  -1.3049  -1.3230  -1.3340  -1.3399
   .0[illegible]0               -.2293   -.6670
   .050      -.1324                     -1.1566  -1.3051  -1.3589  -1.3644
   .069                                                                     -1.2495
   .080                                 -1.0604
   .081                        -.4834
   .086               -.1189
   .094      -.1197
   .150                                  -.6241  -1.1395  -1.2171  -1.2422
   .157                                                                      -.6192
   .163               -.1742
   .177                        -.4728
   .229      -.0533
   .246               -.3174
   .250                                  -.4141   -.4673   -.8919  -1.1631
   .274                        -.3821
   .345                                                                      -.7402
   .390               -.3412
   .400                                  -.2753   -.2606            -.3891
   .402                        -.2705
   .503                                                                      -.5772
   .550                                  -.3073   -.2467
   .565                        -.7609
   .600                                                             -.2100
   .637               -.2918
   .650                                                    -.2375
   .670                                                                      -.4054
   .700                                           -.2887
   .725                                  -.3201
   .750                                                    -.3978   -.3391
   .760                        -.2884
   .775                                  -.4586   -.3559
   .[illegible]8               -.2571
   .808                        -.4999
   .834      -.2792
   .839               -.3667
   [illegible]                                  -.2813   -.2474   -.2379
```

```
DATE 10 FEB 76          TABULATED PRESSURE DATA - OA148 ( AMES 11-073-1 )                              PAGE 2056

                              AMES 11-073(OA148) -140A/B/C/R ORB LEFT WING BOT                  (XEBL36)

ALPHA ( 1) =   -4.063    BETA  ( 1) =   -3.844

 SECTION ( 1)LEFT WING BOT SURF                DEPENDENT VARIABLE CP

2Y/BW        .2990     .3640     .4270     .5340     .6730     .7800     .8870     .9720

  X/CW
   .857                          -.2479
   .862                                                                          -.2941
   .865     -.3692
   .879               -.1962
   .900     -.1776                         -.1336                        -.1612
   .905                          -.1232
   .919               -.1023
   .950                                    -.0271    -.1490    -.0165
   .953                          -.0184
   .955               -.0256
   .965     -.0318
  1.000                           .0556               .0057               .0392

ALPHA ( 1) =   -4.055    BETA  ( 2) =     .194   MACH   =  .90163     Q      =  601.33     P      =  1056.6     RN/L   =  3.5806

 SECTION ( 1)LEFT WING BOT SURF                DEPENDENT VARIABLE CP

2Y/BW        .2990     .3640     .4270     .5340     .6730     .7800     .8870     .9720

  X/CW
   .010     -.0490    -.1252    -.3300   -1.0700   -1.2679   -1.0639   -1.0951
   .020      .0000    -.0995    -.3773   -1.2306   -1.3317   -1.3515   -1.1743    -.6718
   .040               -.0846    -.4726
   .050     -.0629                        -1.1095   -1.2636   -1.2935   -1.1818
   .069                                                                          -.5956
   .080                                    -.6921
   .081                          -.3905
   .086               -.0349
   .094     -.0601
   .150                                    -.5095    -.6817   -1.0958   -1.0345
   .157                                                                          -.3744
   .163               -.0905
   .177                          -.4018
   .229     -.0162
   .246               -.2513
   .250                                    -.3645    -.3957    -.4979    -.8102
   .274                          -.3121
   .345                                                                          -.4680
   .330               -.2909
   .400                                    -.2473    -.2822              -.5404
   .402                          -.2318
   .503                                                                          -.4344
   .550                                    -.3132    -.3490
   .565                          -.7217
   .600                                                                -.2697
```

```
                                     AMES 11-073(OA148) -140A/B/C/R ORB LEFT WING BOT             (XEBL36)
ALPHA ( 1) =    -4.055    BETA  ( 2) =      .194
 SECTION ( 1)LEFT WING BOT SURF                   DEPENDENT VARIABLE CP
2Y/BW       .2990   .3640   .4270   .5340   .6730   .7800   .8870   .9720
  X/CW
   .637             -.2869
   .650                                             -.2957
   .670                                                             -.3304
   .700                                     -.3619
   .725                             -.3981
   .750                                             -.4159  -.3417
   .760                     -.3546
   .775                             -.4894  -.3723
   .798             -.3438
   .878                     -.4622
   .834     -.2799
   .839             -.3437
   .650                             -.2504  -.2242  -.2429
   .857                     -.2380
   .862                                                             -.2236
   .865     -.3254
   .879             -.2067
   .900     -.1692                  -.1205                  -.1535
   .905                     -.1228
   .919             -.1118
   .950                             -.0275  -.1212  -.0205
   .953                     -.0258
   .955             -.0377
   .965     -.0568
  1.000                      .0432           .0274          -.0191
ALPHA ( 1) =    -4.060    BETA  ( 3) =    4.272   MACH   =  .90163    Q     =  601.33    P     =  1056.6    RN/L   =  3.5806
 SECTION ( 1)LEFT WING BOT SURF                   DEPENDENT VARIABLE CP
2Y/BW       .2990   .3640   .4270   .5340   .6730   .7800   .8870   .9720
  X/CW
   .010      .0048  -.0068  -.1578 -1.0325 -1.2724 -1.0878  -.9612
   .020      .0000   .0064  -.2175 -1.0935 -1.2968 -1.1284  -.9353  -.6487
   .040              .0158  -.3091
   .050     -.0160                  -.7126 -1.2311 -1.1119  -.8661
   .059                                                             -.6171
   .080                             -.5402
   .081                     -.3081
   .085              .0319
   .094     -.0195
   .150                             -.4279  -.4995  -.8938  -.7844
   .157                                                             -.3899
   .163             -.0327
```

AMES 11-073(OA148) -140A/B/C/R ORB LEFT WING BOT (XE8L36)

ALPHA (1) = -4.060 BETA (3) = 4.272

SECTION (1)LEFT WING BOT SURF DEPENDENT VARIABLE CP

2Y/BW	.2990	.3640	.4270	.5340	.6730	.7800	.8870	.9720
X/CW								
.177			-.3043					
.229	.0146							
.246		-.2072						
.250				-.3221	-.3418	-.5589	-.7008	
.274			-.2734					
.345								-.4659
.390		-.2407						
.400				-.2342	-.2538		-.5232	
.402			-.2095					
.503								-.3936
.550				-.3030	-.3533			
.565			-.7616					
.600							-.3500	
.637		-.2744						
.650						-.3695		
.670								-.2718
.700					-.4561			
.725				-.4411				
.750						-.3907	-.3057	
.760			-.4157					
.775				-.4562	-.3151			
.798		-.3437						
.808			-.4329					
.834	-.3020							
.839		-.3368						
.850				-.2269	-.1765	-.2240		
.857			-.2213					
.862								-.1483
.865	-.3522							
.879		-.2063						
.900	-.2092			-.1065			-.1226	
.905			-.1090					
.919		-.1098						
.950				-.0132	-.0442	.0010		
.953			-.0182					
.955		-.0378						
.965	-.0576							
1.000			.0307		.0272		.0473	

REPRODUCIBILITY OF THE
ORIGINAL PAGE IS POOR

```
DATE 10 FEB 76            TABULATED PRESSURE DATA - OA148 ( AMES 11-073-1 )                                            PAGE 2059
                                    AMES 11-073(OA148) -140A/B/C/R ORB LEFT WING BOT                        (XEBL36)
ALPHA ( 2) =      .042   BETA  ( 1) =   -3.866   MACH   =  .90027    Q     =  600.16    P     =  1057.8    RN/L  =  3.5774
 SECTION ( 1)LEFT WING BOT SURF              DEPENDENT VARIABLE CP

2Y/BW      .2990    .3640    .4270    .5340    .6730    .7800    .8870    .9720
  X/CW
   .010    .0347    .0880    .1033   -.6519   -.8139   -.7421   -.6190
   .020    .0000    .0711   -.0059   -.5953   -.7412   -.7424   -.8772   -.2882
   .040             .0836   -.1691
   .050    .0062
   .069                              -.5200   -.5835   -.6561   -.7459
   .080                              -.3449                              -.3481
   .081                     -.1986
   .086             .0953
   .094   -.0104
   .150                              -.2131   -.2225   -.2530   -.2709
   .157
   .163             .0223                                                -.2396
   .177                     -.1809
   .229    .0257
   .246            -.1335
   .250                              -.1513   -.1996   -.2325   -.2740
   .274                     -.1248
   .345
   .390            -.1067                                                -.3086
   .400                              -.1294   -.1392            -.2014
   .402                     -.0866
   .503
   .550                              -.2025   -.2149                     -.3436
   .565                     -.8606
   .600
   .637            -.1899                                       -.3554
   .650
   .670                                                -.3226
   .700                                       -.3778                     -.3653
   .725                              -.3588
   .750                                                -.4256   -.4787
   .760                     -.3010
   .775                              -.4659   -.3807
   .798            -.2531
   .808                     -.5421
   .834   -.2675
   .839            -.4512
   .850                              -.2724   -.2590   -.1967
   .857                     -.2505
   .862
   .865   -.3963                                                         -.1371
   .877            -.2095
   .900   -.1791                     -.1158
   .905                     -.1111                              -.0908
   .919            -.1071
```

```
DATE 10 FEB 76          TABULATED PRESSURE DATA - OA148 ( AMES 11-073-1 )
                                  AMES 11-073(OA148) -140A/B/C/R ORB LEFT WING BOT                (XEBL36)

ALPHA ( 2) =     .042    BETA  ( 1) =   -3.866

 SECTION ( 1)LEFT WING BOT SURF            DEPENDENT VARIABLE CP

2Y/BW         .2990    .3640    .4270    .5340    .6730    .7800    .8870    .9720

  X/CW
    .950                                -.0235   -.1656   -.0120
    .953                       -.0097
    .955              -.0241
    .965     -.0340
   1.000                        .0465            -.0039             .0713
ALPHA ( 2) =     .092    BETA  ( 2) =     .183  MACH   =  .90027    Q      =  600.16    P      =  1057.8    RN/L   =  3.5774

 SECTION ( 1)LEFT WING BOT SURF            DEPENDENT VARIABLE CP

2Y/BW         .2990    .3640    .4270    .5340    .6730    .7800    .8870    .9720

  X/CW
    .010      .0267    .1076    .1872   -.4638   -.6368   -.6760   -.6057
    .020      .0000    .1104    .1064   -.4607   -.5615   -.6052   -.7535   -.3133
    .040               .1262   -.0529
    .050      .0149                     -.3581   -.4555   -.5320   -.6277
    .069                                                                    -.3263
    .080                                -.2827
    .081                       -.1207
    .086               .1317
    .094      .0144
    .150                                -.1834   -.2029   -.2290   -.3103
    .157                                                                    -.2597
    .163               .0750
    .177                       -.1325
    .229      .0469
    .246              -.0909
    .250                                -.1318   -.1809   -.2231   -.2689
    .274                       -.1065
    .345                                                                    -.3229
    .390              -.0888
    .400                                -.1268   -.1471            -.2195
    .402                       -.0877
    .503                                                                    -.3831
    .550                                -.2092   -.2261
    .565                       -.8558
    .600                                                           -.3769
    .637              -.1926
    .650                                                  -.3367
    .670                                                                    -.3210
    .700                                         -.3781
    .725                                -.3426
    .750                                                  -.4131   -.4599
    .760                       -.2794
```

AMES 11-073(OA148) -140A/B/C/R ORB LEFT WING BOT (XEBL36)

ALPHA (2) = .092 BETA (2) = .183

SECTION (1)LEFT WING BOT SURF DEPENDENT VARIABLE CP

2Y/BW	.2990	.3640	.4270	.5340	.6730	.7800	.8870	.9720
X/CW								
.775				-.4671	-.3535			
.798		-.2544						
.808			-.4884					
.834	-.2395							
.839		-.4202						
.850				-.2624	-.2298	-.1845		
.857			-.2711					
.862								-.0989
.865	-.3606							
.879		-.2293						
.900	-.2083			-.1074			-.0786	
.905			-.1193					
.919		-.1179						
.950				-.0114	-.1097	-.0146		
.953			-.0144					
.955		-.0318						
.965	-.0657							
1.000			.0479		.0194		.0745	

ALPHA (2) = .085 BETA (3) = 4.248 MACH = .90027 Q = 600.16 P = 1057.8 RN/L = 3.577

SECTION (1)LEFT WING BOT SURF DEPENDENT VARIABLE CP

2Y/BW	.2990	.3640	.4270	.5340	.6730	.7800	.8870	.9720
X/CW								
.010	-.0164	.0817	.2328	-.2792	-.4875	-.5420	-.5074	
.020	.0000	.1013	.1722	-.3362	-.4003	-.4644	-.5919	-.2808
.040		.1188	.0225					
.045	.0078			-.2384	-.3480	-.3870	-.4530	
.059								-.3184
.080				-.2111				
.081			-.0619					
.086		.1420						
.104	.0127							
.150				-.1473	-.1675	-.1993	-.2947	
.157								-.2630
.163		.1077						
.177			-.1019					
.229	.0470							
.245		-.0582						
.251				-.1233	-.1630	-.2031	-.2607	
.274			-.0922					
.345								-.3487
.393		-.0733						

```
                         AMES 11-073(OA148) -140A/B/C/R ORB LEFT WING BOT              (XE6L36)

ALPHA ( 2) =      .065    BETA  ( 3) =     4.248

 SECTION ( 1)LEFT WING BOT SURF               DEPENDENT VARIABLE CP

2Y/BW          .2990     .3640     .4270     .5340     .6730     .7800     .8870     .9720

  X/CW
      .400                                  -.1252    -.1462              -.2238
      .402                        -.0849
      .503                                                                          -.4070
      .550                                  -.2034    -.2337
      .565                        -.8763
      .600                                                                -.3907
      .637              -.1925
      .650                                                      -.3568
      .670                                                                          -.2765
      .700                                            -.3836
      .725                                  -.3545
      .750                                                      -.4258    -.5123
      .760                        -.3240
      .775                                  -.4802    -.3621
      .798              -.2762
      .808                        -.4751
      .824    -.2662
      .839              -.4199
      .850                                  -.2759    -.2164    -.1905
      .857                        -.3110
      .862                                                                          -.0728
      .865    -.3771
      .879              -.2672
      .900    -.2509                        -.1036                        -.0764
      .905                        -.1293
      .919              -.1277
      .950                                  -.0032    -.0679    -.0122
      .953                        -.0205
      .955              -.0459
      .965    -.0698
     1.000                         .0523               .0251               .0653
ALPHA ( 3) =     3.973    BETA  ( 1) =    -3.873   MACH    =   .89927     Q      =  599.24     P      =  1059.5     RN/L   =  3.57[illegible]

 SECTION ( 1)LEFT WING BOT SURF               DEPENDENT VARIABLE CP

2Y/BW          .2990     .3640     .4270     .5340     .6730     .7800     .8870     .9720

  X/CW
      .010     .0173     .1148     .3946     .1026     .0312     .1256     .1421
      .020     .0000     .1632     .3320    -.0198     .0097    -.0039    -.0116    -.1065
      .040               .1920     .1652
      .050     .0574                        -.0297    -.0502    -.0462    -.0547
      .069                                                                          -.1593
      .080                                  -.0297
```

AMES 11-073(OA148) -140A/B,C/R ORB LEFT WING BOT (XE8L36)

ALPHA (3) = 3.973 BETA (1) = -3.873

SECTION (1)LEFT WING BOT SURF DEPENDENT VARIABLE CP

2Y/BW	.2990	.3640	.4270	.5340	.6730	.7800	.8870	.9720
X/CW								
.081			.0608					
.086		.2244						
.094	.0540							
.150				.0035	-.0106	-.0107	-.0767	
.157								-.1877
.163		.1939						
.177			.0218					
.229	.0956							
.246		.0392						
.250				.0073	-.0295	-.0472	-.1044	
.274			.0285					
.345								-.2392
.390		.0305						
.400				-.0197	-.0286		-.1179	
.402			.0162					
.503								-.2989
.550				-.1204	-.1417			
.555			-.9353					
.600							-.2980	
.637		-.1064						
.650						-.2772		
.675								-.3972
.700					-.3201			
.725				-.2942				
.750						-.4120	-.4724	
.760			-.2049					
.775				-.4048	-.3679			
.798		-.1714						
.809			-.4825					
.834	-.1901							
.840		-.4584						
.850				-.5154	-.3935	-.5826		
.857			-.4539					
.862								-.3712
.865	-.3883							
.879		-.3505						
.900	-.2579			-.1365			-.5852	
.905			-.1333					
.919		-.1283						
.950				-.0069	-.1592	-.0831		
.953			-.0056					
.955		-.0241						
.965	-.0504							
1.000			.0804		.0415		-.0282	

```
                                     AMES 11-073(OA148) -140A/B/C/R ORB LEFT WING BOT                    (EES.DS)

ALPHA ( 3) =     3.981    BETA  ( 2) =      .185   MACH    =  .89927     Q      =  599.24     P      =  [illegible]5       [illegible]  =  [illegible].5740

 SECTION ( 1)LEFT WING BOT SURF                DEPENDENT VARIABLE CP

2Y/BW        .2993    .3640    .4270    .5340    .6730    .7800    .8870    .9720

 X/CW
    .010    -.0818   -.0076    .3644    .1897    .0892    .1557    .1556
    .020     .0000    .0918    .3441    .0723    .0520    .0440    .0150   -.2137
    .040              .1355    .2074
    .050     .0200                      .0341   -.0092   -.0175   -.0357
    .069                                                                   -.2362
    .080                                .0099
    .081                       .0365
    .085              .2095
    .094     .0416
    .150                                .0195    .0018   -.0099   -.0872
    .157                                                                   -.2135
    .163              .2038
    .177                       .0433
    .229     .0875
    .246              .0550
    .240                                .0122   -.0220   -.0454   -.1191
    .274                       .0303
    .345                                                                   -.2990
    .300              .0371
    .400                               -.0250   -.0355            -.1392
    .402                       .0121
    .503                                                                   -.3548
    .550                               -.1257   -.1495
    .565                      -.9289
    .600                                                          -.3164
    .637             -.1022
    .650                                                 -.2969
    .670                                                                   -.4414
    .700                                        -.3082
    .725                               -.2748
    .750                                                 -.4023   -.4870
    .760                      -.2169
    .775                               -.4237   -.3682
    .798             -.1854
    .809                      -.4756
    .934    -.2029
    .839             -.4234
    .850                               -.4561   -.3857   -.5948
    .857                      -.4682
    .862                                                                   -.2799
    .865    -.3604
    .879             -.3435
 [illegible]   -.2559                      -.1255                     -.5159
 [illegible]                  -.1430
    .919             -.1465
```

```
                              AMES 11-073(OA148) -140A/B/C/R ORB LEFT WING BOT              (XE8L36)
ALPHA ( 3) =    3.981    BETA  ( 2) =     .185
 SECTION ( 1)LEFT WING BOT SURF              DEPENDENT VARIABLE CP

2Y/BW      .2990    .3640    .4270    .5340    .6730    .7800    .8870    .9720

 X/CW
    .950                              -.0038   -.0946   -.0572
    .953                     -.0154
    .955            -.0146
    .965   -.0932
   1.000                      .0823             .0534            -.0209

ALPHA ( 3) =    3.986    BETA  ( 3) =    4.242   MACH    =  .89927     Q      =  599.24     P      =  1058.5     RN/L   =  3.5740
 SECTION ( 1)LEFT WING BOT SURF              DEPENDENT VARIABLE CP

2Y/BW      .2990    .3540    .4270    .5340    .6730    .7800    .8870    .9720

 X/CW
    .010   -.2135   -.1674    .2957    .2498    .1551    .2119    .1947
    .020    .0000   -.0178    .3196    .1357    .1051    .0984    .0745   -.3715
    .040             .0368    .2278
    .050   -.0364                      .0881    .0340    .0248    .0036
    .069                                                                  -.3322
    .080                               .0513
    .081                      .1295
    .086             .1720
    .094    .0056
    .150                               .0348    .0190    .0057   -.0816
    .157                                                                  -.2669
    .163             .2146
    .177                      .0687
    .229    .0709
    .246             .0695
    .250                               .0183   -.0132   -.0367   -.1242
    .274                      .0379
    .345                                                                  -.3662
    .390             .0453
    .400                              -.0268   -.0340            -.1550
    .402                      .0105
    .503                                                                  -.4039
    .550                              -.1244   -.1512
    .565                     -.9423
    .600                                                         -.3355
    .637            -.1095
    .650                                                -.3064
    .670                                                                  -.4460
    .700                                       -.2939
    .725                              -.2781
    .750                                                -.3920   -.4929
    .760                     -.2634
```

```
                         AMES 11-073(OA148) -140A/B/C/R ORB LEFT WING BOT          (XEBL36)

ALPHA ( 3) =    3.996    BETA  ( 3) =    4.242

 SECTION ( 1)LEFT WING BOT SURF            DEPENDENT VARIABLE CP

2Y/BW        .2990   .3640   .4270   .5340   .6730   .7800   .8870   .9720

  X/CW
    .775                             -.4233  -.3691
    .798             -.2145
    .808                     -.4473
    .834     -.2190
    .839             -.4004
    .850                             -.4240  -.3206  -.5884
    .857                     -.4099
    .862                                                             -.1975
    .865     -.3653
    .879             -.3164
    .900     -.2741                  -.1227                  -.2468
    .905                     -.1602
    .919             -.1557
    .950                             -.0022  -.0574  -.0520
    .953                     -.0279
    .955             -.0606
    .965     -.1003
   1.000                      .0701           .0417          -.0042
ALPHA ( 4) =    8.050    BETA  ( 1) =   -3.862   MACH   =  .89970    Q     =  599.92    P     =  1058.7    RN/L   =  3.578

 SECTION ( 1)LEFT WING BOT SURF            DEPENDENT VARIABLE CP

2Y/BW        .2990   .3640   .4270   .5340   .6730   .7800   .8870   .9720

  X/CW
    .010     -.1777  -.1882   .4101   .5056   .4619   .5096   .4747
    .020      .0000   .0478   .4637   .3859   .3888   .3897   .3673  -.2831
    .040              .1179   .3844
    .050      .0356                   .2777   .2668   .2762   .2470
    .069                                                             -.2061
    .080                              .2236
    .081                      .2703
    .086              .2833
    .094      .0803
    .150                              .1916   .1896   .1894   .1046
    .157                                                             -.1938
    .163              .3291
    .177                      .1898
    .229      .1590
    .246              .1890
    .250                              .1503   .1367   .1129   .0385
    .274                      .1567
    .345                                                             -.2186
    .390              .1536
```

```
DATE 10 FEB 76              TABULATED PRESSURE DATA - OA148 ( AMES 11-073-1 )                                          PAGE 2067

                                      AMES 11-073(OA148) -140A/B/C/R ORB LEFT WING BOT                (XE8L36)

ALPHA ( 4) =     8.050    BETA  ( 1  =    -3.862

 SECTION ( 1)LEFT WING BOT SURF               DEPENDENT VARIABLE CP

2Y/BW        .2990   .3640   .4270   .5340   .6730   .7800   .8870   .9720

  X/CW
    .400                             .0892   .0831           -.0262
    .402                     .1238
    .503                                                             -.2622
    .550                            -.0317  -.0547
    .565                    -.6571
    .600                                                     -.2269
    .637            -.0245
    .650                                            -.1890
    .670                                                             -.3385
    .700                                    -.2397
    .725                            -.2045
    .750                                            -.3289  -.4087
    .760                    -.2078
    .775                            -.3702  -.3653
    .798            -.1701
    .808                    -.4282
    .834   -.1916
    .839            -.4297
    .850                            -.5600  -.4800  -.5343
    .857                    -.4981
    .862                                                             -.4225
    .865   -.3825
    .879            -.4205
    .900   -.2731                   -.3291                   -.5682
    .905                    -.2558
    .919            -.1978
    .950                            -.0537  -.2780  -.6195
    .953                    -.0491
    .955            -.0709
    .965   -.1026
   1.000                     .0768           -.1153          -.3270
ALPHA ( 4) =     8.064    BETA  ( 2) =     .184   MACH   =  .89970     Q      =  599.92     P      =  1058.7     RN/L   =  3.5781

 SECTION ( 1)LEFT WING BOT SURF               DEPENDENT VARIABLE CP

2Y/BW        .2990   .3640   .4270   .5340   .6730   .7800   .8870   .9720

  X/CW
    .010   -.3659  -.3954   .2616   .4985   .4438   .4695   .4207
    .020    .0000  -.0987   .3808   .4008   .3869   .3772   .3438  -.4070
    .040            -.0145   .3695
    .050   -.0419                    .3027   .2781   .2700   .2447
    .069                                                             -.2875
    .080                             .2477
```

```
                         AMES 11-073(OA148) -140A/B/C/R ORB LEFT WING BOT          (XE8L36)

ALPHA ( 4) =    8.064   BETA  ( 2) =     .184

 SECTION ( 1)LEFT WING BOT SURF              DEPENDENT VARIABLE CP

2Y/BW       .2990    .3640    .4270    .5340    .6730    .7800    .8870    .9720

  X/CW
   .081                       .2777
   .086              .2214
   .094     .0326
   .150                                .1943    .1881    .1754    .0862
   .157                                                                    -.2027
   .163              .3205
   .177                       .2017
   .200     .1307
   .246              .1917
   .250                                .1482    .1334    .1029    .0139
   .274                       .1599
   .345                                                                    -.2119
   .390              .1608
   .400                                .0868    .0727             -.0494
   .402                       .1209
   .503                                                                    -.2646
   .550                               -.0328   -.0649
   .555                      -.6552
   .600                                                           -.2431
   .637             -.0180
   .650                                                  -.1934
   .670                                                                    -.3939
   .700                                        -.2422
   .725                               -.2183
   .750                                                  -.3395   -.4139
   .760                      -.2287
   .775                               -.3715   -.3841
   .798             -.1826
   .808                      -.4121
   .834    -.1909
   .839             -.3948
   .850                               -.5595   -.5050   -.5399
   .857                      -.4390
   .862                                                                    -.4897
   .866    -.3646
   .879             -.3901
   .900    -.2685                     -.3795                      -.6019
   .905                      -.2726
   .919             -.2518
   .950                               -.0695   -.2387   -.6504
   .953                      -.0604
   .955             -.0906
   .965    -.1359
  1.000                       .0713             -.0810            -.4271
```

REPRODUCIBILITY OF THE
ORIGINAL PAGE IS POOR

DATE 10 FEB 76 TABULATED PRESSURE DATA - OA148 (AMES 11-073-1)

AMES 11-073(OA148) -140A/B/C/R ORB LEFT WING BOT (XE8L36)

ALPHA (4) = 8.061 BETA (3) = 4.239 MACH = .89970 Q = 599.92 P = 1058.7 RN/L = 3.5781

SECTION (1)LEFT WING BOT SURF DEPENDENT VARIABLE CP

2Y/BW X/CW	.2990	.3640	.4270	.5340	.6730	.7800	.8870	.9720
.010	-.5487	-.3479	.0852	.4558	.4080	.3990	.3536	
.020	.0000	-.1771	.2537	.3920	.3602	.3517	.3045	-.4992
.040		-.1009	.3143					
.050	-.1292			.3085	.2656	.2586	.2182	
.063								-.3812
.080				.2514				
.081			.2585					
.086		.1377						
.094	-.0329							
.150				.1900	.1836	.1680	.0713	
.157								-.2413
.163		.2766						
.177			.1329					
.229	.0925							
.246		.1661						
.250				.1340	.1232	.1017	.0008	
.274			.1510					
.345								-.2749
.390		.1489						
.400				.0693	.0613		-.0693	
.402			.1032					
.503								-.3156
.550				-.0424	-.0673			
.565			-.6901					
.600							-.2614	
.637		-.0283						
.650						-.1992		
.670								-.4461
.700					-.2450			
.725				-.2233				
.753						-.3418	-.4074	
.760			-.2472					
.775				-.3794	-.3812			
.798		-.2015						
.808			-.4122					
.834	-.2088							
.839		-.3751						
.850				-.5364	-.5020	-.5439		
.857			-.4347					
.862								-.5359
.875	-.3594							
.879		-.3727						
.900	-.3395			-.3310			-.6217	
.905			-.3930					
.919		-.2868						

```
                                         AMES 11-073(OA148) -140A/B/C/R ORB LEFT WING BOT              (XEBL36)

ALPHA ( 4) =     8.061    BETA  ( 3) =     4.239

 SECTION ( 1)LEFT WING BOT SURF              DEPENDENT VARIABLE CP

2Y/BW         .2990     .3640     .4270     .5340     .6730     .7800     .8870     .9720

  X/CW
    .950                                   -.0769    -.2285    -.6571
    .953                         -.0943
    .955               -.1112
    .965     -.1513
   1.000                          .0336              -.0552              -.4447

ALPHA ( 5) =    11.931    BETA  ( 1) =    -3.854   MACH   =   .89977     Q      =  600.28     P      =  1059.2     RN/L   =  3.5929

 SECTION ( 1)LEFT WING BOT SURF              DEPENDENT VARIABLE CP

2Y/BW         .2990     .3640     .4270     .5340     .6730     .7800     .8870     .9720

  X/CW
    .010     -.4711    -.5557     .2049     .6301     .6033     .5850     .5280
    .020      .0000    -.1379     .4165     .5726     .5701     .5549     .5046    -.3637
    .040               -.0273     .4834
    .050     -.0148                         .4728     .4672     .4555     .4158
    .069                                                                           -.2222
    .080                                    .4059
    .061                          .4113
    .086                .2776
    .094      .0776
    .150                                    .3350     .3390     .3292     .2466
    .157                                                                           -.1839
    .163                .4172
    .177                          .3240
    .229      .2043
    .246                .3019
    .250                                    .2705     .2621     .2400     .1569
    .274                          .2698
    .345                                                                           -.1406
    .390                .2559
    .400                                    .1857     .1766               .0654
    .402                          .2179
    .503                                                                           -.2085
    .550                                    .0566     .0293
    .565                         -.6256
    .600                                                                 -.1655
    .637                .0566
    .650                                                       -.1356
    .670                                                                           -.3660
    .700                                              -.2100
    .725                                   -.1797
    .750                                                       -.2826    -.3396
    .760                         -.2335
```

```
DATE 10 FEB 76            TABULATED PRESSURE DATA - OA148 ( AMES 11-073-1 )

                                AMES 11-073(OA148) -140A/B/C/R ORB LEFT WING BOT              (XE8L36)
ALPHA ( 5) =    11.931    BETA  ( 1) =    -3.854
 SECTION ( 1)LEFT WING BOT SURF                   DEPENDENT VARIABLE CP
2Y/BW        .2990    .3640    .4270    .5340    .6730    .7800    .8870    .9720
  X/CW
   .775                                -.3141   -.3396
   .798               -.1961
   .808                        -.3533
   .834     -.2170
   .839               -.3789
   .850                                -.4836   -.5422   -.5104
   .857                        -.3795
   .862                                                                    -.5021
   .865     -.3647
   .879               -.3840
   .900     -.2793                     -.5988                     -.5590
   .905                        -.4989
   .919               -.4050
   .950                                -.5629   -.5419   -.6187
   .953                        -.2571
   .955               -.1854
   .965     -.1681
  1.000                        -.0077            -.3127            -.5168
ALPHA ( 5) =    11.945    BETA  ( 2) =     .188   MACH   =  .89977    Q    =  600.28    P    =  1059.2    RN/L  =  3.5829
 SECTION ( 1)LEFT WING BOT SURF                   DEPENDENT VARIABLE CP
2Y/BW        .2990    .3640    .4270    .5340    .6730    .7800    .8870    .9720
  X/CW
   .010     -.6848   -.4173   -.0111    .5466    .5249    .4758    .4144
   .020      .0000   -.2080    .2583    .5303    .5152    .4948    .4280   -.5406
   .040              -.1147    .4119
   .050     -.1172                      .4540    .4457    .4213    .3595
   .059                                                                    -.3679
   .080                                 .3928
   .081                         .3819
   .086               .1897
   .094      .0067
   .150                                 .3214    .3246    .3110    .2065
   .157                                                                    -.2488
   .163               .3711
   .177                         .3160
   .229      .1652
   .246               .2747
   .250                                 .2592    .2460    .2194    .1255
   .274                         .2633
[illegible]                                                                -.2223
[illegible]           .2502
```

```
                                AMES 11-073(OA148) -140A/B/C/R ORB LEFT WING BOT          (XE8L36)
ALPHA ( 5) =   11.945    BETA  ( 2) =      .188
 SECTION ( 1)LEFT WING BOT SURF                DEPENDENT VARIABLE CP
2Y/BW       .2990   .3640   .4270   .5340   .6730   .7800   .8870   .9720
  X/CW
    .400                            .1762   .1618           .0305
    .402                    .2066
    .503                                                            -.2853
    .550                            .0465   .0137
    .565                   -.6354
    .600                                                   -.2008
    .637            .0522
    .650                                           -.1500
    .670                                                            -.4146
    .700                                   -.2122
    .725                           -.1818
    .750                                           -.2932  -.3542
    .760                   -.2363
    .775                           -.3210  -.3495
    .798           -.1928
    .808                   -.3653
    .834   -.2092
    .839           -.3618
    .850                           -.4841  -.5512  -.4975
    .857                   -.3764
    .862                                                            -.5551
    .865   -.3505
    .879           -.3795
    .900   -.2995                  -.5909                  -.5855
    .905                   -.5113
    .919           -.4151
    .950                           -.4647  -.5302  -.6597
    .953                   -.3081
    .975           -.2277
    .985   -.1719
   1.000                   -.0442          -.2557          -.5427
ALPHA ( 5) =   11.935    BETA  ( 3) =    4.259   MACH   =  .89977    Q     =  60[illegible].28   P     =  1059.2   RN/L   =  [illegible].3529
 SECTION ( 1)LEFT WING BOT SURF                DEPENDENT VARIABLE CP
2Y/BW       .2990   .3640   .4270   .5340   .6730   .7800   .8870   .9720
  X/CW
    .010   -.8015  -.3897  -.2274   .4404   .4257   .3456   .3001
    .020    .0000  -.3128   .0908   .4632   .4465   .4196   .3504  -.6925
    .040           -.2200   .3165
    .050   -.2196                   .4115   .4103   .3747   .3167
    .059                                                           -.4827
    .080                            .3620
```

AMES 11-073(OA148) -140A/B/C/R ORB LEFT WING BOT (XE8L36)

ALPHA (5) = 11.935 BETA (3) = 4.259

SECTION (1)LEFT WING BOT SURF DEPENDENT VARIABLE CP

2Y/BW	.2990	3640	.4270	.5340	.6730	.7800	.8870	.9720
X/CW								
.081			.3334					
.086		.1037						
.094	-.0692							
.150				.2965	.2975	.2848	.1720	
.157								-.2957
.163		.3114						
.177			.2953					
.229	.1121							
.246		.2419						
.250				.2371	.2231	.2000	.0969	
.274			.2465					
.345								-.3002
.390		.2300						
.400				.1568	.1473		.0024	
.402			.1878					
.503								-.3431
.550				.0322	.0020			
.565			-.6038					
.600							-.2291	
.637		.0426						
.650						-.1673		
.670								-.4599
.700					-.2235			
.725				-.1910				
.750						-.3049	-.3661	
.760			-.2459					
.775				-.3268	-.3520			
.792		-.2161						
.808			-.3591					
.834	-.2235							
.839		-.3481						
.850				-.4556	-.5489	-.4881		
.857			-.3732					
.862								-.6192
.865	-.3468							
.873		-.3932						
.900	-.3442			-.6025			-.6001	
.905			-.5136					
[illegible]		-.4289						
.940				-.5170	-.5546	-.6566		
.953			-.4317					
[illegible]		-.2979						
[illegible]	-.2203							
[illegible]			-.0787		-.2388		-.5708	

```
                                      AMES 11-073(OA148) -140A/B/C/R ORB LEFT WING BOT              (XE8L37)   ( 05 AUG 75  )

               REFERENCE DATA                                                                       PARAMETRIC DATA

SREF  =  2690.0000 SQ.FT.   XMRP  =  1076.6800 IN. XO                                  RUDDER =    10.000   SPDBRK =     35.000
LREF  =   474.8000 IN.      YMRP  =      .0000 IN. YO                                  BDFLAP =    16.300   L-ELVN =       .000
BREF  =   936.0680 IN.      ZMRP  =   375.0000 IN. ZO                                  R-ELVN =    10.000   MACH   =       .600
SCALE =      .0300

ALPHA ( 1) =   -4.041    BETA  ( 1) =   -7.848   MACH    =   .59694     Q      =  595.14     P      =  2385.9     RN/L    =  4.8726

 SECTION ( 1)LEFT WING BOT SURF               DEPENDENT VARIABLE CP

2Y/BW        .2990    .3640    .4270    .5340    .6730    .7800    .8870    .9720

 X/CW
   .010    -.2889   -.6413  -1.0543  -2.1372  -2.0333  -1.7088  -1.6587
   .020     .0000   -.5643  -1.1430  -1.9811  -2.0073  -1.4085  -1.6417   -.9837
   .040             -.5239   -.9688
   .050    -.2445                     -.9348  -1.0096  -1.1396  -1.1302
   .069                                                                   -.8441
   .080                               -.7013
   .081                      -.6133
   .086             -.3293
   .094    -.2204
   .150                               -.4449   -.4735   -.5437   -.5152
   .157                                                                   -.3374
   .163             -.3685
   .177                      -.3743
   .229    -.1803
   .246             -.3647
   .250                               -.2956   -.3315   -.3695   -.3573
   .274                      -.2669
   .345                                                                   -.3688
   .390             -.2298
   .400                               -.2091   -.2196            -.2590
   .402                      -.1790
   .503                                                                   -.3511
   .550                               -.2184   -.2276
   .565                      -.2204
   .600                                                          -.2647
   .637             -.2048
   .650                                                 -.2350
   .670                                                                   -.3473
   .700                                        -.2373
   .725                               -.2155
   .750                                                 -.3125   -.3083
   .760                      -.2239
   .775                               -.3374   -.2514
   .798             -.1858
   .808                      -.3173
   .834    -.1786
   .839             -.2698
   .850                               -.2414   -.2210   -.2078
```

DATE 10 FEB 76 TABULATED PRESSURE DATA - OA148 (AMES 11-073-1)

AMES 11-073(OA148) -140A/B/C/R ORB LEFT WING BOT (XEBL37)

ALPHA (1) = -4.041 BETA (1) = -7.848

SECTION (1)LEFT WING BOT SURF DEPENDENT VARIABLE CP

2Y/BW	.2990	.3640	.4270	.5340	.6730	.7800	.8870	.9720
X/CW								
.857			-.2204					
.862								-.2394
.865	-.2600							
.879		-.1977						
.900	-.1343			-.1633			-.1431	
.905			-.1543					
.919		-.1282						
.950				-.0585	-.1574	-.0465		
.953			-.0455					
.955		-.0555						
.965	-.0331							
1.000			.0538		-.0406		.0337	

ALPHA (1) = -4.025 BETA (2) = -3.846 MACH = .59694 Q = 595.14 P = 2385.8 RN/L = 4.8726

SECTION (1)LEFT WING BOT SURF DEPENDENT VARIABLE CP

2Y/BW	.2990	.3640	.4270	.5340	.6730	.7800	.8870	.9720
X/CW								
.010	-.1931	-.4374	-.7914	-2.0230	-2.1036	-1.9881	-1.7972	
.020	.0000	-.3751	-.8606	-1.7054	-1.9079	-1.5100	-1.7441	-.8714
.040		-.3381	-.7464					
.050	-.1753			-.8681	-.9148	-1.0501	-1.0791	
.069								-.7637
.080				-.6429				
.081			-.5219					
.086		-.2264						
.094	-.1574							
.140				-.3795	-.4339	-.4091	-.4072	
.157								-.3065
.163		-.2769						
.177			-.3350					
.229	-.1207							
.246		-.3146						
.250				-.2716	-.3164	-.3451	-.3379	
.274			-.2424					
.345								-.3268
.390		-.2116						
.400				-.1993	-.2200		-.2472	
.402			-.1704					
.503								-.3157
.550				-.2152	-.2251			
.565			-.1972					
.600							-.2566	

```
                                      AMES 11-073(OA148) -140A/B/C/R ORB LEFT WING BOT              (XEBL37)

ALPHA ( 1) =    -4.025    BETA  ( 2) =    -3.846

 SECTION ( 1)LEFT WING BOT SURF              DEPENDENT VARIABLE CP

2Y/BW         .2990   .3640   .4270   .5340   .6730   .7800   .8870   .9720

  X/CW
    .637              -.2012
    .650                                              -.2331
    .670                                                              -.3177
    .700                                      -.2390
    .725                              -.2154
    .750                                              -.3161  -.3039
    .760                      -.2261
    .775                              -.3626  -.2547
    .798              -.1929
    .808                      -.3243
    .834      -.1927
    .839              -.2776
    .850                              -.2427  -.2117  -.2195
    .857                      -.2232
    .862                                                              -.2271
    .865      -.2640
    .879              -.1996
    .900      -.1460                  -.1650                  -.1465
    .905                      -.1571
    .919              -.1394
    .950                              -.0546  -.1498  -.0465
     953                      -.0529
    .955              -.0659
    .965      -.0697
   1.000                       .0546          -.0126           .0376
ALPHA ( 1) =    -3.896    BETA  ( 3) =     .184   MACH   =  .59694     Q       =  595.14      P       =  2333.8     RN/L    =  4.8726

 SECTION ( 1)LEFT WING BOT SURF              DEPENDENT VARIABLE CP

2Y/BW         .2990   .3640   .4270   .5340   .6730   .7800   .8870   .9720

  X/CW
    .010      -.0907  -.2078  -.5226 -1.7044 -1.8327 -2.1754 -1.9736
    .020       .0000  -.1866  -.5306 -1.2852 -1.4488 -1.6115 -1.8061  -.7548
    .040              -.1633  -.5425
    .050      -.0953                  -.7426  -.8245  -.8803  -.9238
    .069                                                              -.5720
    .080                              -.5566
    .081                      -.4149
    .085              -.1168
    .094      -.0305
    .150                              -.3491  -.3870  -.4205  -.4255
    .157                                                              -.2779
    .163              -.1847
```

AMES 11-073(OA148) -140A/B/C/R ORB LEFT WING BOT (XE6L37)

ALPHA (1) = -3.896 BETA (3) = .184

SECTION (1)LEFT WING BOT SURF DEPENDENT VARIABLE CP

2Y/BW	.2930	.3640	.4270	.5340	.6730	.7800	.8870	.9720
X/CW								
.177			-.2869					
.229	-.0685							
.245		-.2589						
.250				-.2438	-.2889	-.3137	-.3079	
.274			-.2189					
.345								-.2841
.390		-.1852						
.400				-.1855	-.2044		-.2268	
.402			-.1563					
.503								-.2820
.550				-.2059	-.2156			
.565			-.1731					
.600							-.2448	
.637		-.1915						
.650						-.2242		
.670								-.2891
.700					-.2342			
.725				-.2149				
.750						-.3017	-.2902	
.760			-.2236					
.775				-.3356	-.2494			
.799		-.1927						
.808			-.3194					
.834	-.1809							
.833		-.2679						
.850				-.2424	-.1999	-.2124		
.857			-.2302					
.862								-.2122
.865	-.2644							
.873		-.2057						
.900	-.1601			-.1638			-.1350	
.905			-.1605					
.913		-.1455						
.940				-.0527	-.1283	-.0371		
.952			-.0550					
.955		-.0751						
.975	-.0965							
1.000			.0557		.0109		.0474	

```
                                  AMES 11-073(OA148) -140A/B/C/R ORB LEFT WING BOT            (XE8L37)

ALPHA ( 1) =   -3.930    BETA  ( 4) =    4.266   MACH   =  .59694     Q      =  595.14     P      =  2385.8    RN/L   =  4.3725

 SECTION ( 1)LEFT WING BOT SURF            DEPENDENT VARIABLE CP

2Y/BW        .2990   .3640   .4270   .5340   .6730   .7800   .8870   .9720

  X/CW
    .010   -.0392  -.0810  -.3112 -1.3514 -1.5060 -1.8854 -1.7513
    .020    .0000  -.0721  -.3745 -1.0827 -1.1602 -1.2780 -1.5783  -.5604
    .040           -.0555  -.3357
    .050   -.0542                  -.6165  -.7004  -.7824  -.8128
    .059                                                            -.4196
    .080                           -.4729
    .091                   -.3252
    .095           -.0402
    .034   -.0551
    .150                           -.3046  -.3398  -.3711  -.3771
    .157                                                            -.2349
    .163           -.1134
    .177                   -.2406
    .229   -.0393
    .246           -.2041
    .250                           -.2206  -.2567  -.2816  -.2823
    .274                   -.1892
    .345                                                            -.2353
    .390           -.1580
    .400                           -.1698  -.1914          -.2079
    .402                   -.1502
    .503                                                            -.2339
    .550                           -.1955  -.2032
    .565                   -.1998
    .600                                                   -.2287
    .637           -.1807
    .650                                           -.2165
    .670                                                            -.2439
    .700                                   -.2309
    .725                           -.2121
    .750                                           -.2884  -.2736
    .760                   -.2297
    .775                           -.3635  -.2436
    .788           -.1913
    .809                   -.2993
    .834   -.1856
    .839           -.2632
    .850                           -.2332  -.1806  -.2059
    .857                   -.2202
    .862                                                            -.1574
    .865   -.2667
    .879           -.2010
    .900   -.1725                  -.1552                  -.1196
[illegible]                -.1009
[illegible]        -.1445
```

```
                                   AMES 11-073(OA148) -140A/B/C/R ORB LEFT WING BOT                (XEBL37)

ALPHA ( 1) =    -3.930    BETA  ( 4) =    4.266

 SECTION ( 1)LEFT WING BOT SURF                 DEPENDENT VARIABLE CP

2Y/BW        .2990    .3640   .4270    .5340    .6730    .7800    .8870    .9720

  X/CW
   .950                                -.0463   -.1132   -.0343
   .953                       -.0573
   .955              -.0755
   .965    -.1124
  1.000                        .0514             .0293             .0670

ALPHA ( 1) =   -3.946     BETA  ( 5) =    8.339    MACH   =   .59694      Q      =  595.14      P      =  2385.8      RN/L   =  4.8726

 SECTION ( 1)LEFT WING BOT SURF                 DEPENDENT VARIABLE CP

2Y/BW        .2990    .36 0   .4270    .5340    .6730    .7800    .8870    .9720

  X/CW
   .010    -.0206    .0236   -.0978   -.9673  -1.1883  -1.4932  -1.4480
   .020     .0000    .0199   -.1602   -.8130   -.8896  -1.0243  -1.3241   -.4414
   .040              .0290   -.2330
   .050    -.0281                     -.4803   -.5775   -.6681   -.7164
   .069                                                                    -.3374
   .080                               -.3820
   .081                      -.2307
   .085              .0231
   .094    -.0284
   .150                               -.2577   -.2873   -.3180   -.3435
   .157                                                                    -.2156
   .163             -.0429
   .177                      -.1885
   .229    -.0120
   .246             -.1504
   .250                               -.1906   -.2278   -.2538   -.2487
   .274                      -.1616
   .345                                                                    -.1904
   .350             -.1344
   .400                               -.1563   -.1714            -.1834
   .402                      -.1320
   .503                                                                    -.1942
 [illegible]                          -.1830   -.1940
 [illegible]                 -.2371
 [illegible]                                                      -.2130
 [illegible]        -.1710
 [illegible]                                             -.2047
 [illegible]                                                               -.1975
 [illegible]                                    -.2195
 [illegible]                          -.2079
 [illegible]                                             -.2712   -.2518
 [illegible]                 -.2124
```

```
                                      AMES 11-073(OA148) -140A/B/C/R ORB LEFT WING BOT               XE8L37)
ALPHA ( 1) =    -3.946    BETA  ( 5) =     8.339

 SECTION ( 1)LEFT WING BOT SURF                   DEPENDENT VARIABLE CP

2Y/BW        .2990   .3640   .4270   .5340   .6730   .7800   .8870   .9720

  X/CW
    .775                             -.3558  -.2306
    .798            -.1853
    .808                    -.2878
    .834   -.1870
    .839            -.2629
    .850                             -.2278  -.1698  -.2028
    .857                    -.2186
    .862
    .865   -.2594                                                    -.1064
    .879            -.2109
    .900   -.1759                    -.1477                  -.1059
    .905                    -.1536
    .919            -.1552
    .950                             -.0375  -.0819  -.0311
    .953                    -.0608
    .955            -.0865
    .965   -.1188
   1.000                     .0462            .0498           .0772
ALPHA ( 2) =      .030    BETA  ( 1) =    -7.898   MACH   =  .59652     Q      =  594.31     P      =  2385.8     RN/L   =  4.8794

 SECTION ( 1)LEFT WING BOT SURF                   DEPENDENT VARIABLE CP

2Y/BW        .2990   .3640   .4270   .5340   .6730   .7800   .8870   .9720

  X/CW
    .010    .0001  -.0294  -.1400  -.8875  -.9311  -.8605  -.7063
    .020    .0000  -.0618  -.2748  -.8131  -.7073  -.7670  -.7766  -.2133
    .040           -.0632  -.3598
    .050   -.0453                  -.4816  -.4868  -.5145  -.4892
    .069                                                           -.1825
    .080                           -.3746
    .081                   -.2846
    .086           -.0327
    .094   -.0598
    .150                           -.2227  -.2244  -.2231  -.2353
    .157                                                           -.1830
    .163           -.1085
    .177                   -.1874
    .229   -.0484
    .246           -.1760
    .250                           -.1500  -.1773  -.1865  -.1868
    .274                   -.1362
    .345                                                           -.1744
    .390           -.1078
```

```
DATE 10 FEB 75              TABULATED PRESSURE DATA - OA148 ( AMES 11-073-1 )                                          PAGE 2081

                                      AMES 11-073(OA148) -140A/B/C/R ORB LEFT WING BOT                        (XE8L37)
ALPHA ( 2) =      .030    BETA  ( 1) =   -7.898

 SECTION ( 1)LEFT WING BOT SURF                   DEPENDENT VARIABLE CP

2Y/BW        .2990    .3640    .4270    .5340    .6730    .7800    .8870    .9720

  X/CW
   .400                                 -.1198   -.1253            -.1494
   .402                        -.0901
   .503                                                                     -.2061
   .550                                 -.1593   -.1670
   .565                        -.2675
   .600                                                            -.2126
   .637               -.1557
   .650                                                   -.1957
   .670                                                                     -.2399
   .700                                          -.2075
   .725                                 -.1904
   .750                                                   -.2930   -.2654
   .760                        -.1960
   .775                                 -.3205   -.2315
   .798               -.1664
   .809                        -.2986
   .834      -.1565
   .839               -.2549
   .850                                 -.2294   -.2042   -.2103
   .857                        -.2060
   .862                                                                     -.1577
   .865      -.2511
   .873               -.1881
   .900      -.1152                     -.1539                     -.1357
   .905                        -.1419
   .919               -.1175
   .940                                 -.0416   -.1359   -.0377
   .943                        -.0288
   .945               -.0398
   .955      -.0185
  1.000                         .0735             -.0133             .0629
ALPHA ( 2) =      .040    BETA  ( 2) =   -3.863  MACH   =  .59652    Q     =  594.31    P     =  2385.8    RN/L  =  4.8794

 SECTION ( 1)LEFT WING BOT SURF                   DEPENDENT VARIABLE CP

2Y/BW        .2390    .3640    .4270    .5340    .6730    .7800    .8870    .9720

  X/CW
   .010       .0187    .0419   -.0082   -.6991   -.7398   -.7160   -.6035
   .020       .0000    .0126   -.1165   -.6590   -.5767   -.6260   -.6873   -.1820
   .040                .0192   -.2401
   .050      -.0157                     -.3951   -.4074   -.4470   -.4408
[illegible]                                                                 -.1666
[illegible]                             -.3112
```

AMES 11-073(OA148) -140A/B/C/R ORB LEFT WING BOT (XESLIT)

ALPHA (2) = .040 BETA (2) = -3.863

SECTION (1)LEFT WING BOT SURF DEPENDENT VARIABLE CP

2Y/BW	.2990	.3640	.4270	.5340	.6730	.7800	.8870	.9720
X/CW								
.081			-.2202					
.086		.0277						
.094	-.0284							
.150				-.1926	-.1940	-.2016	-.2239	
.157								-.1767
.163		-.0539						
.177			-.1537					
.229	-.0146							
.246		-.1336						
.250				-.1274	-.1642	-.1711	-.1758	
.274			-.1177					
.345								-.1595
.390		-.0971						
.400				-.1122	-.1183		-.1457	
.422			-.0868					
[illegible]								-.1984
.500				-.1531	-.1632			
.566			-.2261					
.600							-.2068	
.637		-.1507						
.650						-.1962		
.670								-.2245
.700					-.2105			
.725				-.1955				
.750						-.2902	-.2667	
.760			-.2033					
.775				-.3286	-.2301			
.798		-.1681						
.808			-.3011					
.834	-.1617							
.839		-.2598						
.850				-.2259	-.1990	-.2127		
.857			-.2152					
.862								-.1363
.865	-.2530							
.879		-.1949						
.900	-.1301			-.1571			-.1315	
.905			-.1518					
.919		-.1360						
.950				-.0406	-.1209	-.0389		
.953			-.0443					
.955		-.0551						
.965	-.0656							
1.000			.0596		.0142		.0713	

REPRODUCIBILITY OF THE ORIGINAL PAGE IS POOR

DATE 10 FEB 76 TABULATED PRESSURE DATA - OA148 (AMES 11-073-1)

AMES 11-073(OA148) -140A/B/C/R ORB LEFT WING BOT (XEBL37)

ALPHA (2) = .104 BETA (3) = .181 MACH = .59652 Q = 594.31 P = 2385.8 RN/L = 4.8794

SECTION (1)LEFT WING BOT SURF DEPENDENT VARIABLE CP

2Y/BW	.2000	.3640	.4270	.5340	.6730	.7800	.8870	.9720
X/CW								
.010	.0111	.0690	.1099	-.4829	-.5850	-.5588	-.5169	
.020	.0000	.0608	.0237	-.4884	-.4705	-.5155	-.5809	-.1733
.040		.0731	-.1230					
.050	-.0023			-.3173	-.3380	-.3760	-.3874	
.069								-.1603
.080				-.2505				
.081			-.1501					
.086		.0716						
.094	-.0101							
.150				-.1648	-.1691	-.1776	-.2081	
.157								-.1788
.163		.0013						
.177			-.1227					
.229	.0051							
.246		-.1092						
.250				-.1224	-.1479	-.1623	-.1693	
.274			-.1026					
.345								-.1542
.390		-.0778						
.400				-.1082	-.1105		-.1430	
.402			-.0805					
.503								-.1872
.550				-.1514	-.1620			
.565			-.2296					
.600							-.2088	
.637		-.1434						
.650						-.1986		
.670								-.2144
.700					-.2133			
.725				-.1953				
.750						-.2844	-.2654	
.760			-.2061					
.775				-.3410	-.2301			
.791		-.1696						
.809			-.3003					
.834	-.1636							
.839		-.2636						
[illegible]				-.2300	-.1898	-.2194		
.857			-.2213					
.862								-.1199
.865	-.2532							
.879		-.2041						
.900	-.1456			-.1588			-.1307	
[illegible]			-.1591					
.919		-.1445						

```
                                        AMES 11-073(OA148) -140A/B/C/R ORB LEFT WING BOT                    (XEL.37.

ALPHA ( 2) =      .104     BETA  ( 3) =      .181

 SECTION ( 1)LEFT WING BOT SURF                  DEPENDENT VARIABLE CP

2Y/BW        .2990    .3640    .4270    .5340    .6730    .7800    .8870    .9720

  X/CW
    .950                                -.0470   -.1103   -.0395
    .953                       -.0544
    .955              -.0744
    .965     -.0893
   1.000                        .0627             .0309              .0732
ALPHA ( 2) =      .102     BETA  ( 4) =      4.244    MACH   =  .59652     Q      =  594.01     P      =  2385.8     RN/L   =  4.8794
 SECTION ( 1)LEFT WING BOT SURF                  DEPENDENT VARIABLE CP

2Y/BW        .2990    .3640    .4270    .5340    .6730    .7800    .8870    .9720

  X/CW
    .010     -.0299    .0476    .1626   -.3149   -.4106   -.3866   -.3298
    .020      .0000    .0608    .1007   -.3441   -.3349   -.3911   -.4177   -.1470
    .040               .0792   -.0375
    .050     -.0110                     -.2294   -.2602   -.2864   -.2891
    .063                                                                   -.1683
    .080                                -.1911
    .081                       -.0966
    .086               .0945
    .094     -.0110
    .150                                -.1312   -.1373   -.1489   -.1821
    .157                                                                   -.1653
    .163               .0412
    .177                       -.0947
    .229      .0065
    .246              -.0760
    .250                                -.1046   -.1251   -.1449   -.1558
    .274                       -.0795
    .345                                                                   -.1477
    .390              -.0653
    .400                                -.0979   -.1067            -.1402
    .402                       -.0760
    .503                                                                   -.1836
    .550                                -.1449   -.1595
    .565                       -.2284
    .600                                                           -.2053
    .637              -.1363
    .650                                                  -.1950
    .670                                                                   -.2054
    .700                                         -.2119
    .725                                -.1923
    .750                                                  -.2762   -.2616
    .760                       -.2056
```

```
                                    AMES 11-073(OA148) -140A/B/C/R ORB LEFT WING BOT             (XEBL37)

ALPHA ( 2) =      .102    BETA  ( 4) =     4.244

 SECTION ( 1)LEFT WING BOT SURF              DEPENDENT VARIABLE CP

2Y/BW        .2990   .3640   .4270   .5340   .6730   .7800   .8870   .9720

  X/CW
    .775                             -.3453  -.2268
    .798             -.1719
    .808                     -.2870
    .834    -.1745
    .839             -.2579
    .850                             -.2284  -.1764  -.2160
    .857                     -.2165
    .862                                                             -.1077
    .865    -.2489
    .879             -.2044
    .900    -.1593                   -.1577                  -.1291
    .905                     -.1591
    .919             -.1512
    .950                             -.0486  -.1046  -.0417
    .953                     -.0565
    .955             -.0820
    .965    -.1043
   1.000                      .0629           .0427           .0806

ALPHA ( 2) =      .019    BETA  ( 5) =     8.303   MACH   =  .59652     Q      =  594.31     R      =  2385.8     RN/L   =  4.8794

 SECTION ( 1)LEFT WING BOT SURF              DEPENDENT VARIABLE CP

2Y/BW        .2990   .3640   .4270   .5340   .6730   .7800   .8870   .9720

  X/CW
    .010    -.1143  -.0353   .1973  -.1487  -.2640  -.2747  -.2384
    .020     .0000   .0122   .1657  -.2025  -.2395  -.3014  -.3084  -.1605
    .040             .0405   .0426
    .060    -.0417                   -.1412  -.1913  -.2351  -.2551
    .069                                                             -.1816
    .080                             -.1316
    .081                     -.0372
    .086             .0890
    .094    -.0295
    .150                             -.1026  -.1202  -.1289  -.1681
    .157                                                             -.1691
    .163             .0672
    .177                     -.0595
    .[illegible]     .0063
    .246            -.0542
    .250                             -.0862  -.1160  -.1310  -.1546
    .274                     -.0647
    .345                                                             -.1633
    .390            -.0554
```

```
                                   AMES 11-073(OA148) -140A/B/C/R ORB LEFT WING BOT              (XESL77)

ALPHA ( 2) =      .019    BETA  ( 5) =    8.303

 SECTION ( 1)LEFT WING BOT SURF                DEPENDENT VARIABLE CP

2Y/BW         .2990   .3640   .4270   .5340   .6730   .7800   .8870   .9720

  X/CW
   .400                                -.0923  -.1016          -.1378
   .402                        -.0669
   .503                                                                -.1900
   .550                                -.1430  -.1522
   .565                        -.2678
   .600                                                        -.2024
   .637                -.1314
   .650                                                -.1893
   .670                                                                -.2035
   .700                                        -.2084
   .725                                -.1985
   .750                                                -.2611  -.2557
   .760                        -.2084
   .775                                -.3421  -.2169
   .799                -.1752
   .808                        -.2788
   .834       -.1762
   .839                -.2550
   .852                                -.2222  -.1644  -.2082
   .857                        -.2198
   .862                                                                -.0969
   .865       -.2469
   .879                -.2035
   .900       -.1703                   -.1551                  -.1191
   .905                        -.1631
   .919                -.1564
   .950                                -.0435  -.0682  -.0411
   .953                        -.0664
   .955                -.0921
   .965       -.1182
  1.000                         .0512           .0598           .0861
ALPHA ( 3) =     4.036    BETA  ( 1) =   -7.909   MACH   =  .59620     Q      =  591.73     P      =  2366.0     RN/L   =  [illegible]

 SECTION ( 1)LEFT WING BOT SURF                DEPENDENT VARIABLE CP

2Y/BW         .2990   .3640   .4270   .5340   .6730   .7800   .8870   .9720

  X/CW
   .010       .0814   .1481   .3381   .0235   .0423   .1775   .2330
   .020       .0000   .1491   .2391  -.0787   .0034   .0202   .0724   .0185
   .040               .1592   .0521
   .050       .0687                  -.0780  -.0467  -.0194   .0050
   .069                                                               -.0092
   .080                              -.0677
```

AMES 11-073(OA148) -140A/B/C/R ORB LEFT WING BOT (XEBL37)

ALPHA (3) = 4.036 BETA (1) = -7.909

SECTION (1)LEFT WING BOT SURF DEPENDENT VARIABLE CP

2Y/BW	.2990	.3640	.4270	.5340	.6730	.7800	.8870	.9720
X/CW								
.081			-.0055					
.086		.1649						
.094	.0534							
.150				-.0205	-.0085	.0046	-.0144	
.157								-.1158
.163		.0950						
.177			-.0105					
.229	.0584							
.246		-.0189						
.250				-.0028	-.0193	-.0249	-.0322	
.274			-.0013					
.345								-.0827
.390		-.0015						
.400				-.0215	-.0254		-.0563	
.402			.0032					
.503								-.1457
.550				-.0907	-.0978			
.555			-.2901					
.600							-.1634	
.637		-.0919						
.650						-.1540		
.670								-.1971
.700					-.1743			
.725				-.1545				
.750						-.2544	-.2301	
.760			-.1676					
.775				-.2904	-.1964			
.798		-.1361						
.808			-.2742					
.834	-.1376							
.839		-.2345						
.850				-.2136	-.1773	-.21[illegible]		
.857			-.1930					
.862								-.1708
[illegible]	-.2270							
.870		-.1651						
.900	-.0938			-.1469			-.1494	
.925			-.1375					
[illegible]		-.1122						
[illegible]				-.0331	-.1030	-.0572		
[illegible]			-.0278					
[illegible]		-.0392						
[illegible]	-.0158							
[illegible]			.0958		.0261		.0289	

DATE 10 FEB 78 TABULATED PRESSURE DATA - OA148 (AMES 11-073-1)

AMES 11-073(OA148) -140A/B/C/R ORB LEFT WING BOT (XE8L37)

ALPHA (3) = 4.041 BETA (2) = -3.867 MACH = .59620 Q = 593.73 P = 2386.0 RN/L = +.88+0

SECTION (1)LEFT WING BOT SURF DEPENDENT VARIABLE CP

2Y/BW	.2990	.3640	.4270	.5340	.6730	.7800	.8870	.9720
X/CW								
.010	.0105	.0641	.3409	.1156	.1055	.2295	.2580	
.020	.0000	.1149	.2857	.0007	.0595	.0875	.1109	-.0730
.040		.1418	.1220					
.050	.0473			-.0118	.0027	.0210	.0239	
.069								-.0752
.080				-.0242				
.081			.0343					
[illegible]		.1721						
.094	.0457							
[illegible]				-.0011	.0147	.0168	-.0185	
.157								-.1368
.163		.1265						
.177			.0119					
[illegible]	.0645							
[illegible]		.0045						
.250				.0034	-.0112	-.0255	-.0444	
.274			.0012					
.345								-.1112
.390		.0092						
.400				-.0270	-.0242		-.0674	
.402			-.0002					
.503								-.1724
.550				-.0881	-.1038			
.565			-.2799					
.600							-.1778	
.637		-.0905						
.650						-.1608		
.670								-.2087
.700					-.1811			
.725				-.1585				
.750						-.2568	-.2431	
.760			-.1773					
.775				-.3058	-.2008			
.798		-.1399						
.808			-.2747					
.634	-.1457							
.839		-.2379						
.850				-.2191	-.1920	-.2173		
.857			-.2048					
.862								-.1800
[illegible]	-.2359							
[illegible]		-.1775						
.900	-.1210			-.1510			-.1569	
.905			-.1490					
.919		-.1230						

```
                                     AMES 11-073(OA148) -140A/B/C/R ORB LEFT WING BOT                (XEBL37)

ALPHA ( 3) =    4.041    BETA  ( 2) =    -3.867

 SECTION ( 1)LEFT WING BOT SURF              DEPENDENT VARIABLE CP

2Y/BW        .2990   .3640   .4270   .5340   .6730   .7800   .8870   .9720

  X/CW
    .950                               -.0380  -.1076  -.0570
    .953                       -.0461
    .955               -.0554
    .955      -.0621
   1.000                        .0820           .0425            .0371
ALPHA ( 3) =    4.040    BETA  ( 3) =     .186   MACH    =  .59620     Q      =  593.73     P      =  2386.0     RN/L    =  4.8840

 SECTION ( 1)LEFT WING BOT SURF              DEPENDENT VARIABLE CP

2Y/BW        .2990   .3640   .4270   .5340   .6730   .7800   .8870   .9720

  X/CW
    .010     -.0850  -.0615   .3021   .1863   .1477   .2347   .2426
    .020      .0000   .0424   .2902   .0561   .0979   .1106   .1164  -.1643
    .040              .0821   .1662
    .050      .0075                   .0255   .024u   .0342   .0261
    .069                                                             -.1529
    .080                              .0121
    .091                      .0657
    .085              .1590
    .094      .0220
    .150                              .0041   .0105   .0193  -.0247
    .157                                                             -.1645
    .163              .1416
    .177                      .0199
    .229      .0574
    .246              .0230
    .250                              .0061  -.0114  -.0223  -.0538
    .274                      .0135
    .345                                                             -.1500
    .390              .0155
    .400                             -.0226  -.0283          -.0775
    .402                      .0025
    .503                                                             -.1942
    .550                             -.0904  -.1023
    .565                     -.2555
    .600                                                     -.1839
    .637             -.0831
    .650                                             -.1623
    .670                                                             -.2292
    .700                                     -.1828
    .725                             -.1640
    .750                                             -.2664  -.2503
    .760                     -.1821
```

```
                                    AMES 11-073(OA148) -140A/B/C/R ORB LEFT WING BOT              (XE

ALPHA ( 3) =    4.040    BETA  ( 3) =     .186

 SECTION ( 1)LEFT WING BOT SURF              DEPENDENT VARIABLE CP

2Y/BW        .2990   .3640   .4270   .5340   .6730   .7800   .8870   .9720

  X/CW
    .775                                -.3170  -.2073
    .798            -.1426
    .808                    -.2749
    .834    -.1487
    .839            -.2415
    .850                                -.2163  -.1774  -.2288
    .857                    -.2098
    .862                                                                -.1801
    .865    -.2343
    .879            -.1845
    .900    -.1345                      -.1503                  -.1671
    .905                    -.1535
    .919            -.1416
    .950                                -.0439  -.1009  -.0649
    .953                    -.0547
    .955            -.0555
    .955    -.0844
   1.000                     .0757               .0536           .0259

ALPHA ( 3) =    4.044    BETA  ( 4) =    4.217   MACH   =  .59620    Q      =  593.73     P      =  2386.0     RN/L   =  4.9840

 SECTION ( 1)LEFT WING BOT SURF              DEPENDENT VARIABLE CP

2Y/BW        .2990   .3640   .4270   .5340   .6730   .7800   .8870   .9720

  X/CW
    .010    -.2163  -.2464   .2225   .2410   . 929   .2601   .2585
    .020     .0000  -.0822   .2606   .1336   1384    .1512   .1474  -.3142
    .040            -.0175   .1796
    .050    -.0594                   .0720   .0537   .0584   .0537
    .060                                                            -.2653
    .080                             .0419
    .081                     .0913
    .096             .1176
    .104    -.0185
    .150                             .0191   .0337   .0216  -.0258
    .157                                                            -.1978
    .163             .1503
    .177                     .0392
    .229     .0354
    .246             .0258
    .250                             .0040  -.0087  -.0172  -.0594
    .274                     .0201
    .345                                                            -.2042
    .390             .0220
```

DATE 10 FEB 76 TABULATED PRESSURE DATA - OA148 (AMES 11-073-1)

AMES 11-073(OA148) -140A/B/C/R ORB LEFT WING BOT (XEBL37)

ALPHA (3) = 4.044 BETA (4) = 4.237

SECTION (1)LEFT WING BOT SURF DEPENDENT VARIABLE CP

2Y/BW	.2990	.3640	.4270	.5340	.6730	.7800	.8870	.9720
X/CW								
.400				-.0222	-.0277		-.0864	
.402			.0001					
.503								-.2365
.550				-.0908	-.1039			
.565			-.2589					
.600							-.1912	
.637		-.0966						
.650						-.1659		
.670								-.2542
.700					-.1846			
.725				-.1731				
.750						-.2559	-.2508	
.760			-.1908					
.775				-.3159	-.2020			
.779		-.1499						
.808			-.2613					
.844	-.1595							
.849		-.2388						
.850				-.2154	-.1630	-.2247		
.857			-.2054					
.862								-.1929
.865	-.2361							
.873		-.1897						
.900	-.1465			-.1551			-.1592	
.905			-.1627					
.919		-.1460						
.950				-.0491	-.0348	-.0620		
.953			-.0625					
.955		-.0809						
.965	-.0987							
1.000			.0532		.0621		.0455	

ALPHA (3) = 4.049 BETA (5) = 8.284 MACH = .59620 Q = 593.73 P = 2386.0 RN/L = 4.8840

SECTION (1)LEFT WING BOT SURF DEPENDENT VARIABLE CP

2Y/BW	.2990	.3640	.4270	.5340	.6730	.7800	.8870	.9720
X/CW								
[illegible]	[illegible]	-.3939	.0910	.2573	.2116	.2490	.2241	
[illegible]	[illegible]	-.2076	.1818	.1693	.1597	.1633	.1337	-.4649
[illegible]		-.1402	.1789					
[illegible]	-.1344			.1016	.0959	.0766	.0579	
[illegible]								-.3739
				.0658				

AMES 11-073(OA148) -140A/B/C/R ORB LEFT WING BOT [illegible]

ALPHA (3) = 4.049 BETA (5) = 8.284

SECTION (1) LEFT WING BOT SURF DEPENDENT VARIABLE CP

2Y/BW	.2330	.3540	.4270	.5340	.6730	.7800	.8870	.9720
X/CW								
.031			.1024					
.085		.0566						
.100	-.0742							
.150				.0290	.0334	.0291	-.0356	
.157								-.2600
.163		.1387						
.177			.0553					
.239	.0102							
.245		.0292						
.250				.0097	-.0012	-.0183	-.0650	
.274			.0239					
.345								-.2567
.390		.0192						
.400				-.0236	-.0327		-.0979	
.402			-.0061					
.503								-.2723
.550				-.0907	-.1034			
.555			-.3110					
.600							-.1691	
.637		-.0872						
.650						-.1667		
.670								-.2746
.700					-.1811			
.725				-.1712				
.750						-.2527	-.2540	
.760			-.1944					
.775				-.3056	-.1940			
.788		-.1568						
.809			-.2492					
.844	-.1573							
.849		-.2492						
.850				-.2096	-.1497	-.2192		
.857			-.2097					
.862								-.1964
.865	-.2329							
.873		-.1893						
.900	-.1647			-.1512			-.1576	
.915			-.1607					
.919		-.1550						
.950				-.0513	-.0586	-.0670		
.953			-.0715					
.955		-.0832						
.975	-.1120							
1.000			.0530		.0641		.0497	

AMES 11-073(OA148) -140A/B/C/R ORB LEFT WING BOT (XEBL37)

ALPHA (4) = 7.972 BETA (1) = -7.894 MACH = .59666 Q = 594.55 P = 2385.8 RN/L = 4.8889

SECTION (1)LEFT WING BOT SURF DEPENDENT VARIABLE CP

2Y/BW	.2990	.3640	.4270	.5340	.6730	.7800	.8870	.9720
X/CW								
.010	-.0195	-.0727	.4048	.4864	.4965	.5698	.5442	
.020	.0000	.1014	.4371	.3541	.4230	.4469	.4601	-.2379
.040		.1576	.3273					
.050	.0992			.2467	.2865	.3112	.3246	
.069								-.1275
.080				.1928				
.081			.2095					
.086		.2613						
.094	.1138							
.140				.1558	.1755	.1940	.1535	
.157								-.1436
.163		.2542						
.177			.1479					
.229	.1410							
.246		.1243						
.250				.1310	.1246	.1184	.0878	
.274			.1194					
.345								-.0887
.390		.1026						
.400				.0746	.0707		.0239	
.402			.0935					
.503								-.1595
.550				-.0175	-.0270			
.565			-.3247					
.600							-.1275	
.637		-.0330						
.650						-.1108		
.670								-.2139
.700					-.1357			
.725				-.1132				
.750						-.2117	-.2000	
.760			-.1401					
.775				-.2579	-.1612			
.795		-.1045						
.812			-.2292					
[illegible]	-.1124							
[illegible]		-.1991						
[illegible]				-.1865	-.1574	-.2058		
[illegible]			-.1688					
[illegible]								-.2303
[illegible]	-.1983							
[illegible]		-.1425						
[illegible]	-.2279			-.1384			-.1787	
[illegible]			-.1289					
[illegible]		-.0980						

```
DATE 10 FEB 76             TABULATED PRESSURE DATA - OA148 ( AMES 11-073-1 )                                          PAGE 2094

                                         AMES 11-073(OA148) -140A/B/C/R ORB LEFT WING BOT              (XEBL37)

ALPHA ( 1) =     7.972     BETA ( 1) =   -7.894

 SECTION ( 1)LEFT WING BOT SURF              DEPENDENT VARIABLE CP

2Y/BW        .2990    .3640    .4270    .5340    .6730    .7800    .8870    .9720

  X/CW
    .950                                 -.0323   -.0978   -.0697
    .953                        -.0327
    .955               -.0244
    .965      -.0087
   1.000                         .0982             .0521             -.0418

ALPHA ( 2) =     7.984     BETA ( 2) =   -3.864     MACH   =  .59866     Q      =  594.55     P      =  2385.8     RN/L   =  4.8869

 SECTION ( 1)LEFT WING BOT SURF              DEPENDENT VARIABLE CP

2Y/BW        .2990    .3640    .4270    .5340    .6730    .7800    8870     .9720

  X/CW
    .010     -.1687   -.2955    .2815    .4810    .4768    .5097    .4714
    .020      .0000   -.0328    .2773    .3664    .4216    .4238    .4221   -.4574
    .040                .0418    .3263
    .050      .0305                      .2630    .2884    .3027    .3067
    .069                                                                  -.2795
    .080                                 .2063
    .081                         .2219
    .096                .2187
    .114      .0672
    .150                                 .1556    .1825    .1860    .1357
    .157                                                                  -.1935
    .163                .2572
    .177                         .1545
    .229      .1181
    .246                .1357
    .250                                 .1262    .1173    .1097    .0668
    .274                         .1213
    .345                                                                  -.1518
    .[illegible]                .1121
    .400                                 .0749    .0639             .0031
    .402                         .0914
    .503                                                                  -.2190
    .550                                -.0212   -.0349
    .565                        -.2689
    .600                                                            -.1450
    .[illegible]               -.0248
    .650                                                   -.1190
    .670                                                                  -.2420
    .700                                          -.1405
    .725                                -.1217
    .750                                                   -.2158   -.2137
    .760                        -.1477
```

```
                                   AMES 11-073(OA148) -140A/B/C/R ORB LEFT WING .                     (XEBL37)

ALPHA ( 4) =     7.984    BETA  ( 2) =    -3.854

 SECTION ( 1)LEFT WING BOT SURF                 DEPENDENT VARIABLE CP

2Y/BW          .2990   .3640   .4270   .5340   .6730   .7800   .8870   .9720

  X/CW
     .775                              -.2706  -.1625
     .798              -.1092
     .808                      -.2284
     .834     -.1206
     .839              -.2048
     .850                              -.1929  -.1477  -.2119
     .857                      -.1811
     .862                                                              -.2534
     .865     -.1990
     .879              -.1596
     .900     -.0855                   -.1411                  -.1826
     .905                      -.1368
     .919              -.1173
     .950                              -.0428  -.1048  -.0810
     .953                      -.0438
     .955              -.0472
     .965     -.0476
    1.000                       .0829           .0601          -.0344
ALPHA ( 4) =     7.990    BETA  ( 3) =       .171   MACH   =  .59566     Q      =  594.55     P      =  2385.8     RN/L   =  4.8889

 SECTION ( 1)LEFT WING BOT SURF                 DEPENDENT VARIABLE CP

2Y/BW          .2990   .3640   .4270   .5340   .6730   .7800   .8870   .9720

  X/CW
     .010     -.3724  -.5563   .1176   .4435   .4319   .4320   .3821
     .020      .0000  -.2077   .2852   .3735   .3961   .3955   .3667  -.6582
     .040              -.1067   .3108
     .050     -.0547                   .2757   .2858   .2866   .2685
     .063                                                              -.4392
     .080                              .2118
  [illegible]                   .2307
  [illegible]           .1511
  [illegible]  .0075
  [illegible]                          .1580   .1765   .1764   .1072
  [illegible]                                                          -.2380
  [illegible]           .2457
  [illegible]                   .1563
  [illegible]  .0329
  [illegible]           .1353
                                       .1209   .1149   .1013   .0445
  [illegible]                   .1242
  [illegible]                                                          -.2274
  [illegible]           .1136
```

```
DATE 10 FEB 76              TABULATED PRESSURE DATA - OA148 ( AMES 11-073-1 )                                PAGE 2096

                                  AMES 11-073(OA148) -140A/B/C/R ORB LEFT WING BOT                  (XE8L37)

ALPHA ( 4) =      7.990    BETA  ( 3) =      .171

 SECTION ( 1)LEFT WING BOT SURF               DEPENDENT VARIABLE CP

2Y/BW        .2990    .3640    .4270    .5340    .6730    .7800    .8870    .9720

  X/CW
   .400                                 .0649    .0559             -.0180
   .402                         .0866
   .503                                                                     -.2710
   .550                                -.0283   -.0411
   .565                        -.2733
   .600                                                            -.1606
   .637               -.0260
   .650                                                   -.1262
   .670                                                                     -.2818
   .700                                         -.1410
   .725                                -.1237
   .750                                                   -.2242   -.2273
   .760                        -.1556
   .775                                -.2658   -.1646
   .788               -.1162
   .809                        -.2216
   .834      -.1272
   .839               -.2030
   .850                                -.1932   -.1422   -.2185
   .857                        -.1803
   .862                                                                     -.2706
   .865      -.2009
   .879               -.1602
   .900      -.1083                    -.1384                      -.1845
   .905                        -.1414
   .919               -.1244
   .950                                -.0464   -.0982   -.0797
   .953                        -.0520
   .955               -.0591
   .965      -.0664
  1.000                         .0765             .0655            -.0233
ALPHA ( 4) =     7.990    BETA  ( 4) =     4.234   MACH   =  .59666    Q      =  594.55     F       =  2385.8    RN/L   =  4 [illegible]

 SECTION ( 1)LEFT WING BOT SURF              DEPENDENT VARIABLE CP

2Y/BW        .2990    .3640    .4270    .5340    .6730    .7800    .8870    .9720

  X/CW
   .010      -.5562   -.7105   -.0773    .3817    .3713    .3265    .2645
   .020       .0000   -.3565    .1479    .3384    .3523     3504    .3016   -.9340
   .040               -.2385    .2607
   .050      -.1490                      .2603    .2817    .2730    .2437
   .069                                                                     -.6201
   .080                                  .2020
```

DATE 10 FEB 76　　TABULATED PRESSURE DATA - OA148 (AMES 11-073-1)　　

AMES 11-073(OA148) -140A/B/C/R ORB LEFT WING BOT　　(XE8L37)

ALPHA (4) = 7.990　BETA (4) = 4.234

SECTION (1)LEFT WING BOT SURF　　DEPENDENT VARIABLE CP

2Y/BW	.2990	.3640	.4270	.5340	.6730	.7800	.8870	.9720
X/CW								
.081			.2120					
.086		.0669						
.094	-.0615							
.150				.1462	.1655	.1674	.0805	
.157								-.3151
.163		.2148						
.177			.1546					
.229	.0467							
.246		.1188						
.250				.1117	.1011	.0940	.0294	
.274			.1161					
.345								-.3127
.390		.1046						
.400				.0569	.0454		-.0394	
.402			.0762					
.503								-.3348
.550				-.0342	-.0449			
.565			-.2849					
.600							-.1672	
.637		-.0313						
.650						-.1326		
.670								-.3147
.700					-.1517			
.725				-.1371				
.750						-.2301	-.2366	
.760			-.1590					
.775				-.2586	-.1578			
.798		-.1221						
.808			-.2129					
.834	-.1357							
.849		-.2092						
.850				-.1869	-.1338	-.2178		
.857			-.1820					
.862								-.2792
.865	-.2021							
.879		-.1731						
.900	-.1241			-.1466			-.1897	
.925			-.1485					
.950		-.1303						
.960				-.0486	-.0774	-.0873		
.973			-.0597					
.985		-.0531						
.995	-.0772							
1.000			.0634		.0320		-.0139	

```
DATE 10 FEB 76                TABULATED PRESSURE DATA - OA148 ( AMES 11-073-1 )                                       PAGE 2038

                                     AMES 11-073(OA148) -140A/B/C/R ORB LEFT WING BOT                 (XEBL3

ALPHA ( 4) =     7.989    BETA  ( 5) =     8.288   MACH   =  .59666      Q      =  594.55      P      =  2385.8     RN/L   =  - 6069

 SECTION ( 1)LEFT WING BOT SURF                DEPENDENT VARIABLE CP

2Y/BW       .2990    .3640    .4270    .5340    .6730    .7800    .8870    .9720

  X/CW
   .010    -.7702   -.6616   -.2974    .2813    .2777    .1860    .1275
   .020     .0000   -.4493   -.0121    .2946    .2928    .2791    .2138 -1.1834
   .040             -.3453    .1809
   .050    -.2629                      .2412    .2508    .2378    .1841
   .063                                                                 -.7994
   .080                                .1905
   .091                       .1842
   .085             -.0129
   .094    -.1456
   .150                                .1323    .1551    .1516    .0548
   .157                                                                 -.3865
   .163              .1721
   .177                       .1421
   .229    -.0027
   .246              .1014
   .250                                .0970    .0955    .0720    .0057
   .274                       .1029
   .345                                                                 -.3919
   .390              .0915
   .400                                .0374    .0400            -.0596
   .402                       .0637
   .503                                                                 -.3814
   .550                               -.0368   -.0560
   .565                      -.3107
   .600                                                          -.1833
   .637             -.0356
   .650                                                 -.1495
   .676                                                                 -.3416
   .700                                        -.1681
   .725                               -.1452
   .750                                                 -.2407   -.2557
   .760                      -.1748
   .775                               -.2623   -.1838
   .798             -.1302
   .808                      -.2164
   .834    -.1496
   .839             -.2173
   .850                               -.2017   -.1563   -.2339
   .857                      -.1914
   .862                                                                 -.2726
   .865    -.2083
   .879             -.1772
   .900    -.1454                     -.1657                     -.1852
   .905                      -.1534
   .919             -.1440
```

AMES 11-073(OA148) -140A/B/C/R ORB LEFT WING BOT (XE8L37)

ALPHA (4) = 7.988 BETA (5) = 8.288

SECTION (1)LEFT WING BOT SURF DEPENDENT VARIABLE CP

2Y/BW	.2990	.3640	.4270	.5340	6730	.7800	.8870	.9720
X/CW								
.950				-.0726	-.0800	-.1004		
.953			-.0727					
.955		-.0926						
.965	-.1053							
1.000			.0582		.0492		.0121	

ALPHA (5) = 11.959 BETA (1) = -7.860 MACH = .59676 Q = 594.79 P = 2385.8 RN/L = 4.8888

SECTION (1)LEFT WING BOT SURF DEPENDENT VARIABLE CP

2Y/BW	.2990	.3540	.4270	.5340	.6730	.7800	.8870	.9720
X/CW								
.010	-.3204	-.6652	.1201	.6006	.6015	.5156	.4538	
.020	.0000	-.1698	.3774	.5736	.59	.5905	.5334	-.7813
.040		-.0401	.4625					
.050	.0500			.4634	.4992	.5053	.4776	
.059								-.4196
.063				.3902				
.081			.3808					
.085		.2712						
.094	.1244							
.150				.3105	.3449	.3497	.2849	
.157								-.2067
.163		.3744						
.177			.2909					
.229	.1994							
.246		.2580						
.250				.2518	.2553	.2474	.1945	
.274			.2373					
.345								-.1253
.390		.2124						
[illegible]				.1687	.1708		.1027	
[illegible]			.1679					
[illegible]								-.1865
[illegible]				.0596	.0478			
[illegible]			-.3411					
[illegible]							-.0815	
.637		.0414						
[illegible]						-.0568		
[illegible]								-.2115
[illegible]					-.0878			
[illegible]				-.0569				
[illegible]						-.1640	-.1606	
[illegible]			-.1096					

```
DATE 10 FEB 78               TABULATED PRESSURE DATA - OA148 ( AMES 11-073-1 )                                  PAGE 2100

                                   AMES 11-073(OA148) -140A/B/C/R ORB LEFT WING BOT                 (XEBL37

ALPHA ( 5) =   11.959    BETA  ( 1) =   -7.850

 SECTION ( 1)LEFT WING BOT SURF                 DEPENDENT VARIABLE CP

2Y/BW        .2990    .3640    .4270    .5340    .6730    .7800    .8970    .9720

  X/CW
    .775                                -.1843   -.0941
    .798              -.0695
    .808                       -.1602
    .834     -.0939
    .839              -.1602
    .850                                -.1552   -.1089   -.1883
    .857                       -.1377
    .862                                                                    -.2983
    .865     -.1549
    .879              -.1222
    .900     -.0447                     -.1269                     -.2030
    .905                       -.1172
    .919              -.0834
    .950                                -.0479   -.0661   -.0924
    .953                       -.0334
    .955              -.0289
    .965     -.0125
   1.000                        .0754             .0061            -.1327
ALPHA ( 5) =   11.981    BE A  ( 2) =   -3.846   MACH   =   .59676     Q     =  594.79     P     =  2385.8    RN/L   =  4.[illegible]
 SECTION ( 1)LEFT WING BOT SURF                 DEPENDENT VARIABLE CP

2Y/BW        .2990    .3640    .4270    .5340    .6730    .7800    .8870    .9720

  X/CW
    .010     -.5371   -.8908   -.1091    .5029    .4988    .3750    .3034
    .020      .0000   -.3427    .2349    .5201    .5376    .5119    .4432  -1.0296
    .040              -.1990    .4048
    .050     -.0514                      .4438    .4784    .4651    .4275
    .069                                                                    -.6006
    .080                                 .3743
    .081                        .3582
    .086               .1860
    .094      .0537
    .150                                 .2944    .3226    .3271    .2443
    .157                                                                    -.2788
    .163               .3432
    .177                        .2827
    .223      .1590
    .246               .2500
    .250                                 .2421    .2355    .2285    .1602
    .274                        .2378
    .345                                                                    -.2112
    .390               .2108
```

```
                              AMES 11-073(OA148) -140A/B/C/R ORB LEFT WING BOT              (XE8L37)

ALPHA ( 5) =    11.981     BETA  ( 2) =    -3.846

 SECTION ( 1)LEFT WING BOT SURF                 DEPENDENT VARIABLE CP

2Y/BW         .2990    .3640    .4270    .5340    .6730    .7800    .8870    .9720

  X/CW
   .400                                  .1636    .1549             .0675
   .402                         .1834
   .503                                                                     -.2621
   .550                                  .0494    .0369
   .555                        -.3010
   .600                                                            -.1090
   .637                .0448
   .650                                                   -.0741
   .670                                                                     -.2634
   .700                                          -.1044
   .725                                 -.0896
   .750                                                   -.1845   -.1784
   .760                        -.1157
   .775                                 -.2005   -.1211
   .799               -.0734
   .808                        -.1637
   .834      -.1008
   .839               -.1639
   .850                                 -.1642   -.1256   -.2022
   .857                        -.1509
   .862                                                                     -.3203
   .865      -.1582
   .873               -.1302
   .900      -.0531                     -.1298                     -.2123
   .905                        -.1214
   .919               -.1012
   .940                                 -.0509   -.0879   -.1034
   .953                        -.0393
    955               -.0454
   .965      -.0339
  1.000                         .0812             .0009            -.1137
ALPHA ( 5) =    11.931     BETA  ( 3) =     .172   MACH   =  .59676     Q      =  594.79     P      =  2385.8     RN/L   =  4.8888

 SECTION ( 1)LEFT WING BOT SURF                 DEPENDENT VARIABLE CP

2Y/BW         .2990    .3640    .4270    .5340    .6730    .7800    .8870    .9720

  X/CW
             -.7835  -1.1353   -.3548    .3819    .3848    .2169    .1500
        [illegible]   -.5377    .0493    .4529    .4552    .4193    .3311  -1.2419
                      -.3772    .3289
             -.1633                      .4123    .4352    .4119    .3601
                                                                            -.7735
                                         .3497
```

```
DATE 10 FEB 75              TABULATED PRESSURE DATA - CA148 ( AMES 11-073-1 )

                                  AMES 11-073(OA148) -140A/B/C/R ORB LEFT WING BOT          (XEBL37)

ALPHA ( 5) =   11.991    BETA  ( 3) =     .172

SECTION ( 1)LEFT WING BOT SURF              DEPENDENT VARIABLE CP

2Y/BW       .2390    .3640    .4270    .5340    .6730    .7800    .8870    .9720

  X/CW
  .081                       .3254
  .086              .0228
  .094     -.1342
  .150                                .2734    .2933    .3039    .1981
  .157                                                                   -.3353
  .163              .3035
  .177                       .2655
  .219      .1095
  .246              .2213
  .250                                .2233    .2164    .2020    .1248
  .274                       .2149
  .345                                                                   -.2970
  .350              .1981
  .400                                .1396    .1382             .0377
  .402                       .1659
  .503                                                                   -.3298
  .550                                .0346    .0190
  .565                      -.2740
  .600                                                          -.1352
  .637              .0343
  .650                                                 -.1034
  .670                                                                   -.3047
  .700                                        -.1381
  .725                               -.1074
  .750                                                 -.2033   -.2081
  .760                      -.1384
  .775                               -.2189   -.1607
  .793             -.0875
  .828                      -.1743
  .834     -.1132
  .839             -.1734
  .850                               -.1835   -.1676   -.2277
  .857                      -.1617
  .862                                                                   -.3263
  .865     -.1726
  .873             -.1430
  .900     -.0957                    -.1553                     -.2266
  .905                      -.1383
  .919             -.1185
  .950                               -.0663   -.0999   -.1308
  .953                      -.0547
  [illegible]      [illegible]
  [illegible] -.0535
 1.000                      [illegible]        .0199            -.0831
```

AMES 11-073(OA148) -140A/B/C/R ORB LEFT WING BOT (XEBL37)

ALPHA (5) = 11.985 BETA (4) = 4.243 MACH = .59676 Q = 594.79 P = 2385.8 RN/L = 4.8888

SECTION (1)LEFT WING BOT SURF DEPENDENT VARIABLE CP

2Y/BW	.2990	.3540	.4270	.5340	.6730	.7800	.8870	.9720
X/CW								
.010	-1.0004	-.9700	-.5673	.2333	.2415	.0225	-.0359	
.020	.0000	-.6137	-.1292	.3591	.3542	.3083	.2157	-1.3843
.040		-.4770	.2313					
.050	-.2905			.3516	.3816	.3456	.2857	
.069								-.8779
.080				.3103				
.081			.2755					
.086		-.0120						
.094	-.1334							
.150				.2472	.2696	.2654	.1672	
.157								-.3586
.163		.2440						
.177			.2427					
.229	.0503							
.246		.1872						
.250				.1969	.1937	.1804	.0939	
.274			355					
.345								-.3369
.350		.1810						
.400				.1248	.1124		.0111	
.402			.1449					
.503								-.3586
.550				.0242	.0026			
.555			-.2960					
.600							-.1486	
.637		.0235						
.650						-.1159		
.670								-.3238
.700					-.1513			
.725				-.1174				
.750						-.2235	-.2212	
.760			-.1511					
.775				-.2343	-.1759			
.788		-.1018						
[illegible]			-.1816					
[illegible]	-.1194							
[illegible]		-.1879						
[illegible]				-.1971	-.1901	-.2344		
[illegible]			-.1737					
[illegible]								-.3112
[illegible]	-.1302							
[illegible]		-.1548						
[illegible]	-.1070			-.1703			-.2335	
[illegible]			-.1556					
[illegible]		-.1305						

```
                                AMES 11-073(OA148) -140A/B/C/R ORB LEFT WING BOT          (XEEL3)
ALPHA ( 5) =   11.995    BETA  ( 4) =    4.243
 SECTION ( 1)LEFT WING BOT SURF                 DEPENDENT VARIABLE CP
2Y/BW       .2330   .3540   .4270   .5340   .6730   .7800   .8870   .9720
  X/CW
   .950                            -.0951  -.0874  -.1494
   .953                    -.0747
   .955            -.0793
   .985    -.0692
  1.000                     .0507           .0245           -.0757
ALPHA ( 5) =   11.975    BETA  ( 5) =    8.313   MACH   =  .59676    Q     =  594.73     P     =  2395.8     =      =  4.2388
 SECTION ( 1)LEFT WING BOT SURF                 DEPENDENT VARIABLE CP
2Y/BW       .2330   .3540   .4270   .5340   .6730   .7800   .8870   .9720
  X/CW
   .010  -1.2636  -.7454  -.8024   .0663   .0676  -.1912  -.2216
   .020    .0000  -.6623  -.3234   .2425   .2439   .1842   .0813 -1.4443
   .040           -.5434   .1237
   .050   -.4283                   .2968   .3130   .2748   .2039
   .069                                                           -.9891
   .080                            .2646
   .081                    .2264
   .086           -.0352
   .094   -.2298
   .150                            .2095   .2365   .2318   .1300
   .157                                                           -.4233
   .163            .1916
   .177                    .2167
   .200    .0005
   .245            .1554
   .250                            .1725   .1723   .1488   0656
   .274                    .1747
   .345                                                           -.3969
   .300            .1585
   .400                            .1059   .1001           -.0167
   .402                    .1294
   .503                                                           -.4024
   .550                            .0157  -.0125
   .555                   -.3239
   .600                                                    -.1707
   .637            0155
   .650                                           -.1291
   .670                                                           -.3354
   .700                                   -.1625
   .725                           -.1235
   .750                                           -.2301  -.2310
   .760                   -.1600
```

```
                                AMES 11-073(OA148) -140A/B/C/R ORB LEFT WING BOT                (XE8L37)

ALPHA ( 5) =   11.975    BETA  ( 5) =    8.313

 SECTION ( 1)LEFT WING BOT SURF               DEPENDENT VARIABLE CP

2Y/BW        .2990   .3540   .4270   .5340   .6730   .7800   .8870   .9720

 X/CW
   .775                              -.2249  -.1592
   .793              -.1103
   .803                      -.1773
   .834      -.1215
   .839              -.1830
   .850                              -.1931  -.1764  -.2320
   .857                      -.1752
   .862                                                              -.2994
   .874      -.1843
   .879              -.1594
   .900      -.1153                  -.1832                  -.2322
   .905                      -.1529
   .913              -.1347
   .950                              -.1109  -.0908  -.1530
   .953                      -.0827
   .965              -.0830
   [illegible] -.0869
  1.000                       .0466           .0046          -.0810
```

```
DATE  [illegible]            TABULATED PRESSURE DATA - OA148 ( AMES 11-0[illegible]

                                 AMES 11-077 OA148 -140A/B/C/F OPB LEFT   [illegible]                [illegible]

            [illegible] DATA                                                                  PARAMETRIC DATA

SREF  =  [illegible]              XMRP  =  076.6900 IN. XO                          RUDDER =  [illegible]   SPDBRK =  [illegible]
LREF  =  [illegible]              YMRP  =  [illegible] IN. YO                       BDFLAP =  [illegible]   [illegible]
BREF  =  [illegible]              ZMRP  =  375.0000 IN. ZO                          [illegible] =  [illegible]
SCALE =  [illegible]

ALPHA ( ) =  [illegible].008   BETA ( ) =  7.857   MACH  =  1.3931    Q    =  501.60    P   =  [illegible].53    RN/L  =  [illegible]

SECTION ( )LEFT WING BOT SURF              DEPENDENT VARIABLE CP

2Y/BW       [illegible]  .1640   .4270   .5340   .6730   .7800   .8870   .9720

  [illegible]
   [illegible]  [illegible]  -.[illegible]  -.[illegible]  -.[illegible]  -.3540  -.2182  -.1900
   [illegible]  [illegible]  -.[illegible]  -.[illegible]  -.[illegible]6  -.3998  -.[illegible]  .4036  -.4548
   [illegible]               -.[illegible]  -.[illegible]
   [illegible]  -.1574
   [illegible]                               -.4441  -.4280  -.4415  -.4[illegible]
   [illegible]                                                                -.4867
   [illegible]                               -.4413
   [illegible]                       -.[illegible]
   .166                 -.1379
   [illegible]  -.1441
   [illegible]                               -.4007  -.3968  -.3635  -.3348
   .153                                                                       -.2999
   [illegible]          -.0324
   [illegible]                   -.1741
   [illegible]  -.1085
   [illegible]          -.1143
   [illegible]                               -.2102  -.3597  -.3524  -.3662
   [illegible]                   -.1641
   .340
   .391                 -.1396                                                -.4365
   [illegible]                               -.1712  -.3071           -.3153
   [illegible]                   -.1983
   [illegible]                                                                -.4125
   [illegible]                               -.1348  -.1557
   [illegible]                   -.2018
   [illegible]
   [illegible]          -.0947                                        -.3159
   [illegible]                                               -.3155
   .670                                                                       -.3057
   [illegible]                                       -.3127
   [illegible]                               -.1783
   [illegible]                                               -.0[illegible]6  -.0926
   [illegible]                   -.1908
   [illegible]                               .0354   -.[illegible]
   [illegible]          -.1527
   [illegible]                   [illegible]
   [illegible]  -.1862
   [illegible]          .0[illegible]
   [illegible]                               [illegible]  [illegible]
```

```
DATE 10 FEB 76          TABULA        DATA - OA148 ( AMES 11-073-1 )                                  PAGE 2107

                                        -073(OA148) -140A/B/C/R ORB LEFT WING BOT              (XEBL38)

ALPHA ( 1) =   -4.002    BETA  (           3

 SECTION ( 1)LEFT WING BOT SURF              PENDENT VARIABLE CP

2Y/BW        .2990    .3640    .427     [illegible]  .6730    .7800    .8870    .9720

  X/CW
   .857                        -.0105
   .862                                                                  -.3454
   .865     .0501
   .879              -.0369
   .900    -.0744                      -.1199                   -.2299
   .905                        -.0914
   .919              -.1141
   .950                                -.1654   -.1200   -.1293
   .953                        -.1546
   .955              -.1563
   .965    -.1470
  1.000                        -.2179            -.1174           -.3613

ALPHA ( 1) =   -3.940    BETA  ( 2) =     .193   MACH   =  1.3931     Q      =  600.20     P      =  441.83     RN/L   =  2.9112

 SECTION ( 1)LEFT WING BOT SURF              DEPENDENT VARIABLE CP

2Y/BW        .2990    .3640    .4270    .5340    .6730    .7800    .8870    .9720

  X/CW
   .010    -.0975   -.1121   -.0468   -.2716   -.3716   -.2584   -.2381
   .020     .0000   -.1166   -.1189   -.4078   -.4128   -.4343   -.4324   -.4997
   .040             -.1140   -.1726
   .050    -.1040                     -.4257   -.4374   -.4644   -.4611
   .069                                                                  -.5104
   .080                               -.3879
   .081                      -.1499
   .085             -.0508
   .094    -.0937
   .150                               -.3042   -.3946   -.4082   -.4209
   .157                                                                  -.3115
   .163              .0191
   .177                      -.1293
   .229    -.0693
   .245             -.0747
   .260                               -.1576   -.3541   -.3684   -.3915
   .274                      -.1255
   .345                                                                  -.4596
   .350             -.0974
   .400                               -.1394   -.1506            -.3444
   .423                      -.1137
[illegible]                                                              -.4449
[illegible]                           -.1046   -.1347
[illegible]                  -.3019
[illegible]                                                 -.3205
```

```
DATE 10 FEB 76          TABULATED PRESSURE DATA - OA148 ( AMES 11-073-1 )                                   [illegible]
                              AMES 11-073(OA148) -140A/B/C/R ORB LEFT WING BOT                (XEGL39)
ALPHA ( 1) =    -3.940   BETA  ( 2) =     .193
 SECTION ( 1)LEFT WING BOT SURF                     DEPENDENT VARIABLE CP
2Y/BW         .2990    .3640    .4270    .5340    .6730    .7800    .8970    .9720

  X/CW
    .637               -.0757
    .650                                                     -.1780
    .670                                                                      -.3285
    .700                                            -.1717
    .725                                   -.1574
    .750                                                      .0797   -.0187
    .760                          -.1693
    .775                                    .0558    .0236
    .798               -.1549
    .808                           .0799
    .834      -.1651
    .839                .0404
    .850                                   -.0098   -.0603   -.0022
    .857                           .0012
    .862                                                                      -.3507
    .865       .0369
    .879               -.0323
    .900      -.0823                       -.1032                     -.0862
    .905                          -.0830
    .919               -.1159
    .950                                   -.1595   -.1139   -.1140
    .953                          -.1515
    .955               -.1551
    .965      -.1561
   1.000                          -.2485            -.1513            -.2096
ALPHA ( 1) =    -3.950   BETA  ( 3) =    4.276  MACH  =  1.3931     Q     =  600.20    P     = [illegible]1.83   RN/L  = [illegible]
 SECTION ( 1)LEFT WING BOT SURF                     DEPENDENT VARIAB'E CP
2Y/BW         .2990    .3640    .4270    .5340    .6730    .7800    .8870    .9720

  X/CW
    .010      -.0767   -.0320    .0436   -.2629   -.3819   -.2911   -.2755
    .020       .0000   -.0471    .0089   -.3877   -.4205   -.4517   -.4548   -.5228
    .040               -.0388   -.0741
    .050      -.0754                       -.3507   -.4413   -.4778   -.4813
    .063                                                                      -.5188
    .080                                   -.3345
    .081                          -.0944
    .086               -.0031
    .094      -.0853
    .150                                   -.1793   -.3821   -.4155   -.4359
    .157                                                                      -.3223
    .163                .0511
```

TABULATED PRESSURE DATA - OA148 (AMES 11-073-1)

AMES 11-073(OA148) -140A/B/C/R ORB LEFT WING BOT (XE8L38)

ALPHA (1) = -3.950 BETA (3) = 4.276

SECTION (1)LEFT WING BOT SURF DEPENDENT VARIABLE CP

2Y/BW	.2990	.3640	.4270	.5340	.6730	.7800	.8870	.9720
X/CW								
.177			-.0963					
.229	-.0524							
.246		-.0426						
.250				-.1314	-.1822	-.3610	-.4033	
.274			-.0854					
.345								-.4612
.390		-.0611						
.400				-.1047	-.1289		-.3500	
.402			-.0814					
.503								-.4176
.550				-.0874	-.1019			
.565			-.2883					
.600							-.1542	
.637		-.0587						
.650						-.1451		
.670								-.2101
.700					-.1516			
.725				-.1468				
.750						.1055	.1323	
.760			-.1587					
.775				.0766	.0467			
.798		-.1421						
.809			.0864					
.834	-.1695							
.839		.0261						
.850				.0132	-.0495	.0150		
.857			-.0039					
.862								-.1379
.865	.0621							
.879		-.0357						
.900	-.0746			-.0827			-.0313	
.905			-.0866					
.919		-.1158						
.950				-.1522	-.0939	-.0937		
.975			-.1505					
.985		-.1507						
.995	-.1569							
1.000			-.2377		-.1767		-.1807	

```
DATE 10 FEB 76                 TABULATED PRESSURE DATA - OA148 ( AMES 11-073-1 )                                   PAGE 211

                                         AMES 11-073(OA148) -140A/B/C/R ORB LEFT WING BOT                (XEEL35)

ALPHA ( 2) =    .000     BETA  ( 1) =   -3.869   MACH   =  1.3931     Q      =  599.58     P      =  441.38     RN/L   =

 SECTION  ( 1)LEFT WING BOT SURF             DEPENDENT VARIABLE CP

2Y/BW        .2990   .3640   .4270   .5340   .6730   .7800   .8870   .9720

  X/CW
    .010    -.0005   .0158   .2139  -.0805  -.1779  -.1031  -.0191
    .020     .0000  -.0178   .1551  -.2131  -.2251  -.2363  -.2531  -.2157
    .040            -.0159   .0154
    .050    -.0297                  -.2138  -.2325  -.2648  -.2697
    .069                                                            -.2406
    .080                            -.1739
    .081                    -.0322
    .085             .0274
    .094    -.0454
    .150                            -.1202  -.1807  -.1979  -.2186
    .157                                                            -.1903
    .163             .1020
    .177                    -.0383
    .229    -.0395
    .246            -.0143
    .250                            -.0585  -.1316  -.1542  -.1856
    .274                    -.0435
    .345                                                            -.1458
    .390            -.0328
    .400                            -.0574  -.0442          -.1452
    .402                    -.0449
    .503                                                            -.1660
    .550                            -.0366  -.0466
    .565                    -.3402
    .600                                                    -.1089
    .637            -.0212
    .650                                            -.0888
    .670                                                            -.0079
    .700                                    -.1145
    .725                            -.0984
    .750                                             .1918   .2133
    .760                    -.1205
    .775                             .1429   .1069
    .798            -.1231
    .808                     .1539
    .834    -.1359
    .839             .1219
    .850                             .0557   .0270   .0820
    .857                     .0730
    .862                                                            -.0939
    .865     .1477
    .879             .0396
    .900    -.0132                  -.0468                   .0057
    .905                    -.0201
    .919            -.0491
```

AMES 11-073(OA148) -140A/B/C/R ORB LEFT WING BOT (XEBL38)

ALPHA (2) = .030 BETA (1) = -3.869

SECTION (1)LEFT WING BOT SURF DEPENDENT VARIABLE CP

2Y/BW	.2990	.3640	.4270	.5340	.6730	.7800	.8870	.9720
X/CW								
.950				-.0942	-.0544	-.0701		
.953			-.0923					
.955		-.1103						
.965	-.1058							
1.000			-.1674		-.1097		-.3360	

ALPHA (2) = .036 BETA (2) = 183 MACH = 1.3931 Q = 599.59 P = 441.36 RN/L = 2.9073

SECTION (1)LEFT WING BOT SURF DEPENDENT VARIABLE CP

2Y/BW	.2990	.3640	.4270	.5340	.6730	.7800	.8870	.9720
X/CW								
.010	-.0114	-.0016	.2439	-.0743	-.1960	-.1397	-.0652	
.020	.0000	-.0090	.2223	-.1799	-.2261	-.2527	-.2828	-.2455
.043		.0035	.0715					
.050	-.0239			-.1045	-.1884	-.2619	-.2959	
.069								-.2502
.080				-.1009				
.081			.0081					
.086		.0466						
.094	-.0413							
.150				-.0767	-.1331	-.1748	-.2168	
.157								-.1816
.163		.1183						
.177			-.0144					
.229	-.0401							
.246		.0123						
.250				-.0363	-.0524	-.1140	-.1832	
.274			-.0151					
[illegible]								-.1175
[illegible]		-.0092						
.400				-.0323	-.0348		-.0651	
[illegible]			-.0239					
[illegible]								-.0865
.550				-.0214	-.0273			
.565			-.3562					
[illegible]							-.0879	
[illegible]		-.0033						
[illegible]						-.0730		
[illegible]								.0324
[illegible]					-.0988			
[illegible]				-.0250				
[illegible]						.1985	.2042	
[illegible]			-.1104					

```
                                   AMES 11-073(CA148) -140A/B/C/R ORB LEFT WING BOT              (XE8L[illegible]

ALPHA ( 2) =      .035    BETA  ( 2) =      .183

 SECTION ( 1)LEFT WING BOT SURF                DEPENDENT VARIABLE CP

2Y/BW        .2990   .3540   .4270   .5340   .6730   .7800   .8870   .9720

  X/CW
   .775                              .1603   .1310
   .798              -.1113
   .808                      .1794
   .834     -.1236
   .839               .1323
   .850                              .0772   .0248   .0837
   .857                      .0809
   .862                                                              -.1105
   .865      .1357
   .879               .0414
   .890     -.0148                  -.0320                   .0125
   .905                     -.0129
   .919              -.0528
   .950                             -.0902  -.0446  -.0574
   .953                     -.0919
   .955              -.1085
   .965     -.1141
  1.000                     -.1759          -.1038          -.3402

ALPHA ( 2) =      .034    BETA  ( 3) =     4.255   MACH   =  1.3931     Q      =  599.59     P      =  441.36     RN/L   =  [illegible]

 SECTION ( 1)LEFT WING BOT SURF                DEPENDENT VARIABLE CP

2Y/BW        .2990   .3540   .4270   .5340   .6730   .7800   .8870   .9720

  X/CW
   .010     -.0749  -.0556   .2685  -.0214  -.1744  -.1559  -.0913
   .020      .0000  -.0351   .2439  -.0138  -.1091  -.2428  -.2914  -.1890
   .040             -.0169   .1187
   .050     -.0536                  -.0769  -.1815  -.2272  -.2827
   .069                                                             -.1822
   .080                             -.0598
   .081                      .0456
   .086              .0450
   .094     -.0499
   .150                             -.0406  -.0774  -.1258  -.1919
   .157                                                             -.1602
   .163              .1230
   .177                      .0083
   .229     -.0459
   .246              .0304
   .250                             -.0145  -.0393  -.0402  -.0678
   .274                      .0121
   .345                                                             -.0625
   .340              .0143
```

```
                           AMES 11-073(OA148) -140A/B/C/R ORB LEFT WING BOT              (XE8L38)

ALPHA ( 2) =      .034    BETA  ( 3) =     4.255

 SECTION ( 1)LEFT WING BOT SURF               DEPENDENT VARIABLE CP

2Y/BW        .2930   .3640   .4270   .5340   .6730   .7800   .8870   .9720

  X/CW
   .400                              -.0048  -.0071          -.0482
   .402                      .0002
   .503                                                              -.0954
   .550                              -.0074  -  02
   .565                     -.3423
   .600                                                      -.0654
   .637              .0086
   .650                                              -.0548
   .670                                                               .0518
   .700                                      -.0881
   .725                              -.0798
   .750                                               .2114   .2137
   .760                     -.0995
   .775                               .1832   .1446
   .798             -.0986
   .808                      .1856
   .834     -.1163
   .839              .1157
   .850                               .0971   .0307   .0868
   .857                      .0801
   .862                                                              -.1118
   .865      .1369
   .879              .0340
   .900     -.0124                   -.0188                   .0145
   .905                     -.0165
   .919             -.0563
   .950                              -.0933  -.0258  -.0359
   .953                     -.0996
   .955             -.1011
   .965     -.1142
  1.000                     -.1534           -.1148          -.2971

ALPHA ( 3) =     3.894    BETA  ( 1) =    -3.872   MACH   =  1.3932    Q      =  599.70     P      =  441.38     RN/L   =  2.9108

 SECTION ( 1)LEFT WING BOT SURF               DEPENDENT VARIABLE CP

2Y/BW        .2930   .3640   .4270   .5340   .6730   .7600   .8870   .9720

  X/CW
   [illegible] .0557 .0163   .3998   .2516   .1877   .1840   .2129
   [illegible] .0000 .0363   .3734   .1836   .1686   .0935   .0366   .0917
   [illegible]       .0528   .2085
   [illegible] .0481                 .0493   .0246   .0283   .0359
   [illegible]                                                        .0588
   [illegible]                       .0515
```

AMES 11-073(OA148) -140A/B/C/R ORB LEFT WING BOT (XEBL3E)

ALPHA (3 = 3.834 BETA (1) = -3.872

SECTION (1)LEFT WING BOT SURF DEPENDENT VARIABLE CP

2Y/BW	.2990	.3640	.4270	.5340	.6730	.7800	.8870	.9720
X/CW								
.081			.1294					
.086		.1095						
.094	.0281							
.150				.0538	.0644	.0708	.0820	
.157								-.0645
.163		.2034						
.177			.0860					
.233	.0263							
.246		.0793						
.250				.0796	.0748	.0881	.0702	
.274			.0728					
.345								.0381
.390		.0710						
.400				.0714	.0824		.0626	
.409			.0671					
.503								-.0013
[illegible]				.0736	.0861			
.585			-.4042					
.600							.0057	
.637		.0642						
.650						.0207		
.670								.1372
.700					-.0174			
.725				-.0145				
.750						.3382	.3155	
.760			-.0524					
.775				.2611	.2405			
.798		-.0594						
.808			.2595					
.834	-.0753							
.839		.2110						
.850				.1492	.1166	.1694		
.857			.1668					
.862								-.0187
.865	.2371							
.879		.1184						
.900	.0522			.0401			.0922	
.915			.0534					
.919		.0208						
[illegible]				-.0204	.0327	.0009		
[illegible]			-.0340					
.955		-.0620						
[illegible]	-.0684							
1.000			-.1035		-.2314		-.3925	

TABULATED PRESSURE DATA - OA148 (AMES 11-073-1)

AMES 11-073(OA148) -140A/B/C/R ORB LEFT WING BOT (XEBL38)

ALPHA (3) = 3. 35 BETA (2) = .183 MACH = 1.3932 Q = 599.70 P = 441.36 RN/L = 2.J108

SECTION (1)LEFT WING BOT SURF DEPENDENT VARIABLE CP

2Y/BW	.2990	.3640	.4270	.5340	.6730	.7800	.8870	.9720
X CW								
.010	-.0280	-.1452	.3446	.3004	.1978	.1843	.1974	
.020	.0000	-.0556	.3512	.2219	.1753	.1103	.0508	.0613
.040		-.0270	.2279					
.050	.0135			.1045	.0586	.0883	.0477	
.059								.0379
.080				.0907				
.081			.1464					
.086		.0645						
.094	.0036							
.150				.0751	.0831	.0883	.1063	
.157								-.0745
.163		.1792						
.177			.0970					
.229	.0057							
.246		.0879						
.250				.0877	.0864	.0933	.0701	
.274			.0928					
.345								.0117
.390		.0834						
.400				.0813	.0342		.0630	
.402			.0760					
.503								-.0246
.550				.0793	.0888			
.565			-.4183					
.600							.0119	
.637		.0742						
.650						.0244		
.670								.1445
.700					-.0177			
[illegible]				-.0111				
.750						.3528	.3192	
.760			-.0336					
.775				.2773	.2433			
.778		-.0464						
.808			.2794					
.814	-.0552							
.833		.2183						
[illegible]				.1709	.1113	.1614		
[illegible]			.1745					
[illegible]								-.0342
[illegible]	.0298							
[illegible]		.1140						
[illegible]	.0579			.0471			.0874	
[illegible]			.0594					
[illegible]		.0151						

AMES 11-073(OA149, -140A/B/C/R ORB LEFT WING BOT (XEBL38)

ALPHA (3) = 3.895 BETA (2) = .183

SECTION (1)LEFT WING BOT SURF DEPENDENT VARIABLE CP

2Y/BW	.2990	.3640	.4270	.5340	.6730	.7800	.8870	.9720
X/CW								
.950				-.0151	.0412	.0098		
.953			-.0315					
.955		-.0522						
.955	-.0628							
1.000			-.1376		-.1547		-.4116	

ALPHA (3) = 3.906 BETA (3) = 4.246 MACH = 1.3932 Q = 599.70 P = 441.36 RN/L = 2.9108

SECTION (1)LEFT WING BOT SURF DEPENDENT VARIABLE CP

2Y/BW	.2990	.3640	.4270	.5340	.6730	.7800	.8870	.9720
X/CW								
.010	-.1598	-.3713	.2647	.3387	.2776	.2100	.2393	
.020	.0000	-.1880	.2988	.2682	.2034	.1552	.1120	.0050
.040		-.1433	.2297					
.050	-.0531			.1575	.1030	.1137	.1056	
.059								.0043
.080				.1390				
.081			.1489					
.086		-.0101						
.094	-.0350							
.150				.0937	.1120	.1137	.1225	
.157								-.0898
.163		.1417						
.177			.1024					
.228	-.0194							
.246		.0828						
.250				.0978	.0992	.1019	.0789	
.274			.1048					
.345								-.0042
.390		.0883						
.400				.0933	.1162		.0779	
.490			.0868					
.503								-.0365
.540				.0840	.0925			
.565			-.0846					
.600							.0232	
637		.0816						
.650						.0339		
.670								.1375
.700					-.0106			
.725				-.0034				
.750						.3404	.3231	
.760			-.0329					

```
DATE 10 FEB 76          TABULATED PRESSURE DATA - OA148 ( AMES 11-073-1 )                                    PAGE 2117

                                 AMES 11-073(OA148) -140A/B/C/R ORB LEFT WING BOT                    (XE8L38)

ALPHA ( 3) =    3.906    BETA  ( 3) =    4.246

 SECTION ( 1)LEFT WING BOT SURF                    DEPENDENT VARIABLE CP

2Y/BW        .2990    .3640    .4270    .5340    .6730    .7800    .8870    .9720

  X/CW
    .775                                .3049    .2520
    .799              -.0342
    .808                       .2761
    .834     -.0515
    .839               .2021
    .850                                .1841    .1195    .1625
    .857                       .1554
    .862                                                                    -.0481
    .865      .2141
    .879               .1069
    .900      .0582                     .0508                      .0659
    .905                       .0509
    .919               .0145
    .950                               -.0278    .0456    .0268
    .953                      -.0310
    .955              -.0441
    .965     -.0567
   1.000                      -.1587             -.1564            -.3717
ALPHA ( 4) =    7.922    BETA  ( 1) =   -3.061   MACH   =  1.3932    Q     =  599.39    P     =  441.12    RN/L  =  2.9102

 SECTION ( 1)LEFT WING BOT SURF                    DEPENDENT VARIABLE CP

2Y/BW        .2990    .3640    .4270    .5340    .6730    .7800    .8870    .9720

  X/CW
    .010      .0109   -.1212    .4309    .5159    .4604    .5234    .5358
    .020      .0000    .0083    .4542    .3872    .4071    .4130    .4059    .1408
    .040               .0430    .3526
    .050      .0894                      .2818    .2787    .3175    .3602
    .069                                                                     .1545
    .080                                 .2463
    .081                        .2535
    .086               .1548
    .094      .0646
    .150                                 .1986    .2598    .2896    .2969
    .157                                                                    -.0265
    .163               .2898
    .177                        .2028
    .223      0933
    .246               .1751
[illegible]                              .2089    .2285    .2529    .2264
[illegible]                     .1969
[illegible]                                                                  .1337
[illegible]            .1903
```

```
DATE [illegible]                  TABULATED PRESSURE DATA - OA148 ( A [illegible] )

                                        ARCS 11-073(OA148) -[illegible]/R ORB LEFT WING BOT          [illegible]

ALPHA ( [illegible] =   [illegible]     BETA  ( [illegible] =   -3.861

 SECTION ( [illegible] LEFT [illegible] BOT SURF                DEPENDENT VARIABLE CP

2Y/BW          [illegible]  [illegible]  .4270   .5340   .6730   .7900   .8870   .9720

  X/CW
    .400                                    .1956   .2513           .2077
    .408                           .1799
    .5[illegible]                                                                   .0971
    .550                                    .1957   .2013
    .565                          -.[illegible]213
    .600                                                            .1242
    .6[illegible]               .1629
    .6[illegible]                                                   1299
    .6[illegible]                                                                   .2820
    .[illegible]                                            .0669
    .7[illegible]                                   .0575
    .7[illegible]                                                   .4547   .4379
    .7[illegible]                          .0279
    .7[illegible]                                   .4050   .3539
    .7[illegible]                [illegible]141
    .8[illegible]                          .0963
    .8[illegible]    -.0023
    .8[illegible]                [illegible]307
    .8[illegible]                                   .2501   .2069   .2369
    .8[illegible]                          .2673
    .8[illegible]                                                                   .0516
    .8[illegible]     .3292
    .873                .2795
    .9[illegible]     .1759                         .1331                   .1593
    .9[illegible]                          .[illegible]23[illegible]
    .919                .0763
    .9[illegible]                                   .0263   .1109   .0026
    .9[illegible]                          .0352
    .955                .0009
    .955     -.0168
   1.000                          -.144[illegible]          -.2273          -.[illegible]754

ALPHA ( [illegible] =    7.992     BETA ( [illegible] 2 =      .[illegible]   MACH  =  [illegible]7932     [illegible]     [illegible]

 SECTION ( [illegible] LEFT WING BOT SURF                DEPENDENT VARIABLE CP

2Y/BW          .2990   .3640   .4270   .5340   .6730   [illegible]   .8670   .9720

  X/CW
    .010   -.1280  -.3357   .[illegible]   .0234   [illegible]   .[illegible]   .5[illegible]
    .0[illegible]   [illegible]   -.1215   .[illegible]   .4[illegible]   [illegible]   [illegible]   .4[illegible]   .0256
    .0[illegible]            -.0700   .32[illegible]
    .0[illegible]    .0209                    .3177   .[illegible]   .[illegible]   .3[illegible]
    .0[illegible]                                                                     0[illegible]
    [illegible]                                  .2721
```

REPRODUCIBILITY OF THE ORIGINAL PAGE IS POOR

```
DATE 10 FEB 76              TABULATED PRESSURE DATA - OA148 ( AMES 11-073-1 )                                      PAGE 2119

                                  AMES 11-073(OA148) -140A/B/C/R ORB LEFT WING BOT                  (XEBL38)

ALPHA (  1) =     7.892    BETA  ( 2) =      .182

 SECTION ( 1) LEFT WING BOT SURF              DEPENDENT VARIABLE CP

2Y/BW        .2990    .3540    .4270    .5340    .6730    .7800    .8870    .9720

  X/CW
   .081                        .2492
   .085               .0742
   .094      .0374
   .150                                 .2079    .2630    .2827    .2924
   .157                                                                      -.0466
   .163               .2381
   .177                        .1952
   .229      .0596
   .246               .1668
   .250                                 .2058    .2346    .2481    .2220
[illegible]                    .1932
   .345                                                                       .0954
   .390               .1762
   .400                                 .1959    .2431             .2164
   .422                        .1784
   .503                                                                       .0438
[illegible]                             .1796    .1385
[illegible]                   -.4233
   .600                                                            .1098
   .637               .1653
   .650                                                   .1185
   .670                                                                       .2413
   .700                                          .0678
   .725                                 .0722
   .750                                                   .4390    .4187
   .760                        .0409
   .775                                 .4237    .3508
   .793               .0315
   .818                        .3998
   .834      .0199
   .879               .3216
[illegible]                             .2532    .2139    .2382
[illegible]                    .3645
[illegible]                                                                   .02
[illegible]  .3268
[illegible]           .2057
[illegible]  .1434                      .1239                      .1332
[illegible]                    .1230
[illegible]           .0300
[illegible]                             .0532    .1193    .0833
[illegible]                    .0416
[illegible]           .0208
[illegible]  .0118
[illegible]                   -.1701             -.2756            -.4828
```

```
                                 AMES 11-073(OA148) -140A/B/C/R ORB LEFT WING BOT           (XEEL3S)
ALPHA ( 4) =    7.830    BETA  ( 3) =    4.245   MACH   =  1.3932     Q     =  599.39     P     =  441.12    RN/L   =  [illegible]
 SECTION ( 1)LEFT WING BOT SURF             DEPENDENT VARIABLE CP

2Y/BW        .2990   .3840   .  70   .5340   .6730   .7800   .8870   .9720

  X/CW
   .010    -.2794  -.4245   .1079   .4813   .4505   .5068   .5032
   .020     .0000  -.2170   .2204   .4176   .4143   .4294   .4164  -.0960
   .040            -.1624   .2549
   .050    -.0541                   .3183   .3067   .3291   .3694
   .059                                                             -.0198
   .080                             .2628
   .081                     .2005
   .085             .0070
   .094    -.0193
   .150                             .2064   .2607   .2728   .2858
   .157                                                             -.0747
   .163             .1767
   .177                     .1733
   .229     .0237
   .246             .1355
   .250                             .1993   .2266   .2427   .2290
   .274                     .1835
   .345                                                              .0455
   .390             .1570
   .400                             .1950   .2359           .2179
   .402                     .1755
   .503                                                              .0070
   .550                             .1750   .1930
   .565                    -.4178
   .600                                                     .1019
   .637             .1691
   .650                                             .1268
   .670                                                              .2264
   .700                                     [illegible]
   .725                             .0757
   .750                                             .4315   .4240
   .760                     .0396
   .775                             .4323   .3563
   .798             .0480
   .808                     .3761
   .834     .0201
   .839             .2070
   .850                             .2612   .2123   .2517
   .857                     .2412
   .862                                                              .0088
   .865     .3062
   .879             .1853
   .900     .1393                   .1216                   .1218
   .905                     .1237
   .919             .0855
```

AMES 11-073(OA148) -140A/B/C/R ORB LEFT WING BOT (XEBL38)

ALPHA (4) = 7.830 BETA (3) = 4.245

SECTION (1)LEFT WING BOT SURF DEPENDENT VARIABLE CP

2Y/BW	.2990	.3640	.4270	.5340	.6730	.7800	.8870	.9720
X/CW								
.950				.0430	.0924	.1010		
.953			.0384					
.955		.0293						
.955	.0284							
1.000			-.1467		-.1805		-.4394	

ALPHA (5) = 11.870 BETA (1) = -3.851 MACH = 1.3941 Q = 600.12 P = 441.12 RN/L = 2.9072

SECTION (1)LEFT WING BOT SURF DEPENDENT VARIABLE CP

2Y/BW	.2990	.3640	.4270	.5340	.6730	.7800	.8870	.9720
X/CW								
.010	-.1061	-.2775	.3732	.6785	.6553	.7243	.7257	
.020	.0000	-.0336	.4788	.5709	.6013	.6216	.6431	.0775
.040		.0232	.4578					
.050	.1023			.4716	.4866	.5158	.5536	
.063								.1545
.080				.4026				
.081			.3779					
.085		.1845						
.094	.1267							
.150				.3477	.4107	.4440	.4385	
.157								.0043
.163		.3638						
.177			.3166					
.229	.1560							
.245		.2725						
.250				.3400	.3722	.3993	.3766	
.274			.3161					
.345								.1837
.393		.2918						
.400				.3204	.3776		.3502	
.402			.3008					
.503								.1490
.550				.2855	.3084			
.555			-.4466					
.600							.2055	
.637		.2527						
.650						.2132		
.670								.3674
.700					.1529			
[illegible]				.1568				
[illegible]						.6055	.5424	
.760			.1157					

```
                                AMES 11-073(OA148) -140A/B/C/R ORB LEFT WING BOT             (XE8L38)

ALPHA ( 5) =   11.870    BETA  ( 1) =   -3.851

 SECTION ( 1)LEFT WING BOT SURF            DEPENDENT VARIABLE CP

2Y/BW        .2990   .3640   .4270   .5340   .6730   .7800   .8870   .9720

  X/CW
    .775                             .5835   .4809
    .798             .1048
    .808                     .5380
    .834     .0925
    .839             .4535
    .850                             .3589   .3259   .3339
    .857                     .3569
    .862                                                             .1177
    .855     .4711
    .879             .2998
    .900     .2388                   .2222                   .2213
    .905                     .2034
    .919             .1693
    .950                             .1381   .1924   .1752
    .953                     .1171
    .955             .0846
    .965     .0607
   1.000                    -.1383          -.3347          -.5215
ALPHA ( 5) =   11.880    BETA  ( 2) =     .187  MACH   =  1.3941     Q      =  600.12     P      =  441.12     RN/L   =  2.9072

 SECTION ( 1)LEFT WING BOT SURF            DEPENDENT VARIABLE CP

2Y/BW        .2990   .3640   .4270   .5340   .6730   .7800   .8870   .9720

  X/CW
    .010    -.2426  -.3767   .1946   .6243   .6158   .6675   .6651
    .020     .0000  -.1363   .3268   .5470   .5737   .5937   .6119  -.0711
    .040            -.0742   .3757
    .050     .0276                   .4570   .4783   .4998   .5349
    .069                                                             .0475
    .080                             .3918
    .081                     .3187
    .086             .1113
    .094     .0761
    .150                             .3458   .4011   .4274   .4352
    .157                                                            -.0370
    .163             .3019
    .177                     .2953
    .229     .1149
    .246             .2417
    .250                             .3238   .3600   .3919   .3673
    .274                     .3060
    .345                                                             .1275
    .390             .2795
```

AMES 11-073(OA148) -140A/B/C/R ORB LEFT WING BOT (XEBL38)

ALPHA (5) = 11.880 BETA (2) = .187

SECTION (1)LEFT WING BOT SURF DEPENDENT VARIABLE CP

2Y/BW	.2990	.3640	.4270	.5340	.6730	.7800	.8870	.9720
X/CW								
.400				.3157	.3685		.3306	
.402			.2887					
.503								.0965
.550				.2811	.3022			
.565			-.4756					
.600							.1732	
.637		.2615						
.650						.2040		
.670								.3350
.700					.1491			
.725				.1585				
.750						.5846	.5308	
.760			.1223					
.775				.6113	.4797			
.793		.1331						
.808			.5372					
.834	.1045							
.839		.4311						
.850				.3595	.3230	.3396		
.857			.3537					
.862								.0894
.865	.4443							
.879		.2965						
.900	.2461			.2163			.2118	
.905			.2078					
.919		.1734						
.950				.1261	.1803	.1708		
.953			.1211					
.955		.0967						
.965	.0877							
1.000			-.1309		-.2935		-.5248	

ALPHA (5) = 11.873 BETA (3) = 4.255 MACH = 1.3941 Q = 600.12 P = 441.12 RN/L = 1.9072

SECTION (1)LEFT WING BOT SURF DEPENDENT VARIABLE CP

2Y/BW	.2990	.3640	.4270	.5340	.6730	.7800	.8870	.9720
X/CW								
.010	-.3458	-.4349	.0064	.5287	.5432	.5745	.5798	
[illegible]	.0000	-.2423	.1785	.4961	.5288	.5502	.5569	-.1999
[illegible]		-.1692	.2887					
.050	-.0456			.4188	.4473	.4624	.4992	
.059								-.0522
.080				.3610				

AMES 11-073(OA148) -140A/B/C/R ORB LEFT WING BOT (XEBL38)

ALPHA (5) = 11.873 BETA (3) = 4.255

SECTION (1)LEFT WING BOT SURF DEPENDENT VARIABLE CP

2Y/BW	.2990	.3640	.4270	.5340	.6730	.7800	.8870	.9720
X/CW								
.081			.2551					
.086		.0254						
.094	.0199							
.150				.3208	.3751	.4137	.4206	
.157								-.0719
.163		.2301						
.177			.2525					
.229	.0757							
.246		.1963						
.250				.3006	.3399	.3801	.3724	
.274			.2786					
.345								.0956
.390		.2407						
.400				.3034	.3593		.3138	
.402			.2757					
.503								.0658
.550				.2720	.2914			
.565			-.4393					
.600							.1697	
.637		.2540						
.650						.1989		
.670								.3129
.700					.1499			
.725				.1513				
.750						.5767	.5256	
.760			.1213					
.775				.5972	.4684			
.799		.1547						
.809			.4753					
.834	.0980							
.839		.3964						
.850				.3453	.3143	.3467		
.857			.3256					
.862								.0731
.865	.4022							
.879		.2892						
.900	.2429			.2111			.2064	
.905			.2055					
.919		.1841						
.950				.1191	.1712	.1790		
.953			.1185					
.955		.1109						
.965	.1050							
1.000			-.2222		-.1947		-.4727	

```
                                   AMES 11-073(OA148) -140A/B/C/R ORB LEFT WING BOT              (XE8L38)

ALPHA ( 6) =   15.853    BETA  ( 1) =   -3.829   MACH   =  1.3929     Q      =  599.99     P      =  441.82     RN/L   =  2.9183

 SECTION ( 1)LEFT WING BOT SURF               DEPENDENT VARIABLE CP

2Y/BW        .2330    '640   .4270   .5340   .6730   .7800   .8870   .9720

  X/CW
    .010   -.1994  -.3177   .2914   .7649   .7771   .8030   .7958
    .020    .0000  -.0447   .4541   .7000   .7396   .7679   .7708  -.0195
    .040             .0253   .5170
    .050    .1239                   .6116   .6470   .6798   .7093
    .059                                                             .1348
    .080                            .5472
    .081                     .4647
    .086             .2288
    .094    .1782
    .150                            .4987   .5571   .6031   .5806
    .157                                                             .0120
    .163             .4462
    .177                     .4307
    .229    .2255
    .246             .3597
    .250                            .4608   .5192   .5617   .5089
    .274                     .4363
    .345                                                             .2479
    .390             .4117
    .400                            .4552   .5133           .4587
    .402                     .4188
    .503                                                             .2133
    .550                            .4100   .4191
    .555                    -.4757
    .600                                                     .2758
    .637             .3753
    .659                                            .3035
    .670                                                             .4307
    .700                                    .2505
    .725                            .2614
    .750                                            .7499   .6331
    .760                     .2363
    .775                            .7781   .6258
    .798             .2571
    .808                     .6652
    .834    .2151
    .833             .5568
    .850                            .4420   .4039   .4169
    .857                     .4292
    .862                                                             .1777
    .865    .6018
    .877             .3776
    .900    .3340                   .2893                   .2874
    .905                     .2713
    .919             .2423
```

```
DATE 10 FEB 76              TABULATED PRESSURE DATA - OA148 ( AMES 11-073-1 )                                          PAGE 2125

                                   AMES 11-073(OA148) -140A/B/C/R ORB LEFT WING BOT                  (XE8L38)

ALPHA ( 6) =   15.853    BETA  ( 1) =   -3.829

 SECTION ( 1)LEFT WING BOT SURF                 DEPENDENT VARIABLE CP

2Y/BW        .2990   .3640   .4270   .5340   .6730   .7800   .8870   .9720

  X/CW
   .950                              .1934   .2583   .2476
   .953                      .1798
   .955              .1438
   .965      .1307
  1.000                     -.1783          -.3448          -.5706

ALPHA ( 6) =   15.865    BETA  ( 2) =     .185   MACH   =  1.3929     Q     =  599.99     P     =  441.82    RN/L   =  2.9183

 SECTION ( 1)LEFT WING BOT SURF                 DEPENDENT VARIABLE CP

2Y/BW        .2990   .3640   .4270   .5340   .6730   .7800   .8870   .9720

  X/CW
   .010     -.3017  -.3944   .1026   .6558   .6853   .6886   .6767
   .020      .0000  -.1518   .2959   .6331   .6813   .6963   .6915  -.1510
   .040             -.0828   .4262
   .050      .0471                   .5669   .6163   .6290   .6550
   .069                                                               .0209
   .080                              .5111
   .081                      .3914
   .085              .1375
   .094      .1082
   .150                              .4643   .5322   .5706   .5401
   .157                                                              -.0347
   .163              .3694
   .177                      .3959
   .229      .1779
   .246              .3215
   .250                              .4424   .4906   .5306   .4739
   .274                      .4162
   .345                                                               .1884
   .390              .3810
   .400                              .4341   .4934           .4271
   .402                      .4103
   .503                                                               .1736
   .550                              .4063   .4016
   .565                     -.4829
   .600                                                      .2543
   .637              .3742
   .650                                              .2843
   .670                                                               .3984
   .700                                      .2592
   .725                              .2800
   .750                                              .7197   .6033
   .760                      .2603
```

```
                                      AMES 11-073(OA148) -140A/B/C/R ORB LEFT WING BOT           (XEBL38)

ALPHA ( 6) =   15.866    BETA  ( 2) =     .185

 SECTION ( 1)LEFT WING BOT SURF            DEPENDENT VARIABLE CP

2Y/BW        .2990   .3640   .4270   .5340   .6730   .7800   .8870   .9720

 X/CW
   .775                              .7536   .5984
   .798              .3017
   .808                      .6335
   .834      .2218
   .839              .5265
   .850                              .4243   .3848   .4070
   .857                      .4164
   .862                                                              .1422
   .865      .5641
   .879              .3795
   .900      .3390                   .2770                   .2708
   .905                      .2724
   .919              .2443
   .950                              .1793   .2450   .2370
   .953                      .1821
   .955              .1638
   .985      .1552
  1.000                     -.2942          -.3345          -.5563
ALPHA ( 6) =   15.858    BETA  ( 3) =    4.285   MACH   =  1.3929    Q      =  599.99     P      =  441.82     RN/L   =  2.9183

 SECTION ( 1)LEFT WING BOT SURF            DEPENDENT VARIABLE CP

2Y/BW        .2990   .3640   .4270   .5340   .6730   .7800   .8870   .9720

 X/CW
   .010     -.3761  -.4692  -.0767   .5315   .5791   .5657   .5539
   .020      .0000  -.2420   .1474   .5495   .5981   .6168   .6045  -.2432
   .040             -.1707   .3215
   .060     -.0225                   .5076   .5609   .5740   .5967
   .069                                                             -.0563
   .080                              .4653
   .081                      .3186
   .085              .0655
   .094      .0544
   .150                              .4295   .4963   .5385   .5104
 [illegible]                                                        -.0689
   .153              .2971
   .177                      .3404
   .223      .1277
   .245              .2690
   .250                              .4058   .4684   .5035   .4586
   .274                      .3859
   .345                                                              .1382
   .390              .3470
```

```
                                AMES 11-073(OA148) -140A/B/C/R ORB LEFT WING BOT          (XEBL38)

ALPHA ( 6) =   15.859    BETA  ( 3) =    4.285

 SECTION ( 1)LEFT WING BOT SURF            DEPENDENT VARIABLE CP

2Y/BW        .2990   .3540   .4270   .5340   .6730   .7800   .8870   .9720

  X/CW
    .400                             .4190   .4627           .4054
    .402                     .3855
    .503                                                             .1792
    .550                             .3801   .3910
    .565                    -.4666
    .600                                                     .2467
    .637             .3569
    .650                                             .2784
    .670                                                             .3649
    .700                                     .3013
    .725                             .2985
    .750                                             .6946   .5921
    .760                     .3068
    .775                             .7130   .5633
    .794             .3183
    .808                     .5879
    .834     .2109
    .839             .4959
    .850                             .4043   .3685   .4030
    .857                     .4065
    .862                                                             .1174
    .865     .5333
    .879             .3747
    .900     .3458                   .2734                   .2595
    .905                     .2723
    .919             .2471
    .950                             .1774   .2344   .2346
    .953                     .1840
    .955             .1742
    .965     .1754
   1.000                    -.2950          -.3709          -.4975
```

```
DATE 10 FEB 76           TABULATED PRESSURE DATA - OA148 ( AMES 11-073-1 )                                          PAGE 2129

                                        AMES 11-073(OA148) -140A/B/C/R ORB LEFT WING BOT             (XEBL39)    ( 05 AUG 75  )

                  REFERENCE DATA                                                                        PARAMETRIC DATA

SREF   =  2690.0000 SQ.FT.    XMRP  =  1076.6800 IN. XO                                  RUDDER =    10.000   SPDBRK =     85.000
LREF   =   474.8000 IN.       YMRP  =      .0000 IN. YO                                  BDFLAP =    16.300   L-ELVN =     10.000
BREF   =   936.0680 IN.       ZMRP  =   375.0000 IN. ZO                                  R-ELVN =    10.000   MACH   =      1.250
SCALE  =      .0300

ALPHA ( 1) =   -3.991    BETA  ( 1) =   -3.847   MACH   =  1.2464     Q      =  599.79     P      =  551.57     RN/L   =  3.0146

 SECTION ( 1)LEFT WING BOT SURF              DEPENDENT VARIABLE CP

2Y/BW       .2990    .3640    .4270    .5340    .6730    .7800    .8870    .9720

  X/CW
   .010    -.1475   -.2793   -.1961   -.4038   -.5046   -.3540   -.3267
   .020     .0000   -.2634   -.3059   -.5523   -.5439   -.5638   -.5586   -.6019
   .040             -.2639   -.3436
   .050    -.1482                     -.5760   -.5731   -.5950   -.5877
   .069                                                                   -.6538
   .080                               -.5376
   .081                      -.2385
   .086             -.1425
   .094    -.1454
   .150                               -.4945   -.5131   -.5285   -.5389
   .157                                                                   -.3830
   .163             -.0589
   .177                      -.2157
   .229    -.1303
   .246             -.1377
   .260                               -.2354   -.4593   -.4783   -.4979
   .274                      -.1951
   .345                                                                   -.5889
   .390             -.1649
   .400                               -.2008   -.2766            -.4437
[illegible]                  -.1641
   .503                                                                   -.5567
   .540                               -.1411   -.1787
[illegible]                  -.3775
[illegible]                                                      -.4145
[illegible]         -.1103
[illegible]                                             -.2277
[illegible]                                                               -.4540
[illegible]                                    -.2209
[illegible]                           -.1994
[illegible]                                              .1161   -.1530
[illegible]                  -.2029
[illegible]                            .0704    .0099
[illegible]         -.1842
[illegible]                   .0853
[illegible] -.2120
[illegible]          .0550
[illegible]                           -.0324   -.0317    .0008
```

```
DATE 10 FEB 75              TABULATED PRESSURE DATA - OA148 ( AMES 11-073-1 )                              PAGE [illegible]

                                      AMES 11-073(OA148) -140A/B/C/R ORB LEFT WING BOT                (KEBL39)

ALPHA (1) =   -3.791     BETA    (1) =   -3.847

 SECTION ( 1)LEFT WING BOT SURF               DEPENDENT VARIABLE CP

2Y/BW        .2990   .3540   .4270   .5340   .6730   .7800   .8870   .9720

  X/CW
   .657                      -.0040
   .662                                                              -.4336
   .665      [illegible]
   .679              -.0783
   .700      -.0459                  -.1125                  -.1726
   .705                      -.1177
   .719              -.1441
   .740                              -.1622  -.1000  -.1536
   .743                      -.1951
   .745              -.2016
   .765      -.2032
  1.000                      -.2193          -.1775          -.1621

ALPHA (1) =   -3.979     BETA    (2) =     .190   MACH   =  1.254     Q      =  599.79     P      =  551.57     RN/L   =  3.[illegible]1-5

 SECTION ( 1)LEFT WING BOT SURF               DEPENDENT VARIABLE CP

2Y/BW        .2990   .3540   .4270   .5340   .6730   .7800   .8870   .9720

  X/CW
   .010      -.0935  -.1330  -.0841  -.4047  -.5308  -.3954  -.3784
   .020       .0000  -.1427  -.1412  -.5519  -.5587  -.5963  -.5748  -.6602
   .040              -.1370  -.2004
   .050      -.1151                  -.5249  -.5884  -.6237  -.6230
   .069                                                              -.6839
   .080                              -.4962
   .081                      -.1945
   .086              -.0702
   .094      -.1144
   .150                              -.2899  -.5112  -.5454  -.5699
   .157                                                              -.3964
   .163              -.0013
   .177                      -.1699
   .229      -.0845
   .246              -.0998
   .250                              -.1906  -.3931  -.4936  -.5282
   .274                      -.1440
   .315                                                              -.6233
   .340              -.1055
   .417                              -.1444  -.1699          -.[illegible]4
   .450                      -.1169
   .472                                                              -.6157
   .500                              -.1165  -.1369
   .645                      -.4160
   .700                                                      -.3223
```

```
                                   AMES 11-073(OA148) -140A/B/C/R ORB LEFT WING BOT              (XEBL39)

ALPHA ( 1) =    -3.979    BETA  ( 2) =      .190

 SECTION ( 1)LEFT WING BOT SURF                  DEPENDENT VARIABLE CP

2Y/BW        .2990   .3640   .4270   .5340   .6730   .7800   .8870   .9720

  X/CW
   .637              -.0306
   .650                                              -.1815
   .670                                                              -.4694
   .700                                      -.1974
   .725                              -.1882
   .750                                               .1429   .1399
   .760                      -.2023
   .775                               .0892   .0244
   .779              -.1752
   .808                       .0903
   .834     -.2046
   .839               .0479
   .850                              -.0197  -.0522   .0121
   .857                      -.0035
   .862                                                              -.3450
   .865      .0548
   .873              -.0453
   .900     -.1053                   -.1289                  -.0748
   .905                      -.1170
   .919              -.1514
   .950                              -.1778  -.1165  -.1300
   .953                      -.2084
   .955              -.2030
   .955     -.2084
  1.000                      -.2625          -.2391          -.1343
ALPHA ( 1) =    -3.989    BETA  ( 3) =     4.277   MACH   =   1.2464    Q     =  599.79    P     =  551.57    RN/L   =  3.0146

 SECTION ( 1)LEFT WING BOT SURF                  DEPENDENT VARIABLE CP

2Y/BW        .2990   .3640   .4270   .5340   .6730   .7800   .8870   .9720

  X/CW
   .010     -.0904  -.0447   .0236  -.3904  -.5370  -.4269  -.4160
   .020      .0000  -.0595   .0153  -.5291  -.5744  -.6084  -.6141  -.6869
   .040             -.0505  -.0913
 [illegible] -.1020                  -.4495  -.5872  -.6330  -.6396
 [illegible]                                                         -.6623
 [illegible]                         -.3764
 [illegible]                 -.1106
 [illegible]         -.0090
 [illegible] -.0929
 [illegible]                         -.2073  -.4686  -.5434  -.5749
 [illegible]                                                         -.3895
 [illegible]          .0607
```

AMES 11-073(OA148) -140A/B/C/R ORB LEFT WING BOT (XIBL39)

ALPHA (1) = -3.958 BETA (3) = 4.277

SECTION (1)LEFT WING BOT SURF DEPENDENT VARIABLE CP

2Y/BW	.1930	.3040	.4270	.5340	.6730	.7800	.8870	.9720
X/CW								
.177			-.1099					
.229	-.0650							
.246		-.0453						
.250				-.1396	-.1891	-.4080	-.5314	
.274			-.0987					
.345								-.6054
.350		-.0534						
.400				-.1067	-.1302		-.3725	
.412			-.0937					
.503								-.5479
.530				-.0950	-.1103			
.555			-.3595					
.600							-.1567	
.627		-.0742						
.650						-.1625		
.670								-.0131
.700					-.1795			
.725				-.1817				
.750						.1426	.1672	
.760			-.1936					
.775				.0956	.0469			
.793		-.1448						
.808			.0935					
.834	-.2035							
.839		.0209						
.850				.0049	-.0562	.0112		
.857			-.0161					
.862								-.1083
.865	.0904							
.879		-.0591						
.900	-.1047			-.1773			-.0706	
[illegible]			-.1232					
[illegible]		-.1539						
.940				-.1976	-.1111	-.1113		
.943			-.2052					
.955		-.1930						
.965	-.2035							
1.000			-.2680		-.2756		-.1446	

AMES 11-073(OA148) -140A/B/C/R ORB LEFT WING BOT (XEBL39)

ALPHA (2) = .058 BETA (1) = -3.868 MACH = 1.2468 Q = 599.66 P = 551.10 RN/L = 3.0101

SECTION (1)LEFT WING BOT SURF DEPENDENT VARIABLE CP

2Y/BW	.2330	.3640	.4270	.5340	.6730	.7800	.8870	.9720
X/CW								
.010	.0059	.0131	.2104	-.1824	-.2920	-.2148	-.1331	
.020	.0000	-.0226	.1725	-.3263	-.3486	-.3615	-.3881	-.3275
.040		-.0179	-.0106					
.050	-.0317			-.2442	-.3316	-.3790	-.3960	
.069								-.3581
.080				-.2146				
.081			-.0468					
.086		.0240						
.094	-.0562							
.150				-.1415	-.2274	-.2672	-.3169	
.157								-.2328
.163		.0909						
.177			-.0636					
.223	-.0567							
.246		-.0309						
.250				-.0865	-.0964	-.1954	-.2659	
.274			-.0526					
[illegible]								-.1961
.330		-.0418						
.400				-.0676	-.0689		-.1196	
.402			-.0525					
.503								-.1372
.550				-.0342	-.0500			
.565			-.4337					
.600							-.1127	
.637		-.0209						
.650						-.1052		
.670								-.0035
[illegible]					-.1310			
[illegible]				-.1199				
[illegible]						.2570	.2266	
.760			-.1341					
.775				.2035	.1393			
[illegible]		-.1348						
[illegible]			.2101					
[illegible]	-.1513							
[illegible]		.1653						
[illegible]				.0736	.0628	.0673		
[illegible]			.0330					
[illegible]								-.1415
[illegible]	.1392							
[illegible]		.0462						
[illegible]	[illegible]			-.0226			-.0360	
[illegible]			-.0383					
[illegible]		-.0937						

```
                                AMES 11-073(OA148) -140A/B/C/R ORB LEFT WING BOT            (XE8L33)

ALPHA ( 2) =     .055    BETA  ( 1) =   -3.869

 SECTION ( 1)LEFT WING BOT SURF              DEPENDENT VARIABLE CP

2Y/BW        .2990   .3640   .4270   .5340   .6730   .7800   .8870   .9720

  X/CW
   .950                              -.0910  -.0486  -.0824
   .953                      -.1143
   .955              -.1431
   .965      -.1485
  1.000                      -.1285          -.0978          -.3514

ALPHA ( 2) =     .062    BETA  ( 2) =     .177   MACH   =  1.2469     Q      =  599.65     P      =  551.10     RN/L   =  3.0101

 SECTION ( 1)LEFT WING BOT SURF              DEPENDENT VARIABLE CP

2Y/BW        .2990   .3640   .4270   .5340   .6730   .7800   .8870   .9720

  X/CW
   .010      -.0399   .0038   .2593  -.1648  -.3057  -.2539  -.1790
   .020       .0000  -.0056   .2230  -.1856  -.2960  -.3753  -.4205  -.3263
   .040               .0062   .0527
   .050      -.0478                  -.1733  -.2785  -.3597  -.4243
   .063                                                              -.3190
   .080                              -.1483
   .091                      -.0012
   .096               .0509
   .134      -.0635
   .150                              -.0995  -.1543  -.2377  -.3142
   .157                                                              -.2144
   .163               .1151
   .177                      -.0322
   .223      -.0447
   .245              -.0073
   .250                              -.0465  -.0795  -.0813  -.1209
   .274                      -.0263
   .345                                                              -.0938
   .393              -.0042
   .400                              -.0257  -.0265          -.0819
   .402                      -.0142
   .503                                                              -.1405
   .550                              -.0187  -.0229
   .565                      -.4623
   .600                                                      -.0934
   .637              -.0030
   .650                                              -.0958
   .670                                                               .0436
   .700                                      -.1174
   .725                              -.1069
   .750                                               .2589   .2348
   .760                      -.1277
```

```
                                   AMES 11-073(OA148) -140A/B/C/R ORB LEFT WING BOT               (XE8L39)

ALPHA ( 2) =      .062    BETA  ( 2) =      .177

 SECTION ( 1)LEFT WING BOT SURF               DEPENDENT VARIABLE CP

2Y/BW        .2990   .3640   .4270   .5340   .6730   .7800   .8870   .9720

  X/CW
    .775                             .2144   .1444
    .798             -.1268
    .808                     .2157
    .834    -.1461
    .839             .1598
    .850                             .0779   .0533   .0713
    .657                     .0910
    .662                                                             -.1426
    .665     .1665
    .879             .0405
    .900    -.0201                   -.0314                  -.0265
    .905                     -.0464
    .913             -.0834
    .950                             -.1008  -.0390  -.0740
    .953                     -.1381
    .955             -.1469
    .965    -.1584
   1.000                     -.1533          -.1188          -.3121
ALPHA ( 2) =      .021    BETA  ( 3) =    4.254   MACH   =  1.2468      Q      =  599.66      P      =  551.10      RN/L   =  3.0101

 SECTION ( 1)LEFT WING BOT SURF               DEPENDENT VARIABLE CP

2Y/BW        .2990   .3640   .4270   .5340   .6730   .7800   .8870   .9720

  X/CW
    .010    -.1203  -.0597   .2900  -.0477  -.2573  -.2668  -.2002
    .020     .0000  -.0362   .2637  -.0564  -.1792  -.3478  -.4184  -.1909
    .040            -.0169   .1137
    .050    -.0830                   -.1075  -.2268  -.2764  -.3588
    .069                                                             -.1855
    .080                             -.0756
    .081                     .0531
    .085             .0496
    .094    -.0885
    .150                             -.0585  -.0871  -.1007  -.1396
    .157                                                             -.1415
    .163             .1318
    .177                     .0024
    .223    -.0540
    .246             .0349
    .250                             -.0158  -.0466  -.0567  -.0942
    .274                     .0124
    .345                                                              .0931
    .330             .0217
```

```
                                     AMES 11-073(OA148) -140A/B/C/R ORB LEFT WING BOT              (XE8L39)

ALPHA ( 2) =       .021    BETA  ( 3) =     4.254

 SECTION ( 1)LEFT WING BOT SURF               DEPENDENT VARIABLE CP

2Y/BW        .2990     .3640     .4270     .5340     .6730     .7800     .8870     .9720

  X/CW
    .400                                  -.0006     .0043               -.0580
    .402                          .0081
    .503                                                                           -.1261
    .550                                  -.0033    -.0100
    .565                        -.4281
    .600                                                                 -.0904
    .637              -.0001
    .650                                                      -.0756
    .670                                                                             .0616
    .700                                            -.1070
    .725                                  -.1058
    .750                                                       .2562      .2279
    .760                        -.1280
    .775                                   .2204     .1520
    .798              -.0973
    .808                          .2116
    .834    -.1365
    .839                .1287
    .850                                   .0810     .0445     .0668
    .857                          .0808
    .862                                                                           -.1576
    .865     .1474
    .870                .0262
    .900    -.0242                        -.0521                         -.0303
    .905                        -.0522
    .919              -.0823
    .940                                  -.1174    -.0592    -.0796
    .943                        -.1453
    .945              -.1350
    .965    -.1533
   1.000                        -.1616              -.1619               -.2915
ALPHA ( 3) =     3.934    BETA  ( 1) =    -3.873   MACH    =  1.2469     Q      =  599.77     P      =  551.10     RN/L   =  3.0099

 SECTION ( 1)LEFT WING BOT SURF               DEPENDENT VARIABLE CP

2Y/BW        .2990     .3640     .4270     .5340     .6730     .7800     .8870     .9720

  X/CW
    .010     .0366    -.0423     .4255     .2354     .1274     .1377     .1646
    .020     .0000    -.0014     .3972     .1283     .1130     .0535    -.0039     .0746
    .040               .0225     .2143
    .050     .0395                         .0462     .0016     .0317     .0172
    .069                                                                           .0348
    .080                                   .0489
```

AMES 11-073(OA148) -140A/B/C/R ORB LEFT WING BOT (XEBL39)

ALPHA (3) = 3.934 BETA (1) = -3.873

SECTION (1)LEFT WING BOT SURF DEPENDENT VARIABLE CP

2Y/BW	.2990	.3640	.4270	.5340	.6730	.7800	.8870	.9720
X/CW								
.081			.1303					
.086		.0967						
.094	.0161							
.150				.0368	.0519	.0739	.0796	
.157								-.0811
.163		.2066						
.177			.0768					
.229	-.0023							
.246		.0752						
.250				.0719	.0639	.0767	.0424	
.274			.0750					
.345								.0146
.390		.0724						
.400				.0766	.0938		.0495	
.402			.0641					
.503								-.0328
.550				.0692	.0793			
.565			-.4752					
.600							-.0075	
.637		.0695						
.650						.0003		
.670								.1728
.700					-.0478			
.725				-.0343				
.750						.4160	.3470	
.760			-.0580					
.775				.3799	.2912			
.798		-.0596						
.808			.3526					
.834	-.0766							
.839		.2846						
.850				.1842	.1416	.1333		
.857			.1838					
[illegible]								-.0669
[illegible]	.3192							
[illegible]		.1302						
.900	.0731			.0493			.0299	
[illegible]			.0317					
[illegible]		-.0079						
[illegible]				-.0388	.0121	-.0263		
[illegible]			-.0575					
[illegible]		[illegible]						
[illegible]	-.1054							
1.000			-.0835		-.1496		-.4352	

DATE 10 FEB 76 TABULATED PRESSURE DATA - OA148 (AMES 11-073-1)

AMES 11-073(OA148) -140A/B/C/R ORB LEFT WING BOT (XE8L39)

ALPHA (3) = 3.935 BETA (2) = .189 MACH = 1.2469 Q = 599.77 P = 551.10 RN/L = 3.0099

SECTION (1)LEFT WING BOT SURF DEPENDENT VARIABLE CP

2Y/BW	.2990	.3640	.4270	.5340	.6730	.7800	.8870	.9720
X/CW								
.010	-.0953	-.2208	.3649	.2860	.1605	.1536	.1810	
.020	000	-.1029	.3668	.1792	.1373	.0866	.0447	.0265
.040		-.0679	.2506					
.050	-.0230			.1121	.0398	.0658	.0544	
.069								.0061
.080				.0946				
.081			.1541					
.085		.0625						
.094	-.0207							
.150				.0634	.0925	.0892	.0807	
.157								-.0947
.163		.2020						
.177			.0871					
.223	-.0209							
.246		.0835						
.250				.0909	.0783	.0816	.0416	
.274			.1006					
.345								.0000
.390		.0914						
.400				.0952	.1138		.0681	
.402			.0878					
.503								-.0505
.550				.0861	.0916			
.565			-.5271					
.600							-.0142	
.637		.0930						
.650						.0052		
.670								.1679
.700					-.0443			
.725				-.0252				
.750						.3953	.3388	
.750			-.0579					
.775				.3797	.2927			
.738		-.0470						
.808			.3483					
.834	-.0708							
.839		.2605						
.850				.1766	.1396	.1457		
.857			.1723					
.862								-.0867
.865	.2687							
.879		.1197						
.900	.0542			.0397			.0286	
.935			.0213					
.913		-.0135						

```
                                      AMES 11-073(OA148) -140A/B/C/R ORB LEFT WING BOT              (XEBL39)
ALPHA ( 3) =    3.935    BETA  ( 2) =      .189

 SECTION ( 1)LEFT WING BOT SURF                DEPENDENT VARIABLE CP

2Y/BW        .2990   .3640   .4270   .5340   .6730   .7800   .8870   .9720

  X/CW
   .950                              -.0503   .0234  -.0189
   .953                      -.0686
   .955              -.0851
   .965     -.1041
  1.000                      -.1003           -.1517          -.4191
ALPHA ( 3) =    3.939    BETA  ( 3) =     4.242   MACH  =  1.2469     Q     =  599.77     P     =  551.10     RN/L  =  3.0099
 SECTION ( 1)LEFT WING BOT SURF                DEPENDENT VARIABLE CP

2Y/BW        .2990   .3640   .4270   .5340   .6730   .7800   .8870   .9720

  X/CW
   .010     -.2445  -.3630   .2751   .3424   .2084   .2265   .2377
   .020      .0000  -.2175   .3111   .2384   .1775   .1657   .1174  -.0402
   .040             -.1683   .2600
   .050     -.0934                   .1678   .0902   .1181   .1198
   .069                                                             -.0321
   .080                              .1309
   .081                      .1751
   .086              .0087
   .094     -.0732
   .150                              .0994   .1205   .1146   .1068
   .157                                                             -.1055
   .163              .1731
   .177                      .1136
   .229     -.0593
   .246              .1001
   .250                              .1105   .0988   .1066   .0722
   .274                      .1197
   .345                                                             -.0388
   .390              .1131
   .400                              .1219   .1452           .0924
   .402                      .1103
   .503                                                             -.0857
   .550                              .0969   .1006
   .555                     -.4550
   .600                                                     -.0210
   .637              .0930
   .650                                              .0057
   .670                                                              .1439
   .700                                     -.0438
   .725                             -.0239
   .750                                              .3880   .3207
   .760                     -.0501
```

AMES 11-073(OA148) -140A/B/C/R ORB LEFT WING BOT (XEBL39)

ALPHA (3) = 3.939 BETA (3) = 4.242

SECTION (1)LEFT WING BOT SURF DEPENDENT VARIABLE CP

2Y/BW	.2990	.3640	.4270	.5340	.6730	.7800	.8870	.9720
X/CW								
.775				.4030	.2802			
.798		-.0091						
.808			.3213					
.834	-.0569							
.833		.2235						
.850				.1632	.1314	.1492		
.857			.1554					
.862								-.1040
.865	.2410							
.879		.1107						
.900	.0645			.0249			.0211	
.905			.0168					
.919		-.0084						
.950				-.0649	.0083	-.0229		
.953			-.0733					
.955		-.0753						
.945	-.0890							
1.000			-.1563		-.1637		-.3910	

ALPHA (4) = 7.936 BETA (1) = -3.863 MACH = 1.2467 Q = 599.84 P = 551.34 RN/L = 3.0131

SECTION (1)LEFT WING BOT SURF DEPENDENT VARIABLE CP

2Y/BW	.2990	.3640	.4270	.5340	.6730	.7800	.8870	.9720
X/CW								
.010	-.0320	-.2348	.3991	.5413	.4814	.5593	.5752	
.020	.0000	-.0598	.4516	.4138	.4262	.4388	.4579	.0854
.040		-.0151	.3708					
.050	.0591			.3108	.3160	.3440	.3829	
.069								.1239
.080				.2548				
.091			.2734					
.086		.1273						
.094	.0675							
.152				.2146	.2748	.2991	.2904	
.157								-.0326
133		.2879						
.177			.2056					
229	.0563							
.246		.1743						
.253				.2203	.2342	.2722	.2367	
.274			.2013					
.345								.0850
.390		.1852						

```
DATE 10 FEB 76              TABULATED PRESSURE DATA - OA148 ( AMES 11-073-1 )
                                     AMES 11-C' 3(OA148) -140A/B/C/R ORB LEFT WING BOT                (XEBL39)

ALPHA ( 4) =    7.936    BETA  ( 1) =    -3.863

  SECTION ( 1)LEFT WING BOT SURF                    DEPENDENT VARIABLE CP

2Y/BW         .2930    .3640    .4270    .5340    .6730    .7800    .8870    .9720

   X/CW
     .400                                .2179    .2871             .2225
     .402                       .2001
     .503                                                                    .0371
     .550                                .1994    .1871
     .565                      -.5137
     .600                                                           .0733
     .637              .1710
     .650                                                  .0906
     .670                                                                    .2636
     .700                                         .0293
     .725                                .0506
     .750                                                  .5386    .4330
     .760                       .0210
     .775                                .5580    .4312
     .799              .0327
     .808                       .4790
     .834     .0156
     .839              .3840
     .850                                .2614    .2129    .2168
     .857                       .2519
     .862                                                                   -.0013
     .865     .4238
     .879              .1986
     .890     .1479                      .1046                      .0351
     .905                       .0683
     .919              .0564
     .950                                .0114    .0651    .0469
     .953                      -.0062
     .965             -.0347
     .985    -.0513
    1.000                      -.1230             -.2485            -.5511
ALPHA ( 4) =    7.897    BETA  ( 2) =     .182   MACH   =  1.2467    Q     =  599.84    P     =  551.34    RN/L   =  3.0131

  SECTION ( 1)LEFT WING BOT SURF                    DEPENDENT VARIABLE CP

2Y/BW         .2990    .3640    .4270    .5340    .6730    .7800    .8870    .9720

   X/CW
     .010    -.2149   -.4612    .2262    .5460    .4961    .5535    .5572
     .020     .0000   -.2003    .3390    .4407    .4448    .4500    .4647   -.0406
     .040             -.1412    .3291
     .050    -.0191                      .3462    .3395    .3497    .3871
     .068                                                                    .0231
     .080                                .2848
```

AMES 11-073(OA148) -140A/B/C/R ORB LEFT WING BOT (XEBL39)

ALPHA (4) = 7.897 BETA (2) = .182

SECTION (1)LEFT WING BOT SURF DEPENDENT VARIABLE CP

2Y/BW	.2990	.3640	.4270	.5340	.6730	.7800	.8870	.9720
X/CW								
.081			.2525					
.086		.0382						
.094	.0075							
.150				.2432	.2809	.3068	.2968	
.157								-.0664
.163		.2394						
.177			.2132					
.229	.0280							
.246		.1550						
.250				.2275	.2503	.2837	.2329	
.274			.2220					
.345								.0358
.390		.1994						
.400				.2403	.2922		.2127	
.402			.2151					
.503								.0049
.550				.2079	.1987			
.565			-.5503					
.600							.0581	
.637		.1921						
.650						.0906		
.670								.2355
.700					.0373			
.725				.0596				
.750						.5267	.4194	
.760			.0389					
.775				.5638	.4179			
.798		.0825						
.808			.4632					
.834	.0325							
.839		.3522						
.850				.2519	.2115	.2202		
.857			.2428					
.862								-.0258
.865	.3804							
.879		.1999						
.910	.1595			.0936			.0875	
.905			.0905					
.919		.0609						
.950				.0011	.0489	.0475		
.953			-.0049					
.955		-.0236						
.965	-.0313							
1.000			-.1737		-.1308		-.5485	

REPRODUCIBILITY OF THE
ORIGINAL PAGE IS POOR

CATE 10 FEB 76 TABULATED PRESSURE DATA - OA148 (AMES 11-073-1)

AMES 11-073(OA148) -140A/B/C/R ORB LEFT WING BOT (XEBL39)

ALPHA (4) = 7.878 BETA (3) = 4.243 MACH = 1.2467 Q = 599.84 P = 551.34 RN/L = 3.0131

SECTION (1)LEFT WING BOT SURF DEPENDENT VARIABLE CP

2Y/BW	.2990	.3640	.4270	.5340	.6730	.7800	.8870	.9720
X/CW								
.010	-.3931	-.5251	.0695	.5116	.4758	.5246	.5287	
.020	.0000	-.3053	.2073	.4289	.4335	.4504	.4621	-.1918
.040		-.2410	.2610					
.050	-.1038			.3481	.3418	.3543	.3923	
.069								-.0874
.090				.2848				
.091			.2065					
.085		-.0356						
.094	-.0567							
.150				.2467	.2879	.3181	.3009	
.157								-.1042
.163		.1776						
.177			.2084					
.229	-.0146							
.246		.1312						
.250				.2367	.2735	.2968	.2311	
.274			.2260					
.345								-.0117
.390		.1965						
.400				.2471	.2827		.2032	
.492			.2260					
.503								-.0433
.550				.2023	.1966			
.595			-.5039					
.600							.0399	
.637		.1903						
[illegible]						.0784		
[illegible]								.2090
.700					.0380			
.725				.0652				
[illegible]						.5128	.4190	
[illegible]			.0807					
.775				.5380	.3987			
[illegible]		.1305						
[illegible]			.4150					
[illegible]	.0379							
[illegible]		.3171						
[illegible]				.2347	.1942	.2173		
[illegible]			.2262					
.872								-.0528
[illegible]	.3497							
[illegible]		.1918						
[illegible]	.1540			.0906			.0794	
.905			.0873					
.919		.0506						

```
DATE 10 FEB 76              TABULATED PRESSURE DATA - OA148 ( AMES 11-073-1 )

                                  AMES 11-073(OA148) -140A/B/C/R ORB LEFT WING BOT          (XEBL39)

ALPHA ( 4) =     7.878    BETA  ( 3) =     4.243

 SECTION ( 1)LEFT WING BOT SURF              DEPENDENT VARIABLE CP

2Y/BW         .2990     .3640     .4270     .5340     .6730     .7800     .8670     .9720

  X/CW
   .950                                    -.0089     .0598     .0441
   .953                          -.0057
   .955                -.0134
   .965      -.0146
  1.000                          -.1265               -.1571               -.5586
ALPHA ( 5) =    11.869    BETA  ( 1) =    -3.849   MACH    =  1.2475     Q       =  600.06     P       =  550.87     RN/L    =  3.0127

 SECTION ( 1)LEFT WING BOT SURF              DEPENDENT VARIABLE CP

2Y/BW         .2990     .3640     .4270     .5340     .6730     .7800     .8870     .9720

  X/CW
   .010      -.1712    -.4004     .3005     .6964     .6932     .7431     .7306
   .020       .0000    -.1051     .4482     .6055     .6440     .6738     .6736    -.0330
   .040                -.0350     .4671
   .050       .0772                         .4976     .5395     .5729     .5885
   .069                                                                            .0775
   .090                                     .4381
   .091                           .4049
   .096                 .1571
   .134       .1066
   .150                                     .3967     .4594     .4946     .4497
   .157                                                                           -.0252
   .163                 .3783
   .177                           .3444
   .229       .1284
   .246                 .2953
   .250                                     .3776     .4244     .4400     .3771
   .274                           .3406
   .345                                                                            .1433
   .390                 .3219
   .400                                     .3747     .4001               .3272
   .402                           .3645
   .503                                                                            .1122
   .550                                     .3028     .2984
   .565                          -.5392
   .600                                                                  .1510
   .647                 .2912
   .650                                                        .1678
   .670                                                                            .3215
   .700                                               .1347
   .725                                     .1846
   .750                                                        .6485     .5081
   .760                           .2147
```

AMES 11-073(OA148) -140A/B/C/R ORB LEFT WING BOT (XE6L39)

ALPHA (5) = 11.869 BETA (1) = -3.849

SECTION (1) LEFT WING BOT SURF DEPENDENT VARIABLE CP

2Y/BW	.2990	.3640	.4270	.5340	.6730	.7800	.8870	.9720
X/CW								
.775				.6786	.5302			
.798		.2509						
.808			.5593					
.844	.1262							
.853		.4530						
.860				.3158	.2707	.2851		
.867			.3068					
.880								.0590
.885	.5227							
.879		.2594						
.900	.2193			.1576			.1555	
.925			.1437					
.919		.1161						
.950				.0595	.1160	.1103		
[illegible]			.0518					
[illegible]		.0162						
.955	.0005							
1.000			-.0283		-.3052		-.6424	

ALPHA (5) = 11.810 BETA (2) = .187 MACH = 1.2475 Q = 600.06 P = 550.87 RN/L = 3.0127

SECTION (1)LEFT WING BOT SURF DEPENDENT VARIABLE CP

2Y/BW	.2990	.3640	.4270	.5340	.6730	.7800	.8870	.9720
X/CW								
.010	-.3422	-.4871	.1098	.6238	.6413	.6640	[illegible]	
.020	.0000	-.2153	.2862	.5578	.6076	.6353	.6266	-.1923
.040		-.1453	.3723					
[illegible]	-.0128			.4877	.5298	.5534	.5620	
[illegible]								-.0352
.080				4320				
[illegible]			.3399					
[illegible]		.0746						
[illegible]	[illegible]							
[illegible]				.3323	.4590	.4803	.4313	
[illegible]								-.0655
[illegible]		.3155						
[illegible]			.3293					
[illegible]	0985							
[illegible]		.2332						
[illegible]				.3778	.4150	.4292	.3603	
[illegible]			.3382					
[illegible]								.0861
[illegible]		3235						

```
                                   AMES 11-073(OA148) -140A/B/C/R ORB LEFT WING BOT             (XEB_39)

ALPHA ( 5) =   11.810     BETA  ( 2) =      .187

 SECTION ( 1)LEFT WING BOT SURF                DEPENDENT VARIABLE CP

2Y/BW         .2930   .3540   .4270   .5340   .6730   .7800   .8870   .9720

  X/CW
    .400                              .3693   .3908           .3057
    .402                      .3676
    .503                                                              .0757
    .550                              .2982   .2868
    .565                     -.5831
    .600                                                      .1240
    .637              .2862
    .650                                              .1528
    .670                                                              .2787
    [illegible]                                .1910
    [illegible]                       .2095
    .750                                              .6202   .4909
    .760                      .2239
    .775                              .6636   .5016
    .799              .2570
    .808                      .5345
    [illegible]  .1291
    [illegible]       .4207
    .850                              .3020   .2578   .2768
    .857                      .3002
    .862                                                              .0154
    .865      .4799
    .879              .2675
    .900      .2317                   .1517                   .1398
    .905                      .1483
    .919              .1225
    .950                              .0501   .0998   .1055
    .953                      .0516
    .955              .0321
    .965      .0259
   1.000                     -.1319           -.1963          -.6025

ALPHA ( 5) =   11.866     BETA  ( 3) =    4.252   MACH   =  1.2475     Q      =  600.06     P      =  550.87     RN/L   =  3.  27

 SECTION ( 1)LEFT WING BOT SURF                DEPENDENT VARIABLE CP

2Y/BW         .2990   .3540   .4270   .5340   .6730   .7800   .8870   .9720

  X/CW
    .010     -.4621  -.5412  -.0973   .5221   .5601   .5663   .5401
    .030      .0000  -.3346   .1278   .5077   .5625   .5853   .5594  -.3183
    .040             -.2493   .2852
    .050     -.0971                   .4517   .5149   .5276   .5201
    [illegible]                                                      -.1420
    .043                              .4061
```

```
                         AMES 11-073(OA148) -140A/B/C/R ORB LEFT WING BOT                (XEBL39)

ALPHA ( 5) =  11.866    BETA  ( 3) =     4.252

SECTION ( 1)LEFT WING BOT SURF              DEPENDENT VARIABLE CP

Y/BW        .2390   .3640   .4270   .5340   .6730   .7800   .8870   .9720

 X/CW
  .081                      .2580
  .086             -.0118
  .094     -.0272
  .150                              .3747   .4462   .4683   .4095
  .157                                                              -.1174
  .183              .2393
  [illegible]               .3013
  .233      .0361
  .246              .1904
  .250                              .3744   .4041   .4155   .3450
  .274                      .3419
  .345                                                               .0282
  .390              .3073
  .400                              .3538   .3757           .2827
  .402                      .3551
  .513                                                               .1330
  .550                              .2838   .2768
  .565                     -.5272
  .600                                                      .1426
  .637              .2756
  .650                                              .1587
  .675                                                               .2459
  .700                                      .2503
  .725                              .2452
  .750                                              .5822   .4628
  .760                      .2540
  .775                              .6188   .4686
  .798              .2518
  .840                      .4839
  [illegible] .1173
  [illegible]       .3375
  [illegible]                       .2862   .2373   .2635
  [illegible]               .2866
  [illegible]                                                       -.0148
  [illegible] .4504
  [illegible]       .2622
  .900      .2334                   .1422                   .1280
  [illegible]               .1448
  [illegible]       .12[illegible]
  [illegible]                       .0425   .1081   .0946
  [illegible]               .0524
  [illegible]       .0486
  .975      .0484
  [illegible]              -.2187          -.1304          -.5684
```

```
DATE 10 FEB 76          TABULATED PRESSURE DATA - OA148 ( AMES 11-073-1 )                                        PAGE 2148

                                   AMES 11-073(OA148) -140A/B/C/R ORB LEFT WING BOT                (XEBL40)   ( 05 AUG 75  )

              PEFERENCE DATA                                                                             PARAMETRIC DATA

SREF  =  2690.0000 SQ.FT.   XMRP  =  1076.6800 IN. XO                           RUDDER =     10.000   SPDBRK =     85.000
LREF  =   474.8000 IN.      YMRP  =      .0000 IN. YO                           BDFLAP =     16.300   L-ELVN =     10.000
BREF  =   936.0680 IN.      ZMRP  =   375.0000 IN. ZO                           R-ELVN =     10.000   MACH   =     1.100
SCALE =      .0300

ALPHA ( 1) =   -3.999   BETA  ( 1) =   -3.842   MACH   =  1.1017    Q      =  601.11   P      =  707.47   RN/L   =  3.1883

 SECTION ( 1)LEFT WING BOT SURF            DEPENDENT VARIABLE CP

2Y/BW       .2990   .3640   .4270   .5340   .6730   .7800   .8870   .9720

  X/CW
    .010   -.1790  -.3286  -.2766  -.6125  -.7336  -.5542  -.5461
    .020    .0000  -.3090  -.3756  -.7699  -.7745  -.7965  -.8012  -.8333
    .040           -.2918  -.4001
    .050   -.1797                  -.7228  -.7948  -.8304  -.8271
    .069                                                           -.9211
    .080                           -.6990
    .081                   -.2928
    .086           -.1425
    .094   -.1844
    .150                           -.4748  -.6901  -.7280  -.7592
    .157                                                           -.5109
    .163           -.0704
    .177                   -.2438
    .229   -.1521
    .246           -.1382
    .250                           -.2737  -.5678  -.6669  -.6957
    .274                   -.2068
    .345                                                           -.8377
    .390           -.1625
    .400                           -.1559  -.1694          -.6143
    .402                   -.1257
    .503                                                           -.7683
    .550                           -.1238  -.1505
    .565                   -.4472
    .600                                                   -.2581
    .637           -.1059
    .650                                           -.1793
    .670                                                           -.5149
    .700                                   -.2130
    .725                           -.2442
    .750                                            .3169   .2165
    .760                   -.2212
    .775                            .1628   .1222
    .798           -.1743
    .808                    .1444
    [illegible]   -.2383
    .839            .0744
    .850                            .0105  -.0041  -.0143
```

TABULATED PRESSURE DATA - OA148 (AMES 11-073-1)

AMES 11-073(OA148) -140A/B/C/R ORB LEFT WING BOT (XEBL40)

ALPHA (1) = -3.999 BETA (1) = -3.842

SECTION (1)LEFT WING BOT SURF DEPENDENT VARIABLE CP

2Y/BW	.2990	.3640	.4270	.5340	.6730	.7800	.8870	.9720
X/CW								
.857			-.0159					
.862								-.3255
.865	.1106							
.879		-.0549						
.903	-.1213			-.1238			-.1132	
.905			-.1505					
.919		-.1995						
.950				-.2142	-.1528	-.1948		
.953			-.2450					
.955		-.2463						
.965	-.2760							
1.000			.0054		-.0499		-.0332	

ALPHA (1) = -3.997 BETA (2) = .194 MACH = 1.1017 Q = 601.11 P = 707.47 RN/L = 3.1883

SECTION (1)LEFT WING BOT SURF DEPENDENT VARIABLE CP

2Y/BW	.2990	.3640	.4270	.5340	.6730	.7800	.8870	.9720
X/CW								
.010	-.1353	-.1646	-.1101	-.6078	-.7601	-.5968	-.6087	
.020	.0000	-.1686	-.1358	-.7634	-.8006	-.8276	-.8450	-.8982
.040		-.1528	-.2533					
.050	-.1344			-.6763	-.8110	-.8582	-.8710	
.069								-.8583
.080				-.6287				
.081			-.1821					
.086		-.0599						
.094	-.1323							
.150				-.2677	-.6819	-.7542	-.7863	
.157								-.5025
.163		.0236						
.177			-.1790					
.229	-.1042							
.246		-.0921						
.250				-.1795	-.2316	-.6130	-.7231	
.274			-.1259					
.345								-.7690
.390		-.1031						
.400				-.1166	-.1191		-.4013	
.422			-.1068					
.503								-.5902
.550				-.1290	-.1436			
.565			-.5371					
.600							-.1353	

```
                                 AMES 11-073(OA148) -140A/B/C/R ORB LEFT WING BOT                (XE8L40)

ALPHA ( 1) =    -3.997    BETA  ( 2) =      .194

 SECTION ( 1)LEFT WING BOT SURF           DEPENDENT VARIABLE CP

2Y/BW        .2990    .3640    .4270    .5340    .6730    .7800    .8870    .9720

  X/CW
    .637             -.1144
    .650                                                   -.1851
    .670                                                                     -.3788
    .700                                          -.2264
    .725                               -.2460
    .750                                                    .2639    .1955
    .760                      -.2326
    .775                                .1543    .1079
    .798             -.1783
    .808                       .1359
    .834    -.2217
    .839              .0710
    .850                                .0004   -.0150   -.0280
    .857                      -.0197
    .862                                                                     -.1552
    .865     .0959
    .879             -.0679
    .900    -.1309                     -.1306                     -.1490
    .905                      -.1618
    .919             -.2021
    .950                               -.2220   -.1608   -.1943
    .953                      -.2538
    .955             -.2582
    .965    -.2856
   1.000                      -.1002            -.1745            -.0818
ALPHA ( 1) =    -3.996    BETA  ( 3) =     4.277   MACH    =  1.1017     Q      =  601.11     P      =  707.47     RN/L   =  3.1983

 SECTION ( 1)LEFT WING BOT SURF           DEPENDENT VARIABLE CP

2Y/BW        .2990    .3640    .4270    .5340    .6730    .7800    .8870    .9720

  X/CW
    .010    -.1205   -.0593    .0494   -.5816   -.7722   -.6314   -.6513
    .020     .0000   -.0551    .0170   -.7042   -.8041   -.8530   -.8713   -.8363
    .040             -.0319   -.0963
    .050    -.1030                     -.5772   -.7426   -.8425   -.8820
    .060                                                                     -.8112
    .080                               -.2897
    .081                      -.0757
    .086              .0538
    .100    -.1014
    .150                               -.2160   -.3028   -.6629   -.7920
    .157                                                                     -.4367
    .163              .1134
```

AMES 11-073(OA148) -140A/B/C/R ORB LEFT WING BOT (XEBL40)

ALPHA (1) = -3.996 BETA (3) = 4.277

SECTION (1)LEFT WING BOT SURF DEPENDENT VARIABLE CP

2Y/BW	.2990	.3640	.4270	.5340	.6730	.7800	.8870	.9720
X/CW								
.177			-.1041					
.229	-.0669							
.246		.0056						
.250				-.1325	-.1948	-.2606	-.5238	
.274			-.0679					
.345								-.583
.390		-.0324						
.400				-.1051	-.1176		-.1811	
.402			-.0800					
.503								-.3431
.550				-.1283	-.1517			
.565			-.4313					
.600							-.1894	
.637		-.1082						
.650						-.2114		
.670								-.0860
.700					-.2566			
.725				.2519				
.750						.2075	.1287	
.760			-.2262					
.775				.1359	.0611			
.798		-.1645						
.808			.1112					
.834	-.2247							
.849		.0172						
.850				-.0394	-.0430	-.0356		
.857			-.0516					
.862								-.1901
.865	.0609							
.879		-.0351						
.900	-.1491			-.1669			-.1693	
.905			-.1718					
.919		-.2186						
.950				-.2339	-.1707	-.2050		
.953			-.2525					
.955		-.2593						
.965	-.2762							
1.000			-.1393		-.2959		-.1219	

AMES 11-073(OA148) -140A/B/C/R ORB LEFT WING BOT (XEBL40)

ALPHA (2) = .015 BETA (1) = -3.867 MACH = 1.1001 Q = 600.08 P = 708.37 RN/L = 3.1860

SECTION (1)LEFT WING BOT SURF DEPENDENT VARIABLE CP

2Y/BW	.2990	.3640	.4270	.5340	.6730	.7800	.8870	.9720
X/CW								
.010	-.0475	-.0070	.2103	-.3364	-.4748	-.3944	-.3162	
.020	.0000	-.0405	.1233	-.4684	-.5550	-.5638	-.5950	-.4526
.040		-.0294	-.0683					
.050	-.0909			-.3194	-.4639	-.5642	-.6009	
.069								T.4500
.080				-.2632				
.081			-.0731					
.085		.0214						
.094	-.1095							
.150				-.1825	-.2138	-.3619	-.4630	
.157								-.2275
.163		.0885						
.177			-.0906					
.229	-.0790							
.245		-.0363						
.250				-.0652	-.0871	-.0942	-.0772	
.274			-.0496					
.345								-.0773
.390		-.0159						
.400				.0012	.0244		.0033	
.402			.0097					
.503								-.1629
.550				-.0087	-.0412			
.565			-.5093					
.600							-.1143	
.637		-.0044						
.650						-.1092		
.670								.0487
.700					-.1425			
.725				-.1333				
.750						.3746	.2556	
.760			-.1324					
.775				.3497	.2578			
.798		-.1000						
.803			.2872					
.834	-.1552							
.839		.2021						
.850				.0844	.0485	.0281		
.857			.0760					
.862								-.1688
.865	.2503							
.879		.0218						
.900	-.0211			-.0717			-.1141	
.905			-.0958					
.919		-.1178						

```
                          AMES 11-073(OA148) -140A/B/C/R ORB LEFT WING BOT             (XEBL40)

ALPHA ( 2) =      .015    BETA  ( 1) =    -3.867

 SECTION ( 1)LEFT WING BOT SURF             DEPENDENT VARIABLE CP

2Y/BW        .2990    .3640    .4270    .5340    .6730    .7800    .8870    .9720

  X/CW
    .950                                -.1686   -.1122   -.1657
    .953                       -.1871
    .955              -.1883
    .965     -.2294
   1.000                        .0242             .0021            -.2292

ALPHA ( 2) =      .018    BETA  ( 2) =      .181   MACH   =  1.1001     Q     =  600.08     P     =  708.37     RN/L   =  3.1860

 SECTION ( 1)LEFT WING BOT SURF             DEPENDENT VARIABLE CP

2Y/BW        .2990    .3640    .4270    .5340    .6730    .7800    .8870    .9720

  X/CW
    .010     - 1001   -.0077    .2782   -.2760   -.4647   -.4197   -.3372
    .020      .0000   -.0171    .2133   -.2640   -.4100   -.5467   -.6102   -.2216
    .040               .0030    .0579
    .050     -.1064                     -.2444   -.3594   -.4604   -.4933
    .069                                                                    -.2221
    .080                                -.1668
    .081                        .0009
    .086               .0655
    .094     -.1098
    .150                                -.1197   -.0929   -.0669   -.1331
    .157                                                                    -.1532
    .163               .1564
    .177                       -.0346
    .229     -.0680
    .245               .0193
    .250                                -.0322   -.0630   -.0695   -.1166
    .274                        .0021
    .345                                                                    -.0987
    .390               .0188
    .400                                 .0088    .0385            -.0198
    .402                        .0064
    .503                                                                    -.1748
    .550                                -.0032   -.0361
    .565                       -.6106
    .600                                                           -.1383
    .637              -.0105
    .657                                                  -.1279
    .670                                                                     .0542
    .700                                         -.1525
    .725                                -.1530
    .747                                                   .3391    .2394
    .753                       -.1188
```

AMES 11-073(OA148) -140A/B/C/R ORB LEFT WING BOT (XEBL40)

ALPHA (2) = .018 BETA (2) = .181

SECTION (1)LEFT WING BOT SURF DEPENDENT VARIABLE CP

2Y/BW	.2990	.3640	.4270	.5340	.6730	.7800	.8870	.9720
X/CW								
.775				.3324	.2226			
.799		-.0791						
.808			.2838					
.834	-.1311							
.839		.1858						
.850				.0718	.0420	.0274		
.857			.0641					
.862								-.2164
.865	.2115							
.879		.0146						
.900	-.0318			-.0848			-.1206	
.905			-.0996					
.919		-.1396						
.950				-.1785	-.1206	-.1478		
.953			-.1952					
.955		-.1833						
.965	-.2131							
1.000			-.0277		-.0642		-.0631	

ALPHA (2) = .012 BETA (3) = 4.250 MACH = 1.1001 Q = 680.08 P = 708.37 RN/L = 3.1860

SECTION (1)LEFT WING BOT SURF DEPENDENT VARIABLE CP

2Y/BW	.2990	.3640	.4270	.5340	.6730	.7800	.8870	.9720
X/CW								
.010	-.2053	-.0424	.3488	-.0756	-.3155	-.3575	-.2940	
.020	.0000	-.0171	.3010	-.1020	-.2491	-.3515	-.4880	-.1634
.040		.0093	.1642					
.050	-.1489			-.0891	-.2325	-.2676	-.3395	
.069								-.1719
.080				-.0657				
.081			.0911					
.086		.0906						
.094	-.1237							
.150				-.0223	-.0394	-.0792	-.1152	
.157								-.1537
.163		.1974						
.177			.0444					
.229	-.0625							
.246		.0753						
.250				.0059	-.0371	-.0632	-.1078	
.274			.0503					
.345								-.1421
.390		.0651						

REPRODUCIBILITY OF THE
ORIGINAL PAGE IS POOR

```
DATE 10 FEB 76            TABULATED PRESSURE DATA - OA148 ( AMES 11-073-1 )                                 PAGE 2155

                                    AMES 11-073(OA148) -140A/B/C/R ORB LEFT WING BOT               (XEBL40)

ALPHA ( 2) =      .012    BETA  ( 3) =    4.250

 SECTION ( 1)LEFT WING BOT SURF                    DEPENDENT VARIABLE CP

2Y/BW       .2990   .3640   .4270   .5340   .6730   .7800   .8870   .9720

  X/CW
   .400                             .0191   .0251           -.0445
   .402                     .0340
   .503                                                             -.2024
   .550                            -.0257  -.0503
   .565                    -.5163
   .600                                                    -.1679
   .637            -.0171
   .650                                            -.1501
   .670                                                              .0407
   .700                                    -.1780
   .725                            -.1707
   .750                                             .3005   .2173
   .760                    -.1490
   .775                             .3044   .1796
   .798            -.0720
   .808                     .2340
   .824    -.1402
   .833             .1267
   .850                             .0385   .0377   .0382
   .857                     .0264
   .862
   .865     .1543                                                   -.2414
   .879            -.0025
   .900    -.0620                  -.0928                  -.1128
   .905                    -.1310
   .919            -.1351
   .950                            -.1929  -.1291  -.1447
   .953                    -.2207
   .955            -.1915
   .965    -.2227
  1.000                    -.1153          -.1645          -.0873
ALPHA ( 3) =    3.919   BETA  ( 1) =    -3.865  MACH   =  1.1005     Q     =  600.31     P      =  708.14     RN/L  =  3.1848

 SECTION ( 1)LEFT WING BOT SURF                    DEPENDENT VARIABLE CP

2Y/BW       .2990   .3640   .4270   .5340   .6730   .7800   .8870   .9720

  X/CW
   .010    -.0292  -.0593   .4603   .1901   .1041   .1907   .2380
   .020     .0000  -.0027   .4083   .0642   .1086   .0999   .1001   .0748
   .040             .0275   .2371
   .050    -.0215                   .0425   .0480   .0640   .0942
   .060                                                             .0450
   .080                             .0427
```

DATE 10 FEB 76 TABULATED PRESSURE DATA - OA148 (AMES 11-073-1)

AMES 11-073(OA148) -140A/B/C/R ORB LEFT WING BOT (XEBL40)

ALPHA (3) = 3.919 BETA (1) = -3.865

SECTION (1)LEFT WING BOT SURF DEPENDENT VARIABLE CP

2Y/BW	.2990	.3640	.4270	.5340	.6730	.7800	.8870	.9720
X/CW								
081			.1354					
.086		.1250						
.094	-.0434							
.150				.1038	.1236	.1302	.1012	
.157								-.0707
.163		.2327						
.177			.0839					
.229	-.0403							
.246		.0894						
.250				.1400	.1341	.1236	.0617	
.274			.1428					
.345								-.0156
.390		.1538						
.400				.1611	.1624		.0795	
.402			.1834					
.503								-.0834
.550				.0896	.0590			
.565			-.5952					
.600							-.0690	
.637		.0983						
.650						-.0464		
.670								.1569
.700					-.0947			
.725				-.0228				
.750						.4966	.3471	
.760			.0872					
.775				.4929	.3737			
.798		.1204						
.800			.3058					
.814	-.0087							
.839		.2888						
.850				.1299	.0898	.0910		
.857			.1255					
.862								-.1303
.865	.3692							
.879		.0755						
.900	.0343			-.0358			-.0520	
.905			-.0502					
.919		-.0791						
.950				-.1392	-.0678	-.1076		
.953			-.1516					
.955		-.1594						
.965	-.2022							
1.000			.0524		-.0176		-.4785	

AMES 11-073(OA148) -140A/B/C/R ORB LEFT WING BOT (XEBL40)

ALPHA (3) = 3.917 BETA (2) = .178 MACH = 1.1005 Q = 600.31 P = 708.14 RN/L = 3.1848

SECTION (1)LEFT WING BOT SURF DEPENDENT VARIABLE CP

2Y/BW	.2990	.3640	.4270	.5340	.6730	.7800	.8870	.9720
X/CW								
.010	-.1650	-.1959	.4393	.2650	.1676	.2368	.2799	
.020	.0000	-.0842	.4203	.1501	.1392	.1660	.1608	.0057
.040		-.0445	.2831					
.050	-.0827			.1157	.0900	.1203	.1444	
.069								-.0006
.080				.1055				
.081			.1800					
.086		.0988						
.094	-.0855							
.150				.1242	.1562	.1544	.1096	
.157								-.0910
.163		.2585						
.177			.1352					
.229	-.0515							
.245		.1348						
.250				.1383	.1524	.1470	.0713	
.274			.1452					
.345								-.0563
.390		.1702						
.400				.1572	.1693		.0746	
.402			.1634					
.503								-.1134
.550				.0957	.0659			
.565			-.6781					
.600							-.0766	
.637		.0998						
.650						-.0522		
.670								.1382
.700					-.0843			
.725				.0174				
.750						.4612	.3316	
[illegible]			.0799					
.775				.4856	.3599			
.798		.1101						
.819			.3728					
.844	-.0021							
.873		.2567						
[illegible]				.1284	.0834	.0851		
[illegible]			.1199					
[illegible]								-.1572
[illegible]	.3117							
[illegible]		.0808						
[illegible]	.0424			-.0370			-.0574	
[illegible]			-.0464					
.913		-.0733						

```
DATE 10 FEB 76              TABULATED PRESSURE DATA - OA148 ( AMES 11-073-1 )                               PAGE 2158

                                            AMES 11-073(OA148) -140A/B/C/R ORB LEFT WING BOT           (XEBL40)

ALPHA ( 3) =     3.917    BETA  ( 2) =      .178

 SECTION ( 1)LEFT WING BOT SURF              DEPENDENT VARIABLE CP

2Y/BW          .2990     .3640     .4270     .5340     .6730     .7800     .8870     .9720

  X/CW
    .950                                    -.1425    -.0784    -.0972
    .953                          -.1513
    .955                -.1501
    .965      -.1806
   1.000                           .0035               -.0377               -.4900
ALPHA ( 3) =     3.924    BETA  ( 3) =     4.244   MACH    =  1.1005     Q      =  600.31    P      =  708.14    RN/L   =  3.1848

 SECTION ( 1)LEFT WING BOT SURF              DEPENDENT VARIABLE CP

2Y/BW          .2990     .3640     .4270     .5340     .6730     .7800     .8870     .9720

  X/CW
    .010      -.3501    -.3230     .3895     .3677     .2589     .3071     .3094
    .020       .0000    -.1683     .4074     .2601     .2290     .2172     .2077    -.1333
    .040                -.1190     .3360
    .050      -.1707                         .2127     .1609     .1651     .1670
    .069                                                                            -.1014
    .080                                     .1837
    .081                           .2474
    .086                 .0770
    .094      -.1423
    .150                                     .1700     .1682     .1616     .1138
    .157                                                                            -.1326
    .163                 .2803
    .177                           .1994
    .229      -.0748
    .246                 .1925
    .250                                     .1651     .1599     .1523     .0688
    .274                           .1840
    .345                                                                            -.1236
    .390                 .1915
    .400                                     .1526     .1544               .0515
    .402                           .1783
    .503                                                                            -.1575
    .550                                     .0855     .0555
    .565                          -.5634
    .600                                                                  -.1016
    .637                 .0855
    .650                                                        -.0704
    .670                                                                             .1066
    .700                                              -.0843
    .725                                    -.0078
    .750                                                         .4319     .3041
    .760                           .0627
```

ALPHA (3) = 3.924 BETA (3) = 4.244

SECTION (1)LEFT WING BOT SURF DEPENDENT VARIABLE CP

2Y/BW	.2990	.3640	.4270	.5340	.6730	.7800	.8870	.9720
X/CW								
.775				.4614	.3173			
.798		.0838						
.808			.3249					
.834	-.0235							
.839		.2216						
.850				.1009	.0645	.0684		
.857			.0957					
.862								-.1882
.865	.2695							
.873		.0669						
.900	.0294			-.0585			-.0760	
.905			-.0588					
.919		-.0859						
.950				-.1655	-.0959	-.1111		
.953			-.1598					
.955		-.1478						
.965	-.1623							
1.000			-.0870		-.1054		-.3790	

ALPHA (4) = 7.901 BETA (1) = -3.860 MACH = 1.1015 Q = 600.67 P = 707.22 RN/L = 3.1834

SECTION (1)LEFT WING BOT SURF DEPENDENT VARIABLE CP

2Y/BW	.2990	.3640	.4270	.5340	.6730	.7800	.8870	.9720
X/CW								
.010	-.1178	-.3808	.4693	.6054	.5652	.6345	.6036	
.020	.0000	-.1463	.5307	.4897	.5124	.5135	.5030	-.0220
.040		-.3303	.4711					
.050	.0097			.3317	.4065	.4142	.4084	
.059								.0388
.080				.3431				
.081			.3729					
.086		.0999						
.094	.0144							
.150				.3172	.3382	.3463	.2846	
.157								-.0596
.163		.3668						
.177			.3119					
.229	.0125							
.246		.2769						
.250				.3124	.2987	.2924	.2242	
.274			.3027					
.345								.0579
.390		.2913						

```
                          AMES 11-073(OA148) -140A/B/C/R ORB LEFT WING BOT             (XEBL40)

ALPHA ( 4) =    7.901   BETA  ( 1) =   -3.860

 SECTION ( 1)LEFT WING BOT SURF              DEPENDENT VARIABLE CP

2Y/BW        .2990   .3640   .4270   .5340   .6730   .7800   .8870   .9720

  X/CW
    .400                                .2701   .2687           .1810
    .402                        .2916
    .503                                                                .1134
    .550                                .1736   .1597
    .565                       -.6284
    .600                                                        .1668
    .637                .1766
    .650                                                .2051
    .670                                                                .1908
    .700                                        .2384
    .725                                .2576
    .750                                                .4887   .3692
    .760                        .2552
    .775                                .5631   .4042
    .798                .2626
    .808                        .4350
    .834        .1724
    .839                .3320
    .850                                .1632   .1145   .1209
    .857                        .1621
    .862                                                               -.0874
    .865        .4406
    .879                .1184
    .900        .0845                   .0031                  -.0125
    .905                       -.0085
    .919               -.0388
    .950                               -.1035  -.0376  -.0572
    .953                       -.1091
    .955               -.1221
    .965       -.1438
   1.000                        .0553          -.1407          -.5860
ALPHA ( 4) =    7.905   BETA  ( 2) =     .181   MACH  =  1.1015    Q     =  600.67    F     =  707.22    RN/L  =  3.1E-4
 SECTION ( 1)LEFT WING BOT SURF              DEPENDENT VARIABLE CP

2Y/BW        .2990   .3640   .4270   .5340   .6730   .7800   .8870   .9720

  X/CW
    .010       -.3311  -.6337   .2977   .6029   .5608   .6034   .5740
    .020        .0000  -.3115   .4281   .5120   .5133   .5100   .4922  -.1605
    .040               -.2346   .4532
    .050       -.0891                   .4211   .4163   .4112   .4040
    .060                                                               -.0683
    .070                                .3699
```

AMES 11-073(OA148) -140A/B/C/R ORB LEFT WING BOT (XEBL40)

ALPHA (4) = 7.905 BETA (2) = .181

SECTION (1)LEFT WING BOT SURF DEPENDENT VARIABLE CP

2Y/BW	.2930	[illegible]	.4270	.5340	.6730	.7800	.8870	.9720
X/CW								
.081			.3776					
.086		.0116						
.094	-.0526							
.150				.3314	.3420	.3484	.2778	
.157								-.0870
.163		.3440						
.177			.3216					
.229	-.0304							
.246		.2711						
.250				.3030	.3006	.2950	.2123	
.274			.3029					
.345								.0204
.390		.2975						
.400				.2671	.2671		.1707	
.402			.2864					
.503								.0942
.550				.1725	.1579			
.555			-.6974					
.600							.1662	
.637		.1763						
.650						.2019		
.670								.1540
.700					.2385			
.715				.2567				
.740						.4892	.3504	
.760			.2588					
.775				.5560	.3907			
.799		.2569						
.809			4286					
[illegible]	.1781							
[illegible]		.3294						
[illegible]				.1640	.1156	.1192		
[illegible]			.1605					
[illegible]								-.1251
[illegible]	.4180							
[illegible]		.1446						
[illegible]	.1183			.0057			-.0158	
[illegible]			.0065					
[illegible]		-.0168						
[illegible]				-.0981	-.0251	-.0518		
[illegible]			-.0958					
[illegible]		-.0366						
[illegible]	-.1059							
[illegible]			.0143		-.0936		-.6550	

AMES 11-073(OA148) -140A/B/C/R ORB LEFT WING BOT (XEBL40)

ALPHA (4) = 7.934 BETA (3) = 4.239 MACH = 1.1015 Q = 600.67 P = 707.22 RN/L = 3.1834

SECTION (1)LEFT WING BOT SURF DEPENDENT VARIABLE CP

2Y/BW	.2990	.3640	.4270	.5340	.6730	.7800	.8870	.9720
X/CW								
.010	-.5513	-.4446	.1754	.5833	.5369	.5430	.5093	
.020	.0000	-.3527	.3497	.5211	.4997	.4904	.4585	-.3451
.040		-.2819	.4261					
.050	-.1929			.4399	.4150	.4039	.3842	
.069								-.2033
.080				.3862				
.081			.3901					
.086		-.0298						
.094	-.1331							
.150				.3360	.3410	.3349	.2590	
.157								-.1394
.163		.3314						
.177			.3405					
.229	-.0721							
.245		.2924						
.250				.2999	.2934	.2787	.1920	
.274			.3071					
.345								-.0516
.393		.3024						
.400				.2521	.2518		.1367	
.402			.2778					
.503								.0701
.550				.1627	.1385			
.565			-.6339					
.600							.1299	
.637		.1626						
.650						.1747		
.670								.1048
.700					.2132			
.725				.2339				
.750						.4573	.3237	
.760			.2336					
.775				.5189	.3592			
.798		.2351						
.808			.3904					
.834	.1430							
.839		.3048						
.850				.1506	.0943	.1046		
.857			.1627					
.862								-.1704
.865	.3888							
.879		.1463						
.900	.1264			-.0033			-.0392	
.905			.0066					
.919		-.0089						

```
DATE 10 FEB 76              TABULATED PRESSURE DATA - OA148 ( AMES 11-073-1 )                                      PAGE 2163

                                       AMES 11-073(OA148) -140A/B/C/R ORB LEFT WING BOT                   (XEBL40)

ALPHA ( 4) =     7.904    BETA  ( 3) =     4.239

 SECTION ( 1)LEFT WING BOT SURF            DEPENDENT VARIABLE CP

2Y/BW       .2990    .3640    .4270    .5340    .6730    .7800    .8870    .9720

  X/CW
    .950                               -.1091   -.0401   -.0606
    .953                      -.0901
    .955             -.0809
    .965    -.0816
   1.000                      -.0797            -.1028            -.6710

ALPHA ( 5) =    11.906    BETA  ( 1) =    -3.844   MACH   =  1.0995     Q      =  600.08     P      =  709.07     RN/L   =  3.1837

 SECTION ( 1)LEFT WING BOT SURF            DEPENDENT VARIABLE CP

2Y/BW       .2990    .3640    .4270    .5340    .6730    .7800    .8870    .9720

  X/CW
    .010   -.2927   -.5752    .2361    .7405    .7349    .7268    .6815
    .020    .0000   -.2128    .4541    .6920    .7018    .7066    .6611   -.1951
    .040            -.1330    .5511
    .050    .0146                      .5988    .6117    .6177    .5869
    .069                                                                 -.0284
    .080                               .5399
    .081                      .5050
    .086             .1749
    .094    .0568
    .150                               .4772    .5084    .5102    .4442
    .157                                                                 -.0568
    .163             .4592
    .177                      .4477
    .229    .0807
    .246             .3910
    .250                               .4313    .4441    .4370    .3693
    .274                      .4208
    .345                                                                  .1369
    .390             .4007
    .400                               .3755    .3850             .3144
    .402                      .3914
    .503                                                                  .1668
    .550                               .2881    .2892
    .565                     -.6894
    .600                                                          .2671
    .637             .2644
    .650                                                 .2950
    .670                                                                  .2072
    .700                                        .3048
    .725                               .3193
    .750                                                 .5197    .3995
    .760                      .3061
```

```
DATE 10 FEB 76            TABULATED PRESSURE DATA - OA148 ( AMES 11-073-1 )
                                AMES 11-073(OA148) -140A/B/C/R ORB LEFT WING BOT              (XE8L40)

ALPHA ( 5) =   11.906    BETA  ( 1) =   -3.844

 SECTION ( 1)LEFT WING BOT SURF           DEPENDENT VARIABLE CP

2Y/BW        .2990   .3640   .4270   .5340   .6730   .7800   .8870   .9720

  X/CW
   .775                              .5942   .4216
   .798              .3163
   .808                      .4591
   .834      .2251
   .839              .3543
   .850                              .1978   .1439   .1634
   .857                      .1961
   .862                                                              -.0547
   .865      .4772
   .879              .1626
   .900      .1282                   .0405                   .0378
   .905                      .0275
   .919              .0014
   .950                             -.0586   .0117  -.0006
   .953                     -.0626
   .955             -.0801
   .965     -.1003
  1.000                     -.0284           -.2502          -.6412
ALPHA ( 5) =   11.808    BETA  ( 2) =     .188   MACH  =  1.0995     Q     =  600.08     P     =  709.07     RN/L   =  3.1637

 SECTION ( 1)LEFT WING BOT SURF           DEPENDENT VARIABLE CP

2Y/BW        .2990   .3640   .4270   .5340   .6730   .7800   .8870   .9720

  X/CW
   .010     -.4890  -.6442   .0023   .6619   .6777   .6384   .5948
   .020      .0000  -.3309   .2827   .6551   .6656   .6519   .6044  -.3376
   .040             -.2445   .4624
   .050     -.0930                   .5949   .6067   .5881   .5505
   .069                                                              -.1348
   .080                              .5479
   .081                      .4837
   .086              .0774
   .094     -.0245
   .150                              .4828   .4942   .5006   .4185
   .157                                                              -.0840
   .163              .3926
   .177                      .4641
   .223      .0376
   .246              .3723
   .250                              .4336   .4343   .4284   .3498
   .274                      .4258
   .345                                                               .0853
   .390              .3983
```

```
                                 AMES 11-073(OA148) -140A/B/C/R ORB LEFT WING BOT             (XE8L40)

ALPHA ( 5) =   11.808    BETA  ( 2) =     .188

 SECTION ( 1)LEFT WING BOT SURF              DEPENDENT VARIABLE CP

2Y/BW        .2990   .3640   .4270   .5340   .6730   .7800   .8870   .9720

  X/CW
    .400                             .3719   .3803           .2943
    .402                     .3882
    .503                                                             .1168
    .550                             .2814   .2878
    .565                    -.7283
    .600                                                     .2478
    .637             .2671
    .650                                             .2817
    .670                                                             .1657
    .700                                     .2979
    .725                             .3156
    .750                                             .4987   .3769
    .760                     .3082
    .775                             .5861   .4055
    .798             .3161
    .808                     .4506
    .834     .2319
    .839             .3554
    .850                             .1978   .1401   .1587
    .857                     .2021
    .862                                                            -.0963
    .865     .4656
    .879             .1799
    .900     .1511                   .0419                   .0336
    .905                     .0389
    .919             .0171
    .950                            -.0571   .0035   .0002
    .953                    -.0549
    .955            -.0617
    .965    -.0642
   1.000                    -.1116          -.1895          -.6533
ALPHA ( 5) =   11.855    BETA  ( 3) =    4.250   MACH   =  1.0995     Q      =  600.08     P      =  709.07     RN/L   =  3.1837

 SECTION ( 1)LEFT WING BOT SURF              DEPENDENT VARIABLE CP

2Y/BW        .2990   .3640   .4270   .5340   .6730   .7800   .8870   .9720

  X/CW
    .010    -.6361  -.6691  -.1653   .5734   .5811   .5219   .4721
    .020     .0000  -.4540   .1243   .6033   .6013   .5785   .5226   .4740
    .040            -.3506   .3789
    .050    -.1983                   .5637   .5644   .5366   .4996
    .063                                                            -.2565
    .080                             .5140
```

AMES 11-073(OA148) -140A/B/C/R ORB LEFT WING BOT (XEBL40)

ALPHA (5) = 11.865 BETA (3) = 4.250

SECTION (1)LEFT WING BOT SURF DEPENDENT VARIABLE CP

2Y/BW	.2930	.3640	.4270	.5340	.6730	.7800	.8870	.9720
X/CW								
.081			.4597					
.086		.0217						
.094	-.1027							
.150				.4516	.4681	.4622	.3762	
.157								-.1406
.163		.3793						
.177			.4464					
.229	-.0182							
.246		.3649						
.250				.4096	.4080	.3969	.3155	
.274			.4096					
.345								.0287
.390		.3939						
.400				.3503	.3553		.2599	
.402			.3666					
.503								.0603
.550				.2659	.2676			
.565			-.6865					
.600							.2131	
.637		.2597						
.650						.2567		
.670								.1153
.700					.2768			
.725				.3005				
.750						.4600	.3396	
.760			.3016					
.775				.5515	.3759			
.798		.3010						
.808			.4275					
.834	.2164							
.839		.3423						
.850				.1826	.1181	.1364		
.857			.1982					
.862								-.1447
.865	.4479							
.879		.1835						
.900	.1621			.0302			.0064	
.905			.0428					
.919		.0269						
.950				-.0696	-.0132	-.0135		
.953			-.0486					
.955		-.0502						
.965	-.0447							
1.000			-.1865		-.1832		-.6610	

REPRODUCIBILITY OF THE
ORIGINAL PAGE IS POOR

DATE 10 FEB 76 TABULATED PRESSURE DATA - OA148 (AMES 11-073-1)

AMES 11-073(OA148) -140A/B/C/R ORB LEFT WING BOT (XEBL41) (05 AUG 75)

REFERENCE DATA

SREF = 2690.0000 SQ.FT. XMRP = 1076.6800 IN. XO
LREF = 474.8000 IN. YMRP = .0000 IN. YO
BREF = 936.0680 IN. ZMRP = 375.0000 IN. ZO
SCALE = .0300

PARAMETRIC DATA

RUDDER = 10.000 SPDBRK = 85.000
BDFLAP = 16.300 L-ELVN = 10.000
R-ELVN = 10.000 MACH = .900

ALPHA (1) = -3.997 BETA (1) = -3.840 MACH = .89993 Q = 599.67 P = 1057.8 RN/L = 3.5780

SECTION (1)LEFT WING BOT SURF DEPENDENT VARIABLE CP

2Y/BW	.2990	.3640	.4270	.5340	.6730	.7800	.8870	.9720
X/CW								
.010	-.1299	-.2814	-.4994	-1.0819	-1.2472	-1.0207	-1.0285	
.020	.0000	-.2479	-.5240	-1.2571	-1.3092	-1.3226	-.9144	-.5540
.040		-.2266	-.6457					
.050	-.1249			-1.1556	-1.3061	-1.3340	-.8867	
.069								-.4767
.080				-1.0553				
.081			-.4726					
.086		-.1094						
.094	-.1158							
.150				- 6147	-1.1325	-1.2297	-.8579	
.157								-.3235
.163		-.1654						
.177			-.4681					
.229	-.0539							
.246		-.3105						
.250				-.3877	-.4220	-.6264	-.7378	
.274			-.3600					
.345								-.3206
.390		-.3209						
.400				-.2001	-.1572		-.4892	
.402			-.2115					
.503								-.2598
.550				-.2093	-.1884			
.565			-.7616					
.600							-.2353	
.637		-.2223						
.650						-.0588		-.1940
.670								
.700					-.0462			
.725				-.0183				
.750						.1582	-.1235	
.760			-.0063					
.775				.1607	.0739			
[illegible]		.0113						
.809			.1111					
[illegible]	-.0721							
[illegible]		.0063						
[illegible]				-.1206	-.1316	-.1014		

```
                         AMES 11-073(OA148) -140A/B/C/R ORB LEFT WING BOT          (XEBL41)

ALPHA ( 1) =   -3.997    BETA  ( 1) =   -3.840

 SECTION ( 1)LEFT WING BOT SURF             DEPENDENT VARIABLE CP

2Y/BW       .2990    .3640    .4270    .5340    .5730    .7800    .8870    .9720

  X/CW
   .857                     -.1337
   .862                                                                  -.1298
   .865     .0942
   .879             -.1599
   .900    -.1802                     -.1989                     -.0707
   .905                     -.2366
   .919             -.2122
   .950                              -.1265   -.1174   -.1104
   .953                     -.1157
   .955             -.1197
   .965    -.1042
  1.000                      .0543             -.0060            -.0022

ALPHA ( 1) =   -3.991    BETA  ( 2) =     .189   MACH   =  .89993     Q      =  599.67     P      =  1057.8     RN/L   =  3.5780

 SECTION ( 1)LEFT WING BOT SURF             DEPENDENT VARIABLE CP

2Y/BW       .2990    .3640    .4270    .5340    .6730    .7800    .8870    .9720

  X/CW
   .010    -.0458   -.1243   -.3213  -1.0737  -1.2752  -1.0668  -1.0556
   .020     .0000   -.0943   -.3748  -1.2343  -1.3324  -1.3520   -.9620   -.5017
   .040             -.0780   -.4732
   .050    -.0560                    -1.1177  -1.2641  -1.2766   -.9480
   .069                                                                  -.4461
   .080                              -.6991
   .081                     -.3843
   .085             -.0288
   .094    -.0587
   .150                              -.5032   -.6478   -.9511   -.7691
   .157                                                                  -.3026
   .163             -.0910
   .177                     -.3985
   .229    -.0135
   .246             -.2499
   .250                              -.3496   -.3683   -.6140   -.6670
   .274                     -.3075
   .345                                                                  -.3166
   .390             -.2823
   .400                              -.2301   -.2162            -.4977
   .402                     -.2182
   .503                                                                  -.2550
   .550                              -.2341   -.2098
   .565                     -.7331
   .600                                                         -.2454
```

```
DATE 10 FEB 76             TABULATED PRESSURE DATA - OA148 ( AMES 11-073-1 )                                   PAGE 2163

                                  AMES 11-073(OA148) -140A/B/C/R ORB LEFT WING BOT              (XEBL41)

ALPHA ( 1) =   -3.991    BETA  ( 2) =     .189

 SECTION ( 1)LEFT WING BOT SURF             DEPENDENT VARIABLE CP

2Y/BW        .2990   .3640   .4270   .5340   .6730   .7800   .8870   .9720

  X/CW
   .637              -.2468
   .650                                              -.0722
   .670                                                              -.1933
   .700                                      -.0459
   .725                              -.0206
   .750                                               .1374  -.1076
   .760                      -.0096
   .775                               .1875   .0808
   .779               .0026
   .800                       .1081
   .834      -.0755
   .839               .0142
   .850                              -.1409  -.1699  -.1644
   .857                      -.1419
   .862                                                              -.1308
   .865       .1053
   .879              -.1532
   .900      -.1804                  -.2502                  -.0834
   .905                      -.2691
   .919              -.2430
   .950                              -.1854  -.1623  -.1710
   .953                      -.1559
   .955              -.1439
   .965      -.1210
  1.000                       .0036          -.0393          -.0350
ALPHA ( 1) =   -3.992    BETA  ( 3) =    4.274   MACH   =  .89993    Q      =  599.67     P      =  1057.8     RN/L   =  3.5780

 SECTION ( 1)LEFT WING BOT SURF             DEPENDENT VARIABLE CP

2Y/BW        .2990   .3640   .4270   .5340   .6730   .7800   .8870   .9720

  X/CW
   .010       .0094  -.0309  -.1556 -1.0370 -1.2789 -1.0856  -.8363
   .020       .0000   .0385  -.2192 -1.0943 -1.2938 -1.1031  -.8238  -.4833
   .040               .0217  -.3050
   .050      -.0086                  -.6904 -1.2228 -1.0995  -.8020
   .069                                                              -.4431
   .080                              -.5297
   .091                      -.3015
   .116               .0373
   .134      -.0117
   .150                              -.4147  -.4930  -.8899  -.77[illegible]
  [illegible]                                                        -.2909
   .163              -.0269
```

```
DATE 10 FEB 76          TABULATED PRESSURE DATA - CA148 ( AMES 11-073-1 )                                       PAGE 2170

                                      AMES 11-073(OA148) -140A/B/C/P ORB LEFT WING BOT            (XEBL41)

ALPHA ( 1) =   -3.932    BETA  ( 3) =    4.274

 SECTION ( 1)LEFT WING BOT SURF              DEPENDENT VARIABLE CP

2Y/BW        .2990     .3640     .4270     .5340     .6730     .7800     .8870     .9720

  X/CW
    .177                        -.3005
    .229     .0200
    .246              -.2032
    .250                                  -.3101    -.3305    -.5094    -.6800
    .274                        -.2696
    .345                                                                          -.2817
    .380              -.2296
    .400                                  -.2249    -.2429              -.4564
    .402                        -.1996
    .503                                                                          -.2178
    .550                                  -.2528    -.1923
    .565                        -.7637
    .600                                                                -.1618
    .637              -.2511
    .650                                                      -.0682
    .670                                                                          -.1923
    .700                                            -.0418
    .725                                  -.0229
    .750                                                       .1821    -.0064
    .760                        -.0142
    .775                                   .2321     .0862
    .798              -.0091
    .808                         .0992
    .834    -.0764
    .839               .0182
    .850                                  -.1458    -.1736    -.1960
    .857                        -.1291
    .862                                                                          -.1504
    .865     .0726
    .873              -.1396
    .900    -.1541                        -.2992                        -.1225
    .905                        -.2722
    .919              -.2359
    .950                                  -.2230    -.2197    -.2230
    .953                        -.1875
    .955              -.1653
    .965    -.1217
   1.000                        -.0653              -.0991              -.0677
```

DATE 10 FEB 76 TABULATED PRESSURE DATA - OA148 (AMES 11-073-1)

AMES 11-073(OA148) -140A/B/C/R ORB LEFT WING BOT (XEBL41)

ALPHA (2) = .052 BETA (1) = -3.863 MACH = .89853 Q = 598.47 P = 1059.0 RN/L = 3.5741

SECTION (1)LEFT WING BOT SURF DEPENDENT VARIABLE CP

2Y/BW	.2990	.3640	.4270	.5340	.6730	.7800	.8870	.9720
X/CW								
.010	.0378	.0887	.1121	-.6445	-.8116	-.7456	-.6145	
.020	.0000	.0726	-.0029	-.6086	-.7276	-.7462	-.8675	-.2687
.040		.0955	-.1676					
.050	.0032			-.5189	-.5633	-.6403	-.7492	
.063								-.3177
.080				-.3341				
.081			-.1923					
.086		.0982						
.094	-.0043							
.150				-.2038	-.2164	-.2336	-.2308	
.157								-.2282
.163		.0230						
.177			-.1698					
.229	.0353							
.246		-.1251						
.250				-.1343	-.1818	-.2030	-.2270	
.274			-.1115					
.345								-.1578
.390		-.0943						
.400				-.1059	-.1086		-.1406	
.402			-.0750					
.503								-.1077
.550				-.1537	-.1320			
.555			-.8563					
.600							-.0406	
.637		-.1615						
.650						-.0263		
.670								-.1013
.700					-.0065			
.725				.0088				
.750						.2189	.0917	
[illegible]			.0177					
[illegible]				2540	.1357			
[illegible]		.0355						
[illegible]			.1493					
[illegible]	-.0400							
.839		.0590						
[illegible]				-.1115	-.1328	-.1717		
[illegible]			-.1188					
[illegible]								-.2137
[illegible]	.1705							
[illegible]		-.1448						
[illegible]	-.1739			-.2054			-.2064	
[illegible]			-.2338					
[illegible]		-.2127						

```
                                AMES 11-073(OA148) -140A/B/C/R ORB LEFT WING BOT              (XEBL41)

ALPHA ( 2) =      .052    BETA  ( 1) =    -3.863

 SECTION ( 1)LEFT WING BOT SURF            DEPENDENT VARIABLE CP

2Y/BW        .2990   .3640   .4270   .5340   .6730   .7800   .8870   .9720

  X/CW
   .950                             -.1326  -.1024  -.0985
   .953                     -.1167
   .955             -.1186
   .965     -.0990
  1.000                      .0488           .0224           .0827

ALPHA ( 2) =      .055    BETA  ( 2) =      .182   MACH   =  .89853    Q      =  598.47     P      =  1059.0     RN/L   =  3.574

 SECTION ( 1)LEFT WING BOT SURF            DEPENDENT VARIABLE CP

2Y/BW        .2990   .3640   .4270   .5340   .6730   .7800   .8870   .9720

  X/CW
   .010      .0337   .1109   .1834  -.4618  -.6463  -.6882  -.6158
   .020      .0000   .1076   .1024  -.4715  -.5503  -.6018  -.7489  -.2639
   .040              .1268  -.0520
   .050      .0215                  -.3596  -.4568  -.5247  -.6016
   .069                                                             -.3019
   .080                             -.2760
   .081                     -.1188
   .086              .1310
   .094      .0119
   .150                             -.1811  -.1908  -.2173  -.2578
   .157                                                             -.2381
   .163              .0777
   .177                     -.1304
   .229      .0446
   .246             -.0832
   .250                             -.1281  -.1709  -.1957  -.2302
   .274                     -.0994
   .345                                                             -.1576
   .390             -.0764
   .400                             -.1115  -.1158          -.1462
   .402                     -.0734
   .503                                                             -.0832
   .550                             -.1588  -.1362
   .565                     -.8477
   .600                                                     -.0414
   .637             -.1642
   .650                                             -.0349
   .670                                                             -.1237
   .700                                     -.0135
   .725                              .0030
   .750                                              .2135   .0835
   .760                      .0167
```

```
                                     AMES 11-073(OA148) -140A/B/C/R ORB LEFT WING BOT                 (XEBL41)

ALPHA ( 2) =      .055    BETA  ( 2) =      .182

 SECTION ( 1)LEFT WING BOT SURF                      DEPENDENT VARIABLE CP

2Y/BW        .2990   .3640   .4270   .5340   .6730   .7800   .8870   .9720

  X/CW
   .775                               .2641   .1261
   .798              .0300
   .808                       .1474
   .834    -.0477
   .839              .0540
   .850                              -.1241  -.1597  -.1900
   .857                      -.1254
   .862                                                              -.2568
   .865     .1556
   .873             -.1442
   .900    -.1616                    -.2650                  -.3270
   .905                      -.2617
   .919             -.2477
   .950                              -.1854  -.1673  -.1672
   .953                      -.1551
   .955             -.1435
   .965    -.1204
  1.000                      -.0087          -.0154          -.0029
ALPHA ( 2) =      .070    BETA  ( 3) =     4.253   MACH   =  .89853     Q      =  598.47     P      =  1059.0     RN/L   =  3.5741

 SECTION ( 1)LEFT WING BOT SURF                      DEPENDENT VARIABLE CP

2Y/BW        .2990   .3640   .4270   .5340   .6730   .7800   .8870   .9720

  X/CW
   .010    -.0086    .0850   .2371  -.2793  -.4852  -.5237  -.5034
   .020     .0000    .1061   .1758  -.3379  -.3965  -.4605  -.5733  -.2347
   .040              .1262   .0255
   .050     .0140                    -.2325  -.3350  -.3822  -.4072
   .060                                                              -.2821
   .080                              -.2000
   .081                      -.0505
   .090              .1464
   .094     .0161
   .150                              -.1409  -.1589  -.1861  -.2565
   .157                                                              -.2344
   .163              .1110
   .177                      -.0304
   .203     .0517
   .245             -.0596
   .250                              -.1093  -.1524  -.1788  -.2230
   .274                      -.0918
   .345                                                              -.1665
   .347             -.0598
```

```
DATE 10 FEB 76          TABULATED PRESSURE DATA - OA148 ( AMES 11-073-1 )                                    PAGE 217

                                   AMES 11-073(OA148) -140A/B/C/R ORB LEFT WING BOT                (XEBL41)

ALPHA ( 2) =      .070    BETA  ( 3) =     4.253

 SECTION ( 1)LEFT WING BOT SURF                     DEPENDENT VARIABLE CP

2Y/BW         .2390   .3640   .4270   .5340   .6730   .7800   .8870   .9720

  X/CW
    .400                              -.1065  -.1183          -.1538
    .402                      -.0695
    .533                                                              -.1008
    .550                              -.1580  -.1413
    .565                      -.8755
    .600                                                      -.0586
    .637             -.1479
    .650                                              -.0408
    .670                                                              -.1375
    .700                                      -.0165
    .725                              -.0044
    .750                                               .2141   .0804
    .760                       .0118
    .775                               .2641   .1176
    .798              .0204
    .808                       .1379
    .814    -.0606
    .839              .0398
    .850                              -.1393  -.1823  -.2001
    .857                      -.1242
    .862                                                              -.3504
    .865     .1232
    .879             -.1302
    .900    -.1410                    -.2960                  -.3694
    .905                      -.2840
    .919             -.2462
    .950                              -.2490  -.2585  -.3208
    .953                      -.2067
    .955             -.1896
    .955    -.1348
   1.000                      -.0745          -.0881          -.0593
ALPHA ( 3) =    3.947   BETA  ( 1) =   -3.868   MACH   =  .89830    Q     =  598.51    P     =  1059.5    RN/L   =  3.577E

 SECTION ( 1)LEFT WING BOT SURF                     DEPENDENT VARIABLE CP

2Y/BW         .2390   .3540   .4270   .5340   .6730   .7800   .8870   .9720

  X/CW
    .010     .0187   .1227   .4025   .1175   .0472   .1426   .1768
    .020     .0000   .1678   .3435  -.0099   .0287   .0323   .0238  -.0874
    .040             .1936   .1722
    .050     .0522                   -.0132  -.0327  -.0096  -.0189
     059                                                              -.1232
    .080                             -.0210
```

AMES 11-073(OA148) -140A/B/C/R ORB LEFT WING BOT (XEBL41)

ALPHA (3) = 3.947 BETA (1) = -3.858

SECTION (1)LEFT WING BOT SURF DEPENDENT VARIABLE CP

2Y/BW	.2990	.3640	.4270	.5340	.6730	.7800	.8870	.9720
X/CW								
.081			.0727					
.085		.2286						
.094	.0618							
.150				.0171	.0183	.0110	-.0324	
.157								-.1718
.163		.1955						
.177			.0302					
.229	.1049							
.246		.0453						
.250				.0252	.0029	-.0139	-.0495	
.274			.0376					
.345								-.1088
.330		.0422						
.400				.0119	.0086		-.0483	
.402			.0400					
.503								-.0978
.550				-.0516	-.0504			
.565			-.9209					
.600							-.0336	
.637		-.0556						
.650						-.0167		
.670								-.0416
.700					.0254			
.725				.0514				
.750						.2507	.1231	
.760			.0494					
[illegible]				3192	.1712			
[illegible]		.0710						
[illegible]			.1779					
[illegible]	-.0138							
.839		.0826						
.850				-.0921	-.1291	-.1586		
[illegible]			-.0906					
[illegible]								-.2520
.865	.2105							
[illegible]		-.1094						
[illegible]	-.1231			-.1923			-.2689	
[illegible]			-.2022					
[illegible]		-.1901						
[illegible]				-.1066	-.0895	-.2022		
[illegible]			-.0975					
[illegible]		-.1011						
[illegible]	-.0737							
[illegible]			.0677		.0856		-.3190	

AMES 11-073(OA148) -140A/B/C/R ORB LEFT WING BOT (XE8L41)

ALPHA (3) = 4.018 BETA (2) = .184 MACH = .89830 Q = 598.51 P = 1059.5 RN/L = 3.5778

SECTION (1)LEFT WING BOT SURF DEPENDENT VARIABLE CP

2Y/BW	.2990	.3640	.4270	.5340	.6730	.7800	.8870	.9720
X/CW								
.010	-.0729	-.0050	.3712	.1980	.1143	.1851	.1902	
.020	.0000	.0970	.3523	.0736	.0823	.0734	.0609	-.1957
.040		.1337	.2161					
.050	.0213			.0455	.0078	.0085	.0030	
.069								-.2035
.080				.0285				
.081			.1107					
.086		.2132						
.094	.0388							
.150				.0363	.0224	.0166	-.0476	
.157								-.1997
.163		.2193						
.177			.0560					
.229	.0954							
.246		.0695						
.250				.0265	.0014	-.0189	-.0692	
.274			.0392					
.345								-.1658
.390		.0544						
.400				.0030	.0023		-.0642	
.402			.0335					
.503								-.1392
.550				-.0638	-.0640			
.555			-.9038					
.600							-.0549	
.637		-.0680						
.650						-.0204		
.670								-.0889
.700					.0262			
.725				.0424				
.750						.2369	.1014	
.760			.0479					
.775				.3135	.1631			
.798		.0619						
.808			.1761					
.834	-.0154							
.839		.0761						
.850				-.1039	-.1511	-.1720		
.857			-.0864					
.862								-.3036
.865	.1835							
.879		-.1050						
.900	-.1226			-.2329			-.3046	
.905			-.2176					
.919		-.2049						

REPRODUCIBILITY OF THE
ORIGINAL PAGE IS POOR

```
DATE 10 FEB 76          TABULATED PRESSURE DATA - OA148 ( AMES 11-073-1 )                                  PAGE 2177

                                 AMES 11-073(OA148) -140A/B/C/R ORB LEFT WING BOT               (XEBL41)

ALPHA ( 3) =     4.018    BETA  ( 2) =      .184

 SECTION ( 1)LEFT WING BOT SURF              DEPENDENT VARIABLE CP

2Y/BW        .2990   .3640   .4270   .5340   .6730   .7800   .8870   .9720

  X/CW
   .950                             -.1665  -.1400  -.1710
   .953                     -.1480
   .955             -.1374
   .965    -.0971
  1.000                     -.0042          -.0088          -.2553

ALPHA ( 3) =     4.018    BETA  ( 3) =     4.245   MACH   =  .89830     Q      =  598.51      P      =  1059.5     CN/L    =  3.5778

 SECTION ( 1)LEFT WING BOT SURF              DEPENDENT VARIABLE CP

2Y/BW        .2990   .3640   .4270   .5340   .6730   .7800   .8870   .9720

  X/CW
   .010    -.2160  -.1588   .2965   .2675   .1791   .2298   .2307
   .020     .0000  -.0098   .3238   .1550   .1315   .1225   .1105  -.3540
   .040             .0383   .2356
   .050    -.0355              .    .1037   .0528   .0461   .0333
   .059                                                             -.3033
   .080                             .0695
   .091                     .1391
   .096             .1747
   .134     .0037
   .150                             .0547   .0368   .0307  -.0469
   .157                                                             -.2408
   .163             .2204
   .177                     .0755
   .223     .0757
   .245             .0814
   .260                             .0350   .0082  -.0039  -.0774
   .274                     .0528
   .345                                                             -.2097
   .330             .0579
   .400                             .0025   .0070          -.0746
   .402                     .0345
   .513                                                             -.1872
   .550                            -.0653  -.0607
   .555                    -.9346
   .600                                                    -.0545
   .637            -.0631
   .650                                            -.0174
   .670                                                             -.1356
   .700                                     .0134
   .725                             .0319
   .750                                             .2247   .0712
   .760                     .0438
```

AMES 11-073(OA148) -140A/B/C/R ORB LEFT WING BOT (XF9L41)

ALPHA (3) = 4.018 BETA (3) = 4.245

SECTION (1)LEFT WING BOT SURF DEPENDENT VARIABLE CP

2Y/BW	.2990	.3640	.4270	.5340	.6730	.7800	.8870	.9720
X/CW								
.775				.3090	.1413			
.798		.0519						
.808			.1545					
.834	-.0273							
.839		.0652						
.850				-.1099	-.1609	-.1745		
.857			-.0897					
.862								-.4369
.865	.1710							
.879		-.0963						
.900	-.1070			-.2574			-.3097	
.905			-.2232					
.919		-.2098						
.950				-.2201	-.1888	-.1608		
.953			-.1915					
.955		-.1714						
.965	-.1122							
1.000			-.0933		-.0614		-.0554	

ALPHA (4) = 7.919 BETA (1) = -3.861 MACH = .89927 Q = 599.06 P = 1058.3 RN/L = 3.5789

SECTION (1)LEFT WING BOT SURF DEPENDENT VARIABLE CP

2Y/BW	.2990	.3640	.4270	.5340	.6730	.7800	.8870	.9720
X/CW								
.010	-.1597	-.1728	.4137	.5065	.4625	.5282	.4879	
.020	.0000	.0601	.4710	.3889	.4065	.4078	.3930	-.2784
.040		.1240	.3916					
.050	.0468			.2846	.2863	.2946	.2818	
.069								-.1780
.080				.2323				
.081			.2784					
.086		.2896						
.094	.0883							
.150				.1996	.2073	.2082	.1479	
.157								-.1695
.163		.3367						
.177			.2021					
.229	.1619							
.246		.1972						
.250				.1691	.1617	.1427	.0879	
.274			.1727					
.345								-.0534
.390		.1655						

```
DATE 10 FEB 76            TABULATED PRESSURE DATA - OA148 ( AMES 11-073-1 )
                                    AMES 11-073(OA148) -140A/B/C/R ORB LEFT WING BOT                 (XEBL41)

ALPHA ( 4) =     7.919    BETA  ( 1) =    -3.861

 SECTION ( 1)LEFT WING BOT SURF                 DEPENDENT VARIABLE CP

2Y/BW        .2990   .3640   .4270   .5340   .6730   .7800   .8870   .9720

  X/CW
    .400                             .1202   .1206           .0644
    .402                     .1492                                   -.0624
    .503
    .550                             .0341   .0330
    .565                    -.6407
    .600                                                     .0333
    .637             .0236
    .650                                             .0477
    .670                                                             -.0287
    .700                                     .0572
    .725                             .0891
    .750                                             .2806   .1462
    .760                     .0836
    .775                             .3541   .1642
    .798             .0990
    .808                     .2075
    .834     .0198
    .839             .1034
    .850                            -.0776  -.1206  -.1232
    .857                    -.0600
    .862                                                             -.2523
    .865     .2386
    .879            -.0958
    .900    -.1185                  -.2311                  -.2333
    .905                    -.2242
    .919            -.2087
    .940                            -.1976  -.2319  -.2589
    .953                    -.1254
    .955            -.1150
    .965    -.0915
   1.000                     .0791          -.0835          -.5360
ALPHA ( 4) =     7.925    BETA  ( 2) =      .181   MACH   =  .89927     Q      =  599.06     P      =  1058.3     RN/L   =  3.5789

 SECTION ( 1)LEFT WING BOT SURF                 DEPENDENT VARIABLE CP

2Y/BW        .2990   .3640   .4270   .5340   .6730   .7800   .8870   .9720

  X/CW
    .010    -.3543  -.3863   .2685   .5035   .4486   .4796   .4315
    .020     .0000  -.0937   .3859   .4099   .3928   .3980   .3621  -.4568
    .040            -.0028   .3724
    .050    -.0319                   .3090   .2926   .2945   .2641
    .059                                                             -.3105
    .090                             .2515
```

```
                       AMES 11-073(OA148) -140A/B/C/R ORB LEFT WING BOT           (XEBL41)

ALPHA ( 4) =     7.925    BETA  ( 2) =      .181

 SECTION ( 1)LEFT WING BOT SURF           DEPENDENT VARIABLE CP

2Y/BW        .2950     .3040     .4270     .5340     .6730     .7800     .8870     .9720

  X/CW
    .061                         .2815
    .086               .2243
    .094     .0396
    .110                                   .2005     .2096     .1990     .1305
    .127                                                                          -.2092
    .163               .3211
    .177                         .2090
    .229     .1348
    .246               .1949
    .250                                   .1632     .1629     .1341     .0677
    .274                         .1698
    .345                                                                          -.1194
    .390               .1667
    .400                                   .1064     .1129               .0305
    .402                         .1387
    .503                                                                          -.1199
    .550                                   .0351     .0242
    .565                        -.6449
    .600                                                                -.0006
    .637               .0204
    .650                                                       .0277
    .670                                                                          -.0762
    .700                                             .0446
    .725                                   .0859
    .750                                                       .2639     .1260
    .760                         .0860
    .775                                   .3519     .1679
    .798               .0993
    .808                         .2039
    .840     .0135
    .849               .1047
    .850                                  -.0786    -.1381    -.1341
    .857                        -.0651
    .862                                                                          -.3065
    .865     .2234
    .879              -.0803
    .900    -.1137                        -.2324                        -.2782
    .905                        -.2157
    .919              -.1916
    .950                                  -.1923    -.2159    -.2668
    .953                        -.1308
    .955              -.1274
    .965    -.0973
   1.000                         .0554              -.0900              -.5711
```

```
DATE 10 FEB 76            TABULATED PRESSURE DATA - OA148 ( AMES 11-073-1 )

                                    AMES 11-073(OA148) -140A/B/C/R ORB LEFT WING BOT               (XEBL41)

ALPHA ( 4) =     7.877    BETA  ( 3) =    4.247   MACH    =   .89927     Q       =  599.06     P       =  1058.3     RN/L    =  3.5789

 SECTION ( 1)LEFT WING BOT SURF            DEPENDENT VARIABLE CP

2Y/BW        .2990    .3640    .4270    .5340    .6730    .7800    .8870    .9720

  X/CW
   .010    -.5342   -.3309    .0967    .4597    .4108    .4137    .3662
   .020     .0000   -.1627    .2636    3959     .3728    .3653    .3211   -.6402
   .040             -.0891    .3233
   .050    -.1204                      .3073    .2798    .2746    .2432
   .069                                                                  -.4264
   .080                                .2506
   .081                       .2619
   .085              .1489
   .094    -.0312
   .150                                .1954    .2005    .1915    .1057
   .157                                                                  -.2538
   .163              .2832
   .177                       .2003
   .229     .0960
   .246              .1757
   .250                                .1512    .1474    .1301    .0458
   .274                       .1659
   .345                                                                  -.1792
   .390              .1572
   .400                                .1023    .1057             .0102
   .402                       .1254
   .503                                                                  -.1735
   .550                                .0243    .0223
   .565                      -.7154
   .600                                                          -.0204
   .637              .0187
   .650                                                  .0191
   .670                                                                  -.1305
   .700                                         .0379
   .725                                .0772
   .750                                                  .2412    .1067
   .760                       .0818
   .775                                .3289    .1484
   .793              .0895
   .808                       .1855
   .834     .0086
   .839              .0322
   .850                               -.0805   -.1394   -.1297
   .857                      -.0590
   .862                                                                  -.3576
   .865     .2163
   .879             -.0689
   .900    -.0898                     -.2169                     -.2659
   .925                      -.1946
   .9[illegible]             -.1625
```

```
                        AMES 11-073(OA148) -140A/B/C/R ORB LEFT WING BOT              (XE8L41)

ALPHA ( 4) =    7.877    BETA  ( 3) =    4.247

 SECTION ( 1)LEFT WING BOT SURF            DEPENDENT VARIABLE CP

2Y/BW        .2930   .3540   .4270   .5340   .6730   .7800   .8870   .9720

  X/CW
    .950                             -.1929  -.1960  -.2557
    .953                     -.1600
    .955             -.1343
    .965     -.0850
   1.000                     -.0078          -.0758          -.5906
ALPHA ( 5) =   11.893    BETA  ( 1) =   -3.850   MACH   =  .89863     Q      =  598.63     P      =  1059.0     RN/L   =  3 5769

 SECTION ( 1)LEFT WING BOT SURF            DEPENDENT VARIABLE CP

2Y/BW        .2930   .3540   .4270   .5340   .6730   .7800   .8870   .9720

  X/CW
    .010     -.4667  -.5633   .2036   .6357   .6163   .5934   .5357
    .020      .0000  -.1359   .4178   .5855   .5832   .5721   .5220  -.4196
    .040             -.0269   .4693
    .050     -.0114                   .4876   .4825   .4772   .4473
    .069                                                             -.2317
    .080                              .4208
    .081                      .4215
    .086              .2837
    .094      .0852
    .150                              .3537   .3606   .3575   .2823
    .157                                                             -.1708
    .163              .4253
    .177                      .3388
    .229      .2141
    .246              .3126
    .250                              .2926   .2913   .2752   .2062
    .274                      2916
    .345                                                             -.0248
    .390              .2759
    .400                              .2213   .2223           .1466
    .402                      .2441
    .503                                                             -.0501
    .550                              .1235   .1209
    .565                     -.6010
    .600                                                      .0852
    .637              .1093
    .650                                              .1095
    .670                                                             -.0221
    .700                                      .1090
    .725                              .1311
    .750                                              .3091   .1858
    .760                      .1194
```

```
                              AMES 11-073(OA148) -140A/B/C/R ORB LEFT WING BOT              (XEBL41)

ALPHA ( 5) =   11.893    BETA  ( 1) =    -3.850

 SECTION ( 1)LEFT WING BOT SURF            DEPENDENT VARIABLE CP

2Y/BW        .2990    .3640    .4270    .5340    .6730    .7800    .8870    .9720

  X/CW
    .775                                .3900    .2105
    .798              .1308
    .808                       .2396
    .834    .0484
    .839              .1261
    .850                               -.0437   -.0926   -.0757
    .857                      -.0341
    .862                                                                   -.2547
    .865    .2741
    .879             -.0673
    .900   -.1047                      -.2000                     -.1729
    .905                      -.2158
    .919             -.2232
    .950                               -.2769   -.2537   -.2317
    .953                      -.2139
    .965             -.2016
    .985   -.1666
   1.000                      -.0512            -.3737            -.6051

ALPHA ( 5) =   11.848    BETA  ( 2) =     .191   MACH   =  .89863    Q     =  598.63    P     =  1059.0    RN/L   =  3.5769

 SECTION ( 1)LEFT WING BOT SURF            DEPENDENT VARIABLE CP

2Y/BW        .2990    .3640    .4270    .5340    .6730    .7800    .8870    .9720

  X/CW
    .010   -.6859   -.4038   -.0097    .5465    .5307    .4763    .4185
    .020    .0000   -.2040    .2651    .5356    .5280    .5088    .4409   -.6093
    .040             -.1083    .4135
    .050   -.1125                       .4625    .4612    .4324    .3940
    .069                                                                   -.3750
    .080                                .4023
    .081                       .3874
    .086              .1941
    .094    .0140
    .150                                .3353    .3462    .3325    .2451
    .157                                                                   -.2327
    .163              .3721
    .177                       .3225
    .223    .1693
    .245              .2840
    .250                                .2752    .2667    .2563    .1667
    [illegible]                .2794
    [illegible]                                                            -.1113
    .330              .2608
```

```
                              AMES 11-073(OA148) -140A/B/C/R ORB LEFT WING BOT          (XEBL41)

ALPHA ( 5) =    11.848    BETA  ( 2) =      .191

 SECTION ( 1)LEFT WING BOT SURF                DEPENDENT VARIABLE CP

2Y/BW         .2990    .3640    .4270    .5340    .6730    .7800    .8870    .9720

  X/CW
   .400                                   .2085    .2040             .1092
   .402                          .2296
   .503                                                                     -.1257
   .550                                   .1147    .1134
   .565                         -.6139
   .600                                                              .0579
   .637                .0961
   .650                                                     .0894
   .670                                                                     -.0712
   .700                                            .0940
   .725                                   .1177
   .750                                                     .2821    .1582
   .760                          .1185
   .775                                   .3830    .1914
   .798                .1298
   .808                          .2279
   .834       .0438
   .839                .1298
   .850                                  -.0428   -.1052   -.0261
   .857                         -.0407
   .862                                                                     -.3143
   .865       .2678
   .879               -.0558
   .900      -.0859                      -.2063                     -.1972
   .905                         -.2087
   .919               -.1905
   .950                                  -.2612   -.2542   -.2388
   .953                         -.2350
   .955               -.1952
   .965      -.1425
  1.000                         -.1068            -.3295            -.6237
ALPHA ( 5) =    11.881    BETA  ( 3) =     4.259   MACH    =  .89863     Q      =  598.63      P      =  1059.0     RN/L   =  3.5769

 SECTION ( 1)LEFT WING BOT SURF                DEPENDENT VARIABLE CP

2Y/BW         .2990    .3640    .4270    .5340    .6730    .7800    .8870    .9720

  X/CW
   .010      -.8049   -.3828   -.2239    .4410    .4298    .3520    .2859
   .020       .0000   -.3096    .0962    .4711    .4564    .4312    .3596   -.7494
   .040               -.2168    .3258
   .050      -.2028                      .4263    .4186    .3918    .3399
   .069                                                                     -.4864
   .080                                   .3707
```

AMES 11-073(OA148) -140A/B/C/R ORB LEFT WING BOT (XEBL41)

ALPHA (5) = 11.881 BETA (3) = 4.259

SECTION (1)LEFT WING BOT SURF DEPENDENT VARIABLE CP

2Y/BW	.2990	.3640	.4270	.5340	.6730	.7800	.8870	.9720
X/CW								
.081			.3405					
.086		.1113						
.094	-.0595							
.150				.3071	.3187	.3107	.2130	
.157								-.2918
.163		.3223						
.177			.3075					
.229	.1139							
.246		.2516						
.250				.2626	.2509	.2320	.1420	
.274			.2661					
.345								-.1790
.390		.2419						
.400				.1964	.1904		.0893	
.402			.2125					
.503								-.1806
.550				.1055	.0960			
.565			-.6106					
.600							.0233	
.637		.0874						
.650						.0658		
.670								-.1211
.700					.0752			
.725				.1114				
.750						.2469	.1200	
.760			.1182					
.775				.3622	.1641			
.798		.1253						
.808			.2180					
.834	.0391							
.839		.1277						
.850				-.0532	-.1224	-.1004		
.857			-.0296					
.862								-.3620
.865	.2669							
.879		-.0405						
.900	-.0576			-.2107			-.2218	
.905			-.1860					
.919		-.1743						
.930				-.2687	-.2404	-.2461		
[illegible]			-.2313					
[illegible]		-.1890						
.985	-.1374							
1.000			-.1706		-.2962		-.6726	

```
                                        AMES 11-073(OA148) -140A/B/C/R ORB LEFT WING BOT             (XEBL42)   ( 05 AUG 75  )

              REFERENCE DATA                                                                          PARAMETRIC DATA

SREF   =  2690.0000 SQ.FT.   XMRP  =  1076.6800 IN. XO                               RUDDER =    10.000   SPDBRK =     85.000
LREF   =   474.8000 IN.      YMRP  =      .0000 IN. YO                               BDFLAP =    16.300   L-ELVN =     10.000
BREF   =   936.0680 IN.      ZMRP  =   375.0000 IN. ZO                               R-ELVN =    10.000   MACH   =       .600
SCALE  =      .0300

ALPHA ( 1) =   -4.049    BETA  ( 1) =   -7.852   MACH    =  .59622     Q      =  593.85     P      =  2386.3     RN/L    =  4.8696

 SECTION ( 1)LEFT WING BOT SURF             DEPENDENT VARIABLE CP

2Y/BW        .2990   .3640   .4270   .5340   .6730   .7800   .8870   .9720

 X/CW
   .010    -.2875  -.6179 -1.0166 -2.1182 -2.1167 -1.8533 -2.0036
   .020     .0000  -.5500 -1.0746 -1.9464 -2.0035 -1.4805 -1.8464  -.7629
   .040            -.5038  -.9379
   .050    -.2366                  -.9080  -.9263 -1.0227  -.9617
   .069                                                             -.6143
   .080                            -.6723
   .091                    -.5912
   .086            -.3242
   .094    -.2181
   .150                            -.4074  -.4181  -.4447  -.4032
   .157                                                             -.2957
   .163            -.3485
   .177                    -.3499
   .229    -.1722
   .246            -.3497
   .250                            -.2534  -.2751  -.2955  -.2741
   .274                    -.2357
   .345                                                             -.2157
   .390            -.2004
   .400                            -.1578  -.1552          -.1616
   .402                    -.1436
   .503                                                             -.1838
   .550                            -.1331  -.1236
   .565                    -.2385
   .600                                                    -.0844
   .637            -.1499
   .650                                            -.0549
   .670                                                             -.1193
   .700                                    -.0514
   [illegible]                             -.0180
   [illegible]                                      .1029   .0196
   .760                    -.0200
   .775                             .1253   .0652
   .798            -.0012
   .806                     .0497
   .834    -.0648
   .839            -.0244
   .850                            -.0706  -.0577  -.0642
```

```
                              AMES 11-073(OA148) -140A/B/C/R ORB LEFT WING BOT            (XEBL42)

ALPHA ( 1) =   -4.049    BETA  ( 1) =   -7.852

 SECTION ( 1)LEFT WING BOT SURF             DEPENDENT VARIABLE CP

2Y/BW        .2990   .3640   .4270   .5340   .6730   .7800   .8870   .9720

  X/CW
    .857                     -.0743
    .862                                                             -.1278
    .865     .0560
    .879            -.1028
    .900    -.1266                   -.1017                  -.0794
    .905                     -.1121
    .919            -.1221
    .950                             -.0479  -.0353  -.0352
    .953                     -.0519
    .955            -.0879
    .965    -.0705
   1.000                      .0552           .0289           .0682

ALPHA ( 1) =   -3.971    BETA  ( 2) =   -3.842   MACH   =  .59622     Q      =  593.85     P      =  2386.3     RN/L   =  4.8696

 SECTION ( 1)LEFT WING BOT SURF             DEPENDENT VARIABLE CP

2Y/BW        .2990   .3640   .4270   .5340   .6730   .7800   .8870   .9720

  X/CW
    .010    -.1793  -.4001  -.7424 -1.9529 -2.0218 -2.1148 -1.9388
    .020     .0000  -.3527  -.8215 -1.5366 -1.7241 -1.6505 -1.7488  -.6532
    .040            -.3177  -.7098
    .050    -.1622                   -.8263  -.8502  -.8855  -.8679
    .063                                                             -.5178
    .080                             -.6068
    .081                     -.4943
    .085            -.2117
    .094    -.1447
    .150                             -.3721  -.3861  -.3984  -.3770
    .157                                                             -.2778
    .163            -.2565
    .177                     -.3128
    .194    -.1033
    .240            -.2910
    .250                             -.2339  -.2557  -.2751  -.2607
    .274                     -.2117
    .345                                                             -.1794
    .390            -.1784
    .400                             -.1466  -.1501          -.1515
    .412                     -.1341
    .503                                                             -.1662
    .550                             -.1291  -.1197
    .565                     -.1843
    .600                                                     -.0762
```

```
                                 AMES 11-073(OA148) -140A/B/C/R ORB LEFT WING BOT               (XEBL42)

ALPHA ( 1) =    -3.971    BETA  ( 2) =    -3.842

 SECTION ( 1)LEFT WING BOT SURF               DEPENDENT VARIABLE CP

2Y/BW        .2990   .3540   .4270   .5340   .6730   .7800   .8870   .9720

  X/CW
    .637             -.1356
    .650                                             -.0473
    .670                                                             -.1093
    .700                                     -.0461
    .725                             -.0165
    .750                                              .1087   .0280
    .760                     -.0128
    .775                              .1405   .0622
    .793              .0019
    .808                      .0640
    .834     -.0587
    .843             -.0163
    .850                             -.0720  -.0678  -.0919
    .857                     -.0735
    .862                                                             -.1224
    .865      .0716
    .873             -.0973
    .900     -.1164                  -.1046                  -.0852
    .905                     -.1175
    .919             -.1199
    .950                             -.0595  -.0444  -.0471
    .953                     -.0594
    .955             -.0886
    .965     -.0592
   1.000                      .0526           .0273           .0615

ALPHA ( 1) =    -3.889    BETA  ( 3) =      .191   MACH   =  .59622     Q     =  593.85     P     =  2336.3     RN/L   =  4.869E

 SECTION ( 1)LEFT WING BOT SURF               DEPENDENT VARIABLE CP

2Y/BW        .2930   .3540   .4270   .5340   .6730   .7800   .8870   .9720

  X/CW
    .010     -.0809  -.1922  -.4941 -1.6436 -1.6877 -2.0435 -1.8149
    .020      .0000  -.1764  -.5650 -1.2502 -1.3771 -1.4604 -1.6428  -.5730
    .040             -.1598  -.5235
    .050     -.0856                  -.7065  -.7723  -.8188  -.8091
    .059                                                             -.4106
    .080                             -.5256
    .081                     -.4063
    .085             -.1056
    .094     -.0879
    .150                             -.3221  -.3474  -.3627  -.3541
    .157                                                             -.2499
    .164             -.1721
```

AMES 11-073(OA148) -140A/B/C/R ORB LEFT WING BOT (XEBL42)

ALPHA (1) = -3.888 BETA (3) = .191

SECTION (1)LEFT WING BOT SURF DEPENDENT VARIABLE CP

2Y/BW	.2930	.3040	.4270	.5340	.6730	.7800	.8870	.9720
X/CW								
.177			-.2698					
.229	-.0673							
.246		-.2395						
.250				-.2130	-.2434	-.2531	-.1454	
.274			-.1869					
.345								-.1507
.330		-.1565						
.400				-.1397	-.1408		-.1369	
.402			-.1247					
.503								-.1393
.550				.1246	-.1163			
.555			-.1823					
.600							-.0680	
.537		-.1326						
.650						-.0481		
.670								-.1022
.700					-.0472			
.725				-.0161				
.750						.1148	.0321	
.760			-.0075					
.775				.1579	.0633			
.799		.0040						
.828			.0582					
.834	-.0549							
.849		-.0116						
.850				-.0813	-.0907	-.0942		
.857			-.0791					
.862								-.1186
[illegible]	.0817							
[illegible]		-.0956						
[illegible]	-.1100			-.1200			-.0927	
.905			-.1204					
.919		-.1232						
.930				-.0701	-.0546	-.0594		
.943			-.0705					
.955		-.0954						
.965	-.0784							
1.000			.0463		.0317		.0461	

```
                              AMES 11-073(OA148) -140A/B/C/R ORB LEFT WING BOT            (XEBL42)

ALPHA ( 1) =   -3.993   BETA  ( 4) =   4.273  MACH  =  .59622    Q     =  593.85    P     =  2386.3    RN/L   =  4.6655

 SECTION ( 1)LEFT WING BOT SURF            DEPENDENT VARIABLE CP

2Y/BW        .2990   .3540   .4270   .5340   .6730   .7800   .8870   .9720

  X/CW
    .010    -.0361  -.0783  -.2994 -1.3027 -1.4216 -1.6881 -1.5325
    .020     .0000  -.0646  -.3672 -1.0513 -1.0985 -1.1860 -1.3712  -.4392
    .040            -.0523  -.3943
    .050    -.0491                  -.5995  -.6519  -.7170  -.7269
    .069                                                            -.3167
    .080                            -.4469
    .081                    -.3151
    .086            -.0331
    .094    -.0494
    .150                            -.2840  -.3046  -.3170  -.3186
    .157                                                            -.2241
    .163            -.0967
    .177                    -.2240
    .229    -.0256
    .245            -.1904
    [illegible]                     -.1887  -.2167  -.2273  -.2189
    .274                    -.1664
    .345                                                            -.1237
    .390            -.1367
    .400                            -.1285  -.1249          -.1192
    .402                    -.1151
    .503                                                            -.1168
    .550                            -.1128  -.1080
    .555                    -.1838
    .600                                                    -.0579
    .637            -.1251
    .650                                            -.0405
    .670                                                            -.0921
    .700                                    -.0422
    .725                            -.0142
    .750                                             .1198   .0373
    .760                    -.0063
    .775                             .1705   .0608
    .798             .0044
    .808                     .0643
    .834    -.0544
    .839            -.0049
    .850                            -.0804  -.0882  -.0947
    .857                    -.0729
    .862                                                            -.1152
    .865     .0657
    .879            -.0851
    .900    -.0950                  -.1197                  -.0973
    .905                    -.1193
    .919            -.1186
```

```
                                       AMES 11-073(OA148) -140A/B/C/R ORB LEFT WING BOT              (XEBL42)

ALPHA ( 1) =   -3.983    BETA  ( 4) =     4.273

 SECTION ( 1)LEFT WING BOT SURF              DEPENDENT VARIABLE CP

2Y/BW        .2990   .3640   .4270   .5340   .6730   .7800   .8870   .9720

  X/CW
    .950                             -.0721  -.0655  -.0663
    .953                     -.0720
    .955             -.0960
    .965    -.0715
   1.000                      .0353           .0321           .0302

ALPHA ( 1) =   -3.999    BETA  ( 5) =    8.343   MACH   =  .59622     Q      =  593.85     P      =  2386.3     RN/L   =  4.8696

 SECTION ( 1)LEFT WING BOT SURF              DEPENDENT VARIABLE CP

2Y/BW        .2990   .3640   .4270   .5340   .6730   .7800   .8870   .9720

  X/CW
    .010    -.0123   .0245  -.0926  -.9662 -1.1279 -1.3346 -1.2534
    .020     .0000   .0238  -.1512  -.7906  -.8412  -.9402 -1.1057  -.3268
    .040             .0304  -.2334
    .050    -.0216                  -.4608  -.5463  -.6169  -.6245
    .059                                                            -.2544
    .060                            -.3626
    .081                    -.2241
    .086             .0321
    .094    -.0213
    .150                            -.2336  -.2573  -.2677  -.2831
    .157                                                            -.2055
    .163            -.0359
    .177                    -.1760
    .229    -.0054
    .246            -.1454
    .250                            -.1626  -.1921  -.1970  -.1979
    .274                    -.1379
    .345                                                            -.1052
    .370            -.1153
    .400                            -.1104  -.1094          -.1081
    .402                    -.1000
    .553                                                            -.0946
    .560                            -.1039  -.0945
    .565                    -.2282
    .600                                                    -.0494
    .637            -.1141
    .650                                            -.0332
    .670                                                            -.0880
    .700                                    -.0320
    .725                            -.0115
    .750                                             .1245   .0394
    .760                    -.0012
```

AMES 11-073(OA148) -140A/B/C/R ORB LEFT WING BOT (XEBL42)

ALPHA (1) = -3.993 BETA (5) = 8.343

SECTION (1)LEFT WING BOT SURF DEPENDENT VARIABLE CP

2Y/BW	.2990	.3640	.4270	.5340	.6730	.7800	.8870	.9720
X/CW								
.775				.1777	.0613			
.798		.0101						
.808			.0657					
.834	-.0454							
.839		.0016						
.850				-.0758	-.0877	-.0865		
.857			-.0629					
.862								-.1177
.865	.0924							
.879		-.0728						
.900	-.0727			-.1120			-.0960	
.905			-.1015					
.919		-.1099						
.950				-.0715	-.0641	-.0621		
.953			-.0655					
.955		-.0915						
.965	-.0587							
1.000			.0293		.0297		.0247	

ALPHA (2) = -.003 BETA (1) = -7.885 MACH = .59612 Q = 593.61 P = 2386.1 RN/L = 4.8734

SECTION (1)LEFT WING BOT SURF DEPENDENT VARIABLE CP

2Y/BW	.2990	.3640	.4270	.5340	.6730	.7800	.8870	.9720
X/CW								
.010	.0041	-.0110	-.1092	-.8106	-.7901	-.6911	-.5092	
.020	.0000	-.0548	-.2367	-.7848	-.6093	-.6281	-.5841	-.1010
.040		-.0494	-.3226					
.050	-.0358			-.4517	-.4269	-.4397	-.3835	
.059								-.0998
.080				-.3401				
.091			-.2615					
.096		-.0197						
.134	-.0527							
.150				-.1951	-.1768	-.1642	-.1628	
.157								-.1676
.163		-.0980						
.177			-.1647					
.229	-.0384							
.246		-.1578						
[illegible]				-.1098	-.1246	-.1256	-.1176	
[illegible]			-.1075					
[illegible]								-.0588
.330		-.0852						

```
                                          AMES 11-073(OA148) -140A/B/C/R ORB LEFT WING BOT                  (XE8L42)

ALPHA ( 2) =     -.003    BETA  ( 1) =    -7.885

 SECTION ( 1)LEFT WING BOT SURF                     DEPENDENT VARIABLE CP

2Y/BW          .2990   .3640   .4270   .5340   .6730   .7800   .8870   .9720

  X/CW
    .400                               -.0657  -.0622          -.0591
    .402                       -.0534
    .503                                                               -.0778
    .550                               -.0709  -.0586
    .565                       -.2649
    .600                                                       -.0251
    .637               -.0949
    .650                                               -.0077
    .670                                                               -.0621
    .700                                       -.0099
    .725                                .0191
    .750                                                .1660   .0570
    .760                        .0098
    .775                                .1868   .1033
    .798                .0300
    .808                        .0880
    .834       -.0360
    .839                .0067
    .850                               -.0496  -.0489  -.0736
    .857                       -.0532
    .862                                                               -.1471
    .865        .1130
    .879               -.0799
    .900       -.1079                  -.0928                  -.0858
    .905                       -.1011
    .919               -.1089
    .950                               -.0504  -.0187  -.0373
    .953                       -.0458
    .955               -.0721
    .965       -.0622
   1.000                        .0668           .0350           .0467
ALPHA ( 2) =      .104    BETA  ( 2) =   -3.860   MACH   =  .59612    Q     =  593.61    P     =  2386.1    RN/L   =  4.8734

 SECTION ( 1)LEFT WING BOT SURF                     DEPENDENT VARIABLE CR

2Y/BW          .2930   .3640   .4270   .5340   .6730   .7800   .8870   .9720

  X/CW
    .010        .0212   .0516   .0192  -.6302  -.6454  -.5610  -.4108
    .020        .0000   .0343  -.0834  -.5828  -.5050  -.5027  -.4926  -.0923
    .040                .0352  -.2049
    .050       -.0149                  -.3587  -.3622  -.3599  -.3338
    .059                                                               -.0923
    .080                               -.2787
```

AMES 11-073(OA148) -140A/B/C/R ORB LEFT WING BOT (XEBL42)

ALPHA (2) = .104 BETA (2) = -3.860

SECTION (1)LEFT WING BOT SURF DEPENDENT VARIABLE CP

2Y/BW	.2930	.3640	.4270	.5340	6730	.7800	.8870	.9720
X/CW								
.081			-.1966					
.086		.0407						
.094	-.0209							
.150				-.1620	-.1535	-.1419	-.1503	
.157								-.1666
.163		-.0410						
.177			-.1313					
.229	-.0100							
.246		-.1245						
.250				-.0973	-.1136	-.1156	-.1168	
.274			-.0915					
.345								-.0630
.390		-.0700						
.400				-.0611	-.0563		-.0593	
.402			-.0501					
.503								-.0896
.550				-.0724	-.0650			
.565			-.2254					
.600							-.0323	
.637		-.0918						
.640						-.0129		
.670								-.0798
.700					-.0143			
.725				.0118				
.750						.1597	.0520	
.760			.0118					
.775				.1912	.0978			
.798		.0289						
.808			.0900					
.834	-.0302							
.839		.0097						
.840				-.0658	-.0615	-.0803		
.857			-.0591					
.862								-.1639
.865	.1189							
.879		-.0806						
.900	-.0995			-.1053			-.0933	
.905			-.1094					
.919		-.1114						
.950				-.0593	-.0443	-.0548		
.943			-.0577					
.955		-.0842						
.955	-.0552							
1.000			.0561		.0312		.0458	

AMES 11-073(OA148) -140A/B/C/R ORB LEFT WING BOT (XEBL42)

ALPHA (2) = .114 BETA (3) = .190 MACH = .59612 Q = 593.61 P = 2336.1 RN/L = 4.8734

SECTION (1)LEFT WING BOT SURF DEPENDENT VARIABLE CP

2Y/BW	.2990	.3640	.4270	.5340	.6730	.7800	.8870	.9720
X/CW								
.010	.0154	.0707	.1270	-.4248	-.4933	-.4496	-.3480	
.020	.0000	.0671	.0353	-.4406	-.4053	-.4137	-.4360	-.1145
.040		.0768	-.1068					
.050	.0019			-.2785	-.2967	-.3099	-.2945	
.069								-.1206
.080				-.2229				
.081			-.1363					
.086		.0832						
.094	-.0049							
.150				-.1364	-.1315	-.1272	-.1506	
.157								-.1686
.163		.0143						
.177			-.1047					
.229	.0101							
.246		-.0937						
.250				-.0891	-.1044	-.1114	-.1121	
.274			-.0783					
.345								-.0760
.390		-.0579						
.400				-.0615	-.0538		-.0613	
.402			-.0504					
.503								-.0983
.550				-.0712	-.0633			
.565			-.2356					
.600							-.0366	
.637		-.0902						
.650						-.0171		
.670								-.1016
.700					-.0187			
.725				.0091				
.750						.1490	.0475	
.760			.0115					
.775				.2011	.0845			
.798		.0276						
.809			.0920					
.824	-.0372							
.839		.0081						
.850				-.0562	-.0763	-.0860		
.857			-.0683					
.862								-.1685
.865	.1117							
.873		-.0817						
.900	-.0976			-.1145			-.1050	
[illegible]			-.1154					
[illegible]		-.1185						

```
                AMES 11-073(OA148) -140A/B/C/R ORB LEFT WING BOT          (XEBL42)

ALPHA ( 2) =     .114    BETA  ( 3) =     .190

 SECTION ( 1)LEFT WING BOT SURF          DEPENDENT VARIABLE CP

2Y/BW         .2990    .3640    .4270    .5340    .6730    .7800    .8870    .9720

  X/CW
  .950                                  -.0776   -.0517   -.0690
  .953                         -.0721
  .955                -.0992
  .955       -.0762
  1.000                         .0353             .0193             .0356
ALPHA ( 2) =     .111    BETA  ( 4) =    4.251   MACH   =  .59612   Q     =  593.61   P     =  2386.1   RN/L   =  4.8734

 SECTION ( 1)LEFT WING BOT SURF          DEPENDENT VARIABLE CP

2Y/BW         .2990    .3640    .4270    .5340    .6730    .7800    .8870    .9720

  X/CW
  .010       -.0246    .0456    .1776   -.2758   -.3475   -.2869   -.2107
  .020        .0000    .0643    .1105   -.3119   -.2842   -.3069   -.2899   -.1246
  .040                 .0821   -.0213
  .050       -.0084                     -.2072   -.2155   -.2353   -.2288
  .069                                                                      -.1422
  .080                                  -.1672
  .081                         -.0822
  .086                 .0974
  .094       -.0100
  .150                                  -.1113   -.1076   -.1029   -.1277
  .157                                                                      -.1749
  .163                 .0511
  .177                         -.0791
  .229        .0161
  .246                -.0672
  .250                                  -.0731   -.0894   -.0936   -.1047
  .274                         -.0622
  .345                                                                      -.0924
  .390                -.0433
  .400                                  -.0559   -.0484            -.0622
  .402                         -.0422
  .503                                                                      -.1110
  .550                                  -.0670   -.0609
  .565                         -.2188
  .600                                                             -.0366
  .637                -.0826
  .650                                                    -.0147
  .670                                                                      -.1207
  .700                                           -.0164
  .725                                   .0079
  .750                                                     .1428    .0429
  .760                          .0163
```

```
                         AMES 11-073(OA148) -140A/B/C/R ORB LEFT WING BOT              (XEBL42)

ALPHA ( 2) =      .111    BETA  ( 4) =    4.251

 SECTION ( 1)LEFT WING BOT SURF           DEPENDENT VARIABLE CP

2Y/BW         .2990   .3640   .4270   .5340   .6730   .7800   .8870   .9720

  X/CW
   .775                                .2025   .0784
   .798                .0239
   .808                        .0886
   .834    -.0354
   .839                .0081
   .850                              -.0706  -.0849  -.0866
   .857                       -.0670
   .862                                                              -.1856
   .865     .0976
   .879               -.0  6
   .900    -.0832                     -.1248                  -.1044
   .905                       -.1141
   .919               -.1186
   .950                               -.0830  -.0628  -.0776
   .953                       -.0759
   .965               -.0572
   .985    -.0744
  1.000                        .0204           .0145           .0331
ALPHA ( 2) =      .040    BETA  ( 5) =    8.310   MACH   =  .59612     Q     =  593.61     P     =  2386.1     RN/L   =  4.8734

 SECTION ( 1)LEFT WING BOT SURF           DEPENDENT VARIABLE CP

2Y/BW         .2990   .3640   .4270   .5340   .6730   .7800   .8870   .9720

  X/CW
   .010    -.1162  -.0298   .2003  -.1018  -.2101  -.1635  -.1250
   .020     .0000   .0137   .1695  -.1636  -.1903  -.2037  -.2152  -.1730
   .040             .0396   .0559
   .050    -.0399                  -.1180  -.1536  -.1770  -.16.0
   .069                                                              -.1858
   .080                            -.1119
   .091                    -.0224
   .065             .0960
   .094    -.0276
   .150                            -.0811  -.0781  -.0821  -.1219
   .157                                                              -.2104
   .163             .0809
   .177                    -.0431
   .199     .0069
   .246            -.0406
   .250                            -.0595  -.0725  -.0771  -.0980
   .274                    -.0447
   [illegible]                                                       -.1223
   .340            -.0352
```

AMES 11-073(OA148) -140A/B/C/R ORB LEFT WING BOT (XEBL42)

ALPHA (2) = .040 BETA (5) = 8.310

SECTION (1)LEFT WING BOT SURF DEPENDENT VARIABLE CP

2Y/BW X/CW	.2990	.3640	.4270	.5340	.6730	.7800	.0870	.9720
.400				-.0453	-.0407		-.0614	
.402			-.0343					
.503								-.1334
.550				-.0649	-.0513			
.565			-.2629					
.600							-.0401	
.637		-.0755						
.650						-.0126		
.670								-.1414
.700					-.0165			
.725				.0070				
.750						.1291	.0375	
.760			.0167					
775				.1951	.0663			
.798		.0241						
.808			.0800					
.834	-.0293							
.839		.0092						
.850				-.0642	-.0960	-.0891		
.857			-.0587					
.862								-.1904
.865	.1054							
.879		-.0646						
.900	-.0646			-.1185			-.1087	
.905			-.1026					
.919		-.1156						
.950				-.0834	-.0814	-.0821		
.953			-.0831					
.955		-.0980						
.965	-.0641							
1.000			.0060		.0072		.0224	

ALPHA (3) = 4.041 BETA (1) = -7.699 MACH = .59674 Q = 594.79 P = 2386.0 RN/L = 4.8833

SECTION (1)LEFT WING BOT SURF DEPENDENT VARIABLE CP

2Y/BW X/CW	.2990	.3640	.4270	.5340	.6730	.7800	.8870	.9720
.010	.0854	.1480	.3503	.0743	.1165	.2714	.3211	
.020	.0000	.1588	.2603	-.0416	.0736	.1062	.1733	.0000
.040		.1723	.0915					
.050	.0713			-.0391	.0061	.0469	.0907	
.069								-.0043
.080				-.0311				

REPRODUCIBILITY OF THE ORIGINAL PAGE IS POOR

DATE 10 FEB 76 TABULATED PRESSURE DATA - OA148 (AMES 11-073-1)

AMES 11-073(OA148) -140A/B/C/R ORB LEFT WING BOT (XE8L42)

ALPHA (3) = 4.041 BETA (1) = -7.899

SECTION (1)LEFT WING BOT SURF DEPENDENT VARIABLE CP

2Y/BW	.2930	.3640	.4270	.5340	.6730	.7800	.8870	.9720
X/CW								
.081			.0157					
.086		.1775						
.094	.0594							
.150				.0074	.0368	.0559	.0412	
.157								-.1244
.163		.1144						
.177			.0124					
[illegible]	.0589							
[illegible]		.0003						
[illegible]				.0285	.0299	.0310	.0265	
.274			.0233					
.345								.0023
.390		.0256						
.400				.0258	.0363		.0308	
.482			.0369					
.503								-.0426
.550				-.0101	.0047			
.565			-.3038					
.600							.0241	
.637		-.0346						
.650						.0403		
.670								-.0541
.700					.0311			
.725				.0546				
.750						.1891	.0928	
.760			.0452					
.775				.2329	.1314			
[illegible]		.0500						
[illegible]			.1235					
.834	-.0086							
.839		.0372						
[illegible]				-.0336	-.0289	-.0556		
[illegible]			-.0244					
[illegible]								-.1885
[illegible]	.1536							
[illegible]		-.0532						
[illegible]	-.0769			-.0818			-.0957	
[illegible]			-.0854					
[illegible]		-.0893						
[illegible]				-.0473	-.0127	-.0509		
[illegible]			-.0393					
[illegible]		-.0597						
[illegible]	-.0339							
1.000			.0642		.0252		-.0095	

```
                                   AMES 11-073(OA148) -140A/B/C/R ORB LEFT WING BOT              (XEBL42)

ALPHA ( 3) =    3.969    BETA  ( 2) =   -3.860   MACH   =  .59674     Q      =  594.79     P      =  2386.0     RN/L   =  4.8833

 SECTION ( 1)LEFT WING BOT SURF              DEPENDENT VARIABLE CP

2Y/BW       .2990   .3640   .4270   .5340   .6730   .7800   .8870   .9720

  X/CW
    .010    .0191   .0682   .3488   .1548   .1579   .2543   .3233
    .020    .0000   .1182   .2352   .0304   .1178   .1430   .1886  -.1128
    .040            .1454   .1447
    .050    .0512                   .0169   .0463   .0741   .0910
    .063                                                           -.0891
    .080                           -.0027
    .091                    .0547
    .096            .1834
    .134    .0490
    .150                            .0181   .0467   .0618   .0422
    .157                                                           -.1580
    .163            .1433
    .177                    .0270
    .229    .0734
    .246            .0189
    .250                            .0358   .0306   .0315   .0178
    .274                    .0310
    .345                                                           -.0511
    .390            .0323
    .400                            .0249   .0349           .0185
    .402                    .0372
    .503                                                           -.0838
    .550                           -.0081   .0024
    .565                   -.2586
    .600                                                    .0092
    .637           -.0311
    .650                                            .0266
    .670                                                           -.0822
    .700                                    .0191
    .715                            .0482
    .740                                            .1818   .0751
    .760                    .0450
    .775                            .2344   .1201
    .798            .0604
    .809                    .1250
    .834   -.0059
    .839            .0344
    .850                           -.0351  -.0440  -.0618
    .857                   -.0340
    .852                                                           -.2156
    .865    .1516
    .879           -.0550
    .900   -.0716                  -.0981                  -.1064
    .905                   -.0952
    .919           -.0920
```

AMES 11-073(OA148) -140A/B/C/R ORB LEFT WING BOT (XEBL42)

ALPHA (3) = 3.969 BETA (2) = -3.860

SECTION (1)LEFT WING BOT SURF DEPENDENT VARIABLE CP

2Y/BW	.2990	.3640	.4270	.5340	.6730	.7800	.8870	.9720
X/CW								
.950				-.0643	-.0358	-.0618		
.953			-.0509					
.955		-.0708						
.965	-.0448							
1.000			.0481		.0243		-.0007	

ALPHA (3) = 4.049 BETA (3) = .193 MACH = .59674 Q = 594.79 P = 2386.0 RN/L = 4.8833

SECTION (1)LEFT WING BOT SURF DEPENDENT VARIABLE CP

2Y/BW	.2990	.3640	.4270	.5340	.6730	.7800	.8870	.9720
X/CW								
.010	-.0896	-.0701	.3043	.2097	.1993	.2886	.3020	
.020	.0000	.0334	.2981	.1006	.1435	.1590	.1753	-.2393
.040		.0806	.1763					
.050	.0050			.0541	.0504	.0763	.0887	
.069								-.1914
.070				.0326				
.081			.0782					
.098		.1647						
.134	.0233							
.150				.0354	.0461	.0600	.0193	
.157								-.1933
.163		.1557						
.177			.0466					
.229	.0608							
.245		.0322						
[illegible]				.0317	.0278	.0269	-.0013	
.274			.0359					
[illegible]								-.1079
[illegible]		.0362						
.400				.0219	.0301		-.0015	
[illegible]			.0302					
[illegible]								-.1281
.550				-.0114	-.0062			
[illegible]			-.2529					
[illegible]							-.0051	
[illegible]		-.0358						
.650						.0201		
[illegible]								-.1259
[illegible]					.0162			
[illegible]				.0422				
[illegible]						.1560	.0558	
[illegible]			.0416					

```
                          AMES 11-073(OA148) -140A/B/C/R ORB LEFT WING BOT              (XEEL42)

ALPHA ( 3) =     4.049    BETA  ( 3) =      .193

 SECTION ( 1)LEFT WING BOT SURF               DEPENDENT VARIABLE CP

2Y/BW        .2990   .3640   .4270   .5340   .6730   .7800   .8870   .9720

  X/CW
    .775                             .2323   .1092
    .799             .0552
    .809                     .1205
    .834   -.0053
    .839             .0321
    .850                            -.0504  -.0596  -.0707
    .857                    -.0444
    .862                                                            -.2385
    .865    .1400
    .879            -.0559
    .900   -.0582                   -.1034                  -.1123
    .905                    -.0383
    .919            -.1018
    .940                            -.0765  -.0674  -.0723
    .953                    -.0707
    .955            -.0841
    .965   -.0632
   1.000                     .0185           .0139          -.0136
ALPHA ( 3) =     3.947    BETA  ( 4) =     4.242   MACH   =  .59674     Q      =  594.79     P      =  2365.0    RN/L   =  4.8233
 SECTION ( 1)LEFT WING BOT SURF               DEPENDENT VARIABLE CP

2Y/BW        .2990   .3640   .4270   .5340   .6730   .7800   .8870   .9720

  X/CW
    .010   -.2050  -.2329   .2271   .2479   .2190   .2959   .2871
    .020    .0000  -.0757   .2653   .1439   .1673   .1811   .1905  -.4138
    .040            -.0120   .1859
    .050   -.0491                    .0890   .0823   .0956   .1029
    .069                                                            -.3181
    .080                             .0507
    .081                     .0967
    .086             .1202
    .094   -.0139
    .150                             .0388   .0557   .0571   .0110
    .157                                                            -.2343
    .163             .1544
    .177                     .0525
    .229    .0404
    .245             .0374
    .250                             .0322   .0208   .0273  -.0089
    .274                     .0349
    .345                                                            -.1652
    .350             .0388
```

```
                              AMES 11-073(OA148) -140A/B/C/R ORB LEFT WING BOT              (XEBL42)

ALPHA ( 3) =    3.9[illegible]7    BETA  ( 4) =    4.242

 SECTION ( 1)LEFT WI[illegible] BOT SURF              DEPENDENT VARIABLE CP

2Y/BW        .2990   .3340   .4270   .5340   .6730   .7800   .8870   .9720

  X/CW
    .400                             .0162   .0246           -.0101
    .402                     .0311
    .503                                                             -.1870
    .550                            -.0154  -.0100
    .565                    -.2651
    .600                                                     -.0224
    .617            -.0353
    .650                                             .0151
    .670                                                             -.1644
    .700                                     .0154
    .725                             .0321
    .750                                             .1530   .0529
    .760                     .0375
    .775                             .2280   .0971
    .789             .0510
    .818                     .1064
    .824   -.0089
    .833             .0295
    .850                            -.0574  -.0698  -.0752
    .857                    -.0454
    .862                                                             -.2647
    .865    .1305
    .879            -.0541
    .900   -.0599                   -.1106                   -.1131
    .905                    -.1012
    .913            -.1047
    .930                            -.0909  -.0755  -.0773
    .944                    -.0841
    [illegible]     -.0[illegible]
    .965   -.0018
   1.000                    -.0074          -.0086           -.0124
ALPHA ( 3)      3.[illegible]    BETA  ( 5) =    8.292   MACH   =  .59674    Q      =  594.79    P      =  2366.0    RN/L   =  4.5533

 SECTION ( 1)LEFT WING BOT SURF              DEPENDENT VARIABLE CP

2Y/BW        .2990   .3340   .4270   .5340    6730   .7800   .8870   .9720

  X/CW
   [illegible]  -.3916  -.3754   .0791   .2716   .2354   .2690   .2446
   [illegible]   .1000  -.1395   .1859   .1799   .1900   .1857   .1751  -.6066
   [illegible]          -.1312   .187[illegible]
   [illegible]  -.1316                   .1115   .1172   .1041   .0987
   [illegible]                                                           -.4721
   [illegible]                           .0748
```

DATE 10 FEB 76　　　TABULATED PRESSURE DAT　　JA148 (AMES 11-073-[illegible])　　

AMES 11-C [illegible] -140A/B/C/R ORB LEFT WING BOT　　(XEBL42)

ALPHA (3) = 3.995　BETA (5) = 8.292

SECTION (1)LEFT WING BOT SURF　　[illegible] [illegible]BLE CP

2Y/BW	.2990	.3640	.4270	.5340	[illegible]	[illegible]	.8870	.9720
X/CW								
.081			.1168					
.086		.0664						
.094	-.0695							
.150				.0497	[illegible]	.633	.0008	
.157								-.2992
.163		.1472						
.177			.0715					
.229	.0095							
.246		.0433						
.260				.0335	.0346	.0252	-.0219	
.274			.0453					
.345								-.2352
.390		.0421						
.400				.0169	.0203		-.0279	
.422			.0308					
.433								-.2500
.500				-.0187	-.0112			
.565			-.2822					
.600							-.0338	
.637		-.0276						
.650						.0035		
.670								-.2045
.700					.0055			
.725				.0328				
.750						.1284	.0342	
.760			.0446					
.775				.2055	.0812			
.793		.0521						
.809			.1061					
.834	-.0026							
.839		.0299						
.850				-.0533	-.0844	-.0820		
.857			-.0399					
.862								-.2839
.865	.1435							
.873		-.0452						
[illegible]	-.0424			-.1096			-.1335	
.905			-.0924					
.919		-.0979						
[illegible]				-.0927	-.0856	-.0999		
[illegible]			-.0596					
[illegible]		-.0906						
[illegible]	-.[illegible]14							
[illegible]			.0057		-.0508		-.0399	

C 5

AMES 11-073(OA148) -140A/B/C/F ORB LEFT WING BOT (XEBL42)

ALPHA (1) = 7.905 BETA (1) = -7.888 MACH = .59644 Q = 594.20 P = 2386.1 RN/L = 4.8802

SECTION (1)LEFT WING BOT SURF DEPENDENT VARIABLE CP

2Y/BW	.2990	.3540	.4270	.5340	.6730	.7800	.8870	.9720
X/CW								
.010	-.0258	-.0966	.3962	.5112	.5304	.5894	.5530	
.020	.0000	.0930	.4456	.3851	.4527	.4885	.4974	-.3654
.040		.1601	.3443					
.050	.1012			.2684	.3257	.3543	.3702	
.063								-.1814
.080				.2166				
.081			.2317					
.086		.2694						
.094	.1143							
.150				.1842	.2150	.2359	.2076	
.157								-.1648
.163		.2682						
.177			.1723					
.223	.1459							
.246		.1471						
.250				.1581	.1691	.1730	.1472	
.274			.1437					
.345								-.0268
.390		.1306						
.400				.1172	.1319		.1091	
.402			.1261					
.503								-.0647
.550				.0635	.0745			
.565			-.3150					
.600							.0643	
.637		.0282						
.640						.0868		
.670								-.0335
.700					.0724			
[illegible]				.0989				
.750						.2208	.1256	
.760			.0843					
.775				.2687	.1609			
.798		.0979						
.808			.1559					
[illegible]	.0286							
.833		.0689						
.850				-.0034	-.0103	-.0311		
.857			.0040					
.862								-.2445
.865	.1963							
.873		-.0227						
[illegible]	-.0450			-.0640			-.1060	
.905			-.0616					
.919		-.0555						

```
                          AMES 11-073(OA148) -140A/B/C/R ORB LEFT WING BOT                     (XEBL42)
ALPHA ( 4) =    7.905   BETA  ( 1) =   -7.898
 SECTION ( 1)LEFT WING BOT SURF               DEPENDENT VARIABLE CP
2Y/BW       .2990   .3640   .4270   .5340   .6730   .7800   .8870   .9720
  X/CW
   .950
   .953                            -.0493  -.0244  -.0654
   .955                    -.0284
   .965            -.0449
  1.000     -.0212
                            .0494           .0236           -.1188
ALPHA ( 4) =    7.915   BETA  ( 2) =   -3.855   MACH   =  .59644    Q     =  594.20    P     =  2386.1    RN/L   =  4.8802
 SECTION ( 1)LEFT WING BOT SURF               DEPENDENT VARIABLE CP
2Y/BW       .2990   .3640   .4270   .5340   .6730   .7800   .8870   .9720
  X/CW
   .010     -.1818  -.3196   .2713   .4969   .4952   .5222   .4627
   .020      .0000  -.0481   .3792   .3879   .4404   .4591   .4487  -.5885
   .040              .0345   .3404
   .050      .0313
   .069                              .2819   .3194   .3461   .3475
   .080                                                              -.3524
   .091                              .2280
   .086                      .2405
   .094              .2224
   .150      .0679
   .157                              .1767   .2183   .2269   .1803
   .163                                                              -.2188
   .177              .2715
   .229                      .1735
   .246      .1281
   .250              .1506
   .274                              .1561   .1643   .1603   .1246
   .345                      .1453
   .390                                                              -.1073
   .430              .1318
   .452                              .1178   .1233           .0851
   .503                      .1232
   .550                                                              -.1325
   .565                              .0567   .0637
   .600                     -.2855
   .637                                                      .0438
   .650              .0312
   .670                                              .0707
   .700                                                              -.0920
   .725                                      .0630
   .750                              .0895
   .760                      .0816                   .2002   .1054
```

AMES 11-073(OA148) -.40A/B/C/R ORB LEFT WING BOT (XE8L42)

ALPHA (4) = 7.915 BETA (2) = -3.855

SECTION (1)LEFT WING BOT SURF DEPENDENT VARIABLE CP

2Y/BW	.2990	.3640	.4270	.5340	.6730	.7000	.8870	.9720
X/CW								
.775				.2684	.1467			
.798		.0931						
.808			.1559					
.934	.0269							
.839		.0644						
.850				-.0177	-.0270	-.0443		
.857			-.0032					
.662								-.2754
.865	.1843							
.879		-.0239						
.900	-.0372			-.0807			-.1190	
.905			-.0718					
.919		-.0598						
.950				-.0707	-.0407	-.0788		
.953			-.0428					
.955		-.0521						
.955	-.0260							
1.000			.0377		.0003		-.1133	

ALPHA (4) = 8.038 BETA (3) = .180 MACH = .59644 Q = 594.20 P = 2386.1 RN/L = 4.8802

SECTION (1)LEFT WING BOT SURF DEPENDENT VARIABLE CP

2Y/BW	.2990	.3640	.4270	.5340	.6730	.7800	.8870	.9720
X/CW								
.010	-.3808	-.5687	.0961	.4563	.4404	.4267	.3581	
.020	.0000	-.2165	.2790	.3860	.4053	.4127	.3782	-.8235
.040		-.1199	.3161					
.050	-.0550			.2893	.3119	.3156	.2993	
.069								-.5153
.080				.2327				
.081			.2377					
.086		.1497						
.134	.0093							
.150				.1772	.2057	.2118	.1486	
.157								-.2869
.163		.2524						
.177			.1747					
[illegible]	.0911							
[illegible]		.1436						
[illegible]				.1456	.1499	.1436	.0925	
[illegible]			.1408					
.345								-.1887
.330		.1304						

```
                                   AMES 11-073(OA148) -140A/B/C/R ORB LEFT WING BOT            (XE8L42)
ALPHA ( 4) =    8.038    BETA  ( 3) =     .180
 SECTION ( 1)LEFT WING BOT SURF                  DEPENDENT VARIABLE CP
2Y/BW        .2390   .3640   .4270   .5340   .6730   .7800   .8870   .9720
  X/CW
   .400                              .1073   .1101           .0570
   .402                      .1185
   .503
   .550                              .0519   .0552                   -.2079
   .565                     -.2682
   .600
   .637              .0253                                   .0144
   .650                                              .0559
   .670
   .700                                                              -.1450
   .725                                      .0533
   .740                              .0804
   .760                                              .1802   .0792
   .775                      .0736
   .788                              .2646   .1306
   .800              .0915
   .834      .0275           .1527
   .840              .0705
   .850                             -.0217  -.0448  -.0525
   .857                     -.0069
   .862
   .865      .1815                                                   -.3019
   .879             -.0223
   .900     -.0292                  -.0839                   -.1355
   .905                     -.0730
   .919             -.0716
   .950                             -.0744  -.0665  -.0925
   .953                     -.0452
   .955             -.0562
   .965     -.0382
  1.000                      .0413           -.0293          -.1345
ALPHA ( 4) =    8.035    BETA  ( 4) =    4.244   MACH   =  .59644     Q      =  594.20     P      =  2386.1     RN/L   =  4.3902
 SECTION ( 1)LEFT WING BOT SURF                  DEPENDENT VARIABLE CP
2Y/BW        .2990   .3640   .4270   .5340   .6730   .7800   .8870   .9720
  X/CW
   .010     -.5719  -.7207  -.0911   .3820   .3744   .3098   .2321
   .020      .0000  -.3584   .1479   .3532   .3640   .3546   .2994 -1.0962
   .040             -.2525   .2616
   .050     -.1524                   .2760   .2979   .2922   .2594
   .059                                                              -.7317
   .080                              .2217
```

AMES 11-073(OA148) -140A/B/C/R ORB LEFT WING BOT (XE8L42)

ALPHA (4) = 8.035 BETA (4) = 4.244

SECTION (1)LEFT WING BOT SURF DEPENDENT VARIABLE CP

2Y/BW	.2990	.3640	.4270	.5340	.6730	.7800	.8870	.9720
X/CW								
.081			.2193					
.085		.0634						
.094	-.0651							
.150				.1650	.1913	.1983	.1193	
.157								-.3611
.163		.2162						
.177			.1627					
.229	.0467							
.246		.1244						
.250				.1320	.1369	.1305	.0691	
.274			.1299					
.345								-.2858
.390		.1166						
.400				.0951	.0982		.0300	
.402			.1042					
.503								-.2817
.550				.0436	.0469			
.565			-.2768					
.600							-.0037	
.637		.0194						
.650						.0456		
.670								-.1977
.700					.0441			
.725				.0714				
.750						.1591	.0612	
.760			.0775					
.775				.2523	.1150			
.798		.0876						
.800			.1408					
.834	.0220							
.843		.0618						
.850				-.0203	-.0593	-.0671		
.857			-.0150					
.863								-.3308
.865	.1737							
.893		-.0198						
.900	-.0302			-.0794			-.1501	
.905			-.0634					
.913		-.0726						
.950				-.0566	-.0608	-.1085		
.953			-.0483					
.955		-.0653						
.965	-.0392							
1.000			.0267		-.0026		-.1681	

AMES 11-073(OA148) -140A/B/C/R ORB LEFT WING BOT (XE8L42)

ALPHA (4) = 8.035 BETA (5) = 8.296 MACH = .59644 Q = 594.20 P = 2386.1 RN/L = 4.8802

SECTION (1)LEFT WING BOT SURF DEPENDENT VARIABLE CP

2Y/BW	.2990	.3640	.4270	.5340	.6730	.7800	.8870	.9720
X/CW								
.010	-.7729	-.6680	-.3071	.2762	.2751	.1591	.0806	
.020	.0000	-.4414	-.0213	.3004	.2943	.2772	.2005	-1.3558
.040		-.3433	.1867					
.050	-.2604			.2536	.2698	.2461	.2005	
.069								-.9063
.080				.2012				
.081			.1915					
.086		-.0147						
.094	-.1396							
.150				.1513	.17	.1783	.0829	
.157								-.4360
.163		.1739						
.177			.1553					
.229	.0092							
.245		.1037						
.250				.1157	.1210	.1139	.0377	
.274			.1192					
.345								-.3763
.300		.1063						
.400				.0817	.0902		.0058	
.402			.0926					
.503								-.3539
.550				.0375	.0383			
.565			-.3278					
.600							-.0273	
.637		.0179						
.650						.0220		
.670								-.2492
.700					.0265			
.725				.0586				
.750						.1303	.0228	
.760			.0724					
.775				.2379	.0956			
.798		.0806						
.809			.1318					
.834	.0218							
.839		.0529						
.850				-.0242	-.0655	-.0745		
.857			-.0149					
.862								-.3634
.865	.1740							
.879		-.0151						
.900	-.0214			-.0878			-.1698	
.905			-.0727					
.919		-.0738						

REPRODUCIBILITY OF THE ORIGINAL PAGE IS POOR

DATE 10 FEB 76 TABULATED PRESSURE DATA - OA148 (AMES 11-073-1)

AMES 11-073(OA148) -140A/B/C/R ORB LEFT WING BOT (XEBL42)

ALPHA (4) = 8.035 BETA (5) = 8.296

SECTION (1)LEFT WING BOT SURF DEPENDENT VARIABLE CP

2Y/BW	.2990	.3640	.4270	.5340	.6730	.7800	.8870	.9720
X/CW								
.950				-.0631	-.0579	-.1191		
.953			-.0596					
.955		-.0757						
.965	-.0311							
1.000			.0089		-.0142		-.2034	

ALPHA (5) = 11.910 BETA (1) = -7.853 MACH = .59658 Q = 594.43 P = 2385.8 RN/L = 4.8825

SECTION (1)LEFT WING BOT SURF DEPENDENT VARIABLE CP

2Y/BW	.2990	.3640	.4270	.5340	.6730	.7800	.8870	.9720
X/CW								
.010	-.3176	-.6977	.0912	.5991	.5984	.4827	.4050	
.020	.0000	-.1892	.3675	.5833	.6070	.5930	.5312	-.9204
.040		-.0518	.4659					
.050	.0551			.4804	.5293	.5286	.5043	
.069								-.4739
.080				.4120				
.081			.3927					
.095		.2732						
[illegible]	.1238							
.150				.3324	.3741	.3875	.3225	
.157								-.2386
.163		.3839						
.177			.3081					
[illegible]	.2026							
[illegible]		.2758						
[illegible]				.2776	.2915	.2931	.2449	
[illegible]			.2608					
[illegible]								-.0723
[illegible]		.2382						
.400				.2120	.2260		.1766	
.402			.2190					
[illegible]								-.097
[illegible]				.1389	.1467			
[illegible]			-.3217					
[illegible]							.1050	
[illegible]		.1051						
[illegible]						.1311		
[illegible]								-.0421
[illegible]					.1167			
.725				.1410				
.750						.2469	.1529	
.760			.1235					

```
                              AMES 11-073(OA148) -140A/B/C/R ORB LEFT WING BOT              (XE8L42)
ALPHA ( 5) =    11.910    BETA  ( 1) =   -7.853
 SECTION ( 1)LEFT WING BOT SURF               DEPENDENT VARIABLE CP

2Y/BW        .2990   .3540   .4270   .5340   .6730   .7800   .8870   .9720

  X/CW
    .775                             .3109   .1936
    .793             .1347
    .808                     .2017
    .834     .0677
    .839             .1112
    .850                             .0327   .0170  -.0055
    .857                     .0430
    .862                                                            -.2810
    .865     .2280
    .873             .0185
    .900    -.0014                  -.0337                  -.1190
    .905                    -.0221
    .919            -.0311
    .950                            -.0253  -.0151  -.0824
    .953                    -.0007
    [illegible]     -.0210
    [illegible] -.0033
   1.000                     .0720           .0273           -.2732
ALPHA ( 5) =   11.930    BETA  ( 2) =   -3.836   MACH   =  .59658    Q     =  594.43    P     =  2385.8    RN/L   =  4.8825
 SECTION ( 1)LEFT WING BOT SURF               DEPENDENT VARIABLE CP

2Y/BW        .2990   .3640   .4270   .5340   .6730   .7800   .8870   .9720

  X/CW
    .010    -.5511  -.9299  -.1238   .4947   .4891   .3388   .2511
    .020     .0000  -.3642   .2230   .5279   .5406   .5120   .4272 -1.1598
    .040            -.2131   .4109
    .050    -.0491                   .4554   .4959   .4852   .4451
    .069                                                            -.6808
    .080                             .3921
    .081                     .3710
    .086             .1805
    .094     .0519
    .150                             .3169   .3514   .3638   .2840
    .157                                                            -.3125
    .163             .3519
    .177                     .2986
    .229     .1648
    .246             .2589
    .250                             .2684   .2750   .2698   .2114
    .274                     .2513
    .345                                                            -.1706
    .390             .2291
```

```
                         AMES 11-073(OA148) -140A/B/C/R ORB LEFT WING BOT          (XEBL42)

ALPHA ( 5) =   11.930    BETA  ( 2) =   -3.836

 SECTION ( 1)LEFT WING BOT SURF            DEPENDENT VARIABLE CP

2Y/BW       .2990    .3640    .4270    .5340    .6730    .7800    .8870    .9720

  X/CW
   .400                               .2026    .2111             .1464
   .402                      .2098
   .503                                                                   -.1864
   .550                               .1271    .1335
   .565                     -.2858
   .600                                                          .0747
   .637             .0993
   .650                                                 .1150
   .670                                                                   -.1044
   .700                                        .1031
   .725                               .1328
   .750                                                 .2234    .1255
   .760                      .1226
   .775                               .3154    .1786
   .788             .1350
   .808                      .1946
   .834    .0675
   .839             .1097
   .850                               .0291   -.0002   -.0239
   .857                      .0381
   .862                                                                   -.3183
   .865    .2300
   .879             .0165
   .900   -.0058                     -.0420                     -.1448
   .905                     -.0308
   .919            -.0368
   .950                              -.0263   -.0143   -.0976
   .953                     -.0120
   .955            -.0290
   .965   -.0186
  1.000                      .0680             .0250            -.3009
ALPHA ( 5) =   11.965    BETA  ( 3) =      .177   MACH   =  .59658    Q     =  594.43     P     =  2385.8    RN/L   =  4.8825

 SECTION ( 1)LEFT WING BOT SURF            DEPENDENT VARIABLE CP

2Y/BW       .2990    .3640    .4270    .5340    .6730    .7800    .8870    .9720

  X/CW
   .010   -.7951  -1.1505   -.3746    .3696    .3734    .1659    .0861
   .020    .0000   -.5437    .0364    .4548    .4579    .4165    .3146  -1.3800
   .040            -.3824    .3285
   .050   -.1735                      .4217    .4491    .4278    .3696
   .069                                                                  -.8503
   .080                               .3657
```

AMES 11-073(OA148) -140A/B/C/R ORB LEFT WING BOT (XEBL42)

ALPHA (5) = 11.956 BETA (3) = .177

SECTION (1)LEFT WING BOT SURF DEPENDENT VARIABLE CP

2Y/BW	.2990	.3540	.4270	.5340	.5730	.7800	.8870	.9720
X/CW								
.081			.3357					
.085		.0826						
.094	-.0354							
.150				.2974	.3275	.3270	.2337	
.157								-.3736
.163		.3087						
.177			.2812					
.210	.1109							
.246		.2354						
.250				.2527	.2533	.2485	.1671	
.274			.2394					
.345								-.2559
.390		.2217						
.400				.1880	.1633		.1081	
.462			.1985					
.503								-.2683
.550				.1214	.1211			
.585			-.2352					
.600							.0510	
.637		.0932						
.650						.0956		
.670								-.1601
.700					.0874			
.725				.1197				
.750						.1973	.0965	
.760			.1179					
.775				.3028	.1555			
.798		.1295						
.809			.1911					
.834	.0548							
.839		.1039						
.850				.0191	-.0191	-.0362		
.857			.0269					
.862								-.3448
.865	.2240							
.879		.0135						
.900	.0045			-.0548			-.1600	
.905			-.0358					
.913		-.0440						
.950				-.0427	-.0375	-.1096		
[illegible]			-.0219					
[illegible]		-.0419						
.955	-.0173							
1.000			.0193		-.0002		-.2883	

AMES 11-073(OA148) -140A/B/C/R ORB LEFT WING BOT (XEBL42)

ALPHA (5) = 11.976 BETA (4) = 4.252 MACH = .59658 Q = 594.43 P = 2385.8 RN/L = 4.8825

SECTION (1)LEFT WING BOT SURF DEPENDENT VARIABLE CP

2Y/BW	.2990	.3640	.4270	.5340	.6730	.7800	.8870	.9720
X/CW								
.010	-.9947	-.9710	-.5833	.2239	.2231	-.0262	-.1109	
.020	.0000	-.6175	-.1387	.3611	.3531	.3024	.1770	-1.5742
.040		-.4769	.2239					
.050	-.2930			.3680	.3872	.3577	.2916	
.069								-1.0247
.080				.3200				
.081			.2844					
.085		-.0132						
.094	-.1266							
.150				.2625	.2936	.2923	.1940	
.157								-.4434
.163		.2478						
.177			.2561					
.229	.0577							
.246		.1993						
.250				.2249	.2239	.2192	.1342	
.274			.2161					
.345								-.3275
.390		.2028						
.400				.1668	.1707		.0733	
.402			.1718					
.503								-.3337
.550				.1011	.1032			
.565			-.2811					
.600							.0269	
.637		.0881						
.650						.0785		
.670								-.2224
.700					.0709			
.725				.1025				
.750						.1707	.0696	
.760			.1077					
.775				.2891	.1321			
.792		.1176						
.808			.1737					
.824	.0601							
.839		.1018						
.850				.0065	-.0351	-.0484		
.857			0175					
.862								-.3563
.865	.2199							
.873		.0134						
.890	.0009			-.0662			-.1627	
.905			-.0447					
.919		-.0458						

```
                                        AMES 11-073(OA148) -140A/B/C/R ORB LEFT WING BOT                (XE8L+2)

ALPHA ( 5) =   11.976    BETA  ( 4) =    4.252

 SECTION ( 1)LEFT WING BOT SURF              DEPENDENT VARIABLE CP

2Y/BW        .2990   .3540   .4270   .5340   .6730   .7800   .8870   .9720

  X/CW
    .950                            -.0627  -.0461  -.1196
    .953                    -.0390
    .955             0541
    .965   -.015
   1.000                     .0203           -.0190          -.2480

ALPHA ( 5) =   12.034    BETA  ( 5) =    8.318   MACH   =  .59658     Q      =  594.43     P      =  2385.2     FN/L   =  4.8825

 SECTION ( 1)LEFT WING BOT SURF              DEPENDENT VARIABLE CP

2Y/BW        .2990   .3540   .4270   .5340   .6730   .7800   .8870   .9720

  X/CW
    .010  -1.2548  -.7467  -.8264   .0372   .0532  -.2563  -.3180
    .020    .0000  -.6698  -.3435   .2426   .2332   .1686   .0340 -1.7540
    .040           -.5595   .1242
    .050   -.4379                   .3039   .3235   .2891   .1935
    .069                                                           -1.1787
    .080                            .2789
    .081                    .2358
    .086           -.1023
    .094   -.2326
    .150                            .2294   .2613   .2548   .1542
    .157                                                            -.5034
    .163            .1885
    .177                    .2348
    .229    .0048
    .246            .1622
    .250                            .2037   .2110   .1925   .1008
    .274                    .1975
    .345                                                            -.4089
    .390            .1804
    .400                            .1514   .1548           .0435
    402                     .1551
    .503                                                            -.399F
    .550                            .0979   .0889
    .565                   -.3174
    .600                                                    .0002
    .637            .0775
    .650                                            .0635
    .670                                                            -.2541
    .700                                    .0583
    .725                            .1007
    .750                                            .1381   .0418
    .760                    .1038
```

```
                                AMES 11-073(OA148) -140A/B/C/R ORB LEFT WING BOT          (XEBL42)

ALPHA ( 5) =   12.034    BETA  ( 5) =    8.318

 SECTION ( 1)LEFT WING BOT SURF            DEPENDENT VARIABLE CP

2Y/BW       .2990   .3640   .4270   .5340   .6730   .7800   .8870   .9720

  X/CW
    .775                            .2724   .1106
    .798            .1154
    .808                    .1658
    .834    .0639
    .839            .0928
    .850                           -.0021  -.0539  -.0577
    .857                    .0146
    .862                                                           -.3467
    .865    .2246
    .879            .0141
    .900    .0162                  -.0752                  -.1681
    .905                   -.0534
    .919           -.0508
    .950                           -.0835  -.0734  -.1293
    .953                   -.0479
    .955           -.0517
    .965   -.0052
   1.000                   -.0001          -.0868          -.2069
```

```
DATE 10 FEB 76            TABULATED PRESSURE DATA - OA148 ( AMES 11-073-1 )                                    PAGE 2218

                                  AMES 11-073(OA148) -140A/B/C/R ORB LEFT WING BOT            (XEBL43)   ( 05 AUG 75  )

              REFERENCE DATA                                                                       PARAMETRIC DATA

SREF  =  2690.0000 SQ.FT.   XMRP  =  1076.6800 IN. XO                           RUDDER =     .000  SPDBRK =   55.000
LREF  =   474.8000 IN.      YMRP  =      .0000 IN. YO                           BDFLAP =   22.500  L-ELVN =   10.000
BREF  =   936.0680 IN.      ZMRP  =   375.0000 IN. ZO                           R-ELVN =   10.000  MACH   =     .900
SCALE =      .0300

ALPHA ( 1) =   -4.070   BETA  ( 1) =   -3.850  MACH   =  .89793   Q    =  598.79   P    =  1060.9   RN/L   =  3.6697

 SECTION ( 1)LEFT WING BOT SURF            DEPENDENT VARIABLE CP

2Y/BW        .2990   .3640   .4270   .5340   .6730   .7800   .8870   .9720

 X/CW
   .010     -.1376  -.3030  -.5022 -1.0964 -1.2603 -1.0286 -1.0403
   .020      .0000  -.2572  -.5382 -1.2750 -1.3210 -1.3359  -.9535  -.5518
   .040             -.2289  -.6638
   .050     -.1357                 -1.1726 -1.3200 -1.3557  -.9661
   .069                                                             -.4697
   .080                            -1.0656
   .081                     -.4820
   .086             -.1193
   .094     -.1225
   .150                             -.6229 -1.1444 -1.2462  -.8763
   .157                                                             -.3146
   .163             -.1753
   .177                     -.4766
   .229     -.0577
   .246             -.3175
   .250                             -.3788  -.4232  -.6118  -.7572
   .274                     -.3656
   .345                                                             -.3339
   .390             -.3182
   .400                             -.2007  -.1567          -.4925
   .402                     -.2168
   .503                                                             -.2749
   .550                             -.2133  -.1781
   .565                     -.7856
   .600                                                     -.2282
   .637             -.2142
   .650                                             -.0561
   .670                                                             -.2004
   .700                                     -.0436
   .725                             -.0143
   .750                                              .1538  -.1103
   .760                      .0036
   .775                              .1637   .0785
   .798              .0086
   .808                      .1171
   .834     -.0622
   .839              .0121
   .850                             -.1158  -.1370  -.1145
```

```
DATE 10 FEB 76             TABULATED PRESSURE DATA - OA148 ( AMES 11-073-1 )

                                     AMES 11-073(OA148) -140A/B/C/R ORB LEFT WING BOT                  (XEBL43)

ALPHA ( 1) =    -4.070    BETA  ( 1) =    -3.050

 SECTION ( 1)LEFT WING BOT SURF                DEPENDENT VARIABLE CP

2Y/BW        .2990   .3640   .4270   .5340   .6730   .7800   .8870   .9720

  X/CW
    .857                     -.1203
    .852                                                             -.1361
    .865      .1053
    .879             -.1370
    .900     -.1572                  -.1912                  -.0712
    .905                     -.2135
    .919             -.1798
    .950                             -.1298  -.1282  -.1174
    .953                     -.1120
    .955             -.1008
    .965     -.0803
   1.000                      .0434          -.0199          -.0050

ALPHA ( 1) =    -4.069    BETA  ( 2) =     .187   MACH   =  .89793    Q      =  598.79     P      =  1060.9     RN/L   =  3.6537

 SECTION ( 1)LEFT WING BOT SURF                DEPENDENT VARIABLE CP

2Y/BW        .2990   .3640   .4270   .5340   .6730   .7800   .8870   .9720

  X/CW
    .010     -.0481  -.1293  -.3324 -1.0822 -1.2853 -1.0722 -1.0723
    .020      .0000  -.0994  -.3773 -1.2505 -1.3418 -1.3658  -.9637  -.4838
    .040             -.0814  -.4736
    .050     -.0636                 -1.1241 -1.2738 -1.2899  -.8886
    .069                                                             -.4471
    .080                             -.6852
    .081                     -.3903
    .086             -.0317
    .094     -.0605
    .150                             -.5133  -.6557  -.9497  -.7722
    .157                                                             -.3098
    .163             -.0954
    .177                     -.4022
    .229     -.0162
    .246             -.2511
    .250                             -.3527  -.3633  -.6068  -.6686
    .274                     -.3144
    .345                                                             -.3093
    .390             -.2759
    .400                             -.2264  -.2159          -.5092
    .402                     -.2174
    .503                                                             -.2615
    .540                             -.2290  -.2005
    .565                     -.7294
    .600                                                     -.2438
```

```
                    AMES 11-073(OA148) -140A/B/C/R ORB LEFT WING BOT          (XEBL43)

ALPHA ( 1) =   -4.069   BETA (  ) =    .187

 SECTION ( 1)LEFT WING BOT SURF            DEPENDENT VARIABLE CP

2Y/BW        .2990   .3640   .4270   .5340   .6730   .7800   .8870   .9720

 X/CW
  .637              -.2328
  .650                                              -.0757
  .670                                                              -.2003
  .700                                      -.0459
  .725                              -.0190
  .750                                               .1405  -.0942
  .760                      -.0027
  .775                               .1893   .0827
  .798               .0084
  .808                       .1111
  .834      -.0693
  .839               .0243
  .850                              -.1363  -.1736  -.1679
  .857                      -.1248
  .862                                                              -.1420
  .865       .1099
  .879              -.1331
  .900      -.1515                  -.2449                  -.0902
  .905                      -.2391
  .919              -.2054
  .950                              -.1934  -.1862  -.1739
  .953                      -.1506
  .955              -.1274
  .965      -.0811
 1.000                      -.0245          -.0652          -.0522
ALPHA ( 1) =   -4.078   BETA ( 3) =   4.272  MACH  =  .89793   Q   =  598.79   P   =  1060.9   RN/L  =  3.5E97
 SECTION ( 1)LEFT WING BOT SURF            DEPENDENT VARIABLE CP

2Y/BW        .2990   .3640   .4270   .5340   .6730   .7800   .8870   .9720

 X/CW
  .010       .0019  -.0061  -.1623 -1.0463 -1.2860 -1.0971  -.8364
  .020       .0000   .0029  -.2225 -1.1035 -1.3006 -1.1265  -.8179  -.4897
  .040               .0173  -.3176
  .050      -.0145                  -.7043 -1.2323 -1.1057  -.8110
  .059                                                              -.4428
  .080                              -.5309
  .091                      -.3121
  .086               .0332
  .094      -.0192
  .150                              -.4184  -.4948  -.8910  -.7684
  .157                                                              -.2911
  .163              -.0355
```

```
DATE 10 FEB 76              TABULATED PRESSURE DATA - OA148 ( AMES 11-073-1 )                                    PAGE 2221

                                  AMES 11-073(OA148) -140A/B/C/R ORB LEFT WING ..                        (XEBL43)

ALPHA ( 1) =   -4.078   BETA  ( 3) =   4.272

 SECTION ( 1)LEFT WING BOT SURF             DEPENDENT VARIABLE CP

2Y/BW     .2990   .3640   .4270   .5340   .6730   .7800   .8870   .9720

  X/CW
   .177                   -.3142
   .229   .0159
   .246           -.2039
   .250                           -.3103  -.3290  -.5193  -.6833
   .274                   -.2777
   .345                                                           -.2868
   .390           -.2362
   .400                           -.2299  -.2467          -.4693
   .402                   -.1950
   .503                                                           -.2326
   .550                           -.2506  -.1903
   .565                   -.7859
   .600                                                   -.1733
   .637           -.2487
   .650                                           -.0697
   .670                                                           -.2218
   .700                                   -.0435
   .725                           -.0250
   .750                                            .1758  -.0074
   .760                   -.0059
   .775                            .2291   .0841
   .798           -.0029
   .808                    .0979
   .834  -.0700
   .839            .0231
   .850                           -.1448  -.1812  -.2048
   .857                   -.1185
   .862                                                           -.1738
   .865   .0821
   .879           -.1209
   .900  -.1310                   -.2930                  -.1536
   .905                   -.2372
   .919           -.2000
   .950                           -.2463  -.2538  -.2482
   .953                   -.1898
   .955           -.1522
   .965  -.0904
  1.000                   -.1035          -.1288          -.0994
```

AMES 11-073(OA148) -140A/B/C/R ORB LEFT WING BOT (XEBL43)

ALPHA (2) = -.029 BETA (1) = -3.865 MACH = .89677 Q = 597.91 P = 1062.1 RN/L = 3.6486

SECTION (1)LEFT WING BOT SURF DEPENDENT VARIABLE CP

2Y/BW X/CW	.2990	.3640	.4270	.5340	.6730	.7800	.8870	.9720
.010	.0361	.0789	.0979	-.6596	-.8211	-.7582	-.6200	
.020	.0000	.0671	-.0132	-.6164	-.7513	-.7514	-.8623	-.2741
.040		.0723	-.1738					
.050	.0005			-.5280	-.5912	-.6506	-.7235	
.069								-.3075
.080				-.3565				
.081			-.2044					
.086		.0882						
.094	-.0117							
.150				-.2082	-.2189	-.2344	-.2347	
.157								-.2359
.163		.0156						
.177			-.1792					
.223	.0256							
.246		-.1350						
.250				-.1450	-.1880	-.2081	-.2309	
.274			-.1192					
.345								-.1628
.390		-.0970						
.400				-.1103	-.1100		-.1453	
.402			-.0810					
.503								-.1263
.550				-.1500	-.1332			
.565			-.8773					
.600							-.0521	
.637		-.1490						
.650						-.0290		
.670								-.1032
.700					-.0070			
.725				.0085				
.750						.2226	.0930	
.760			.0215					
.775				.2586	.1391			
.798		.0434						
.808			.1510					
.834	-.0330							
.839		.0612						
.850				-.1043	-.1268	-.1644		
.857			-.1066					
.862								-.2188
.865	.1766							
.879		-.1263						
.900	-.1524			-.1988			-.2103	
.905			-.2165					
.919		-.1869						

```
DATE 10 FEB 76              TABULATED PRESSURE DATA - OA148 ( AMES 11-073-1 )

                                  AMES 11-073(OA148) -140A/B/C/R ORB LEFT WING BOT                 (XE8L43)

ALPHA ( 2) =    -.029    BETA  ( 1) =   -3.865

 SECTION ( 1)LEFT WING BOT SURF             DEPENDENT VARIABLE CP

2Y/BW        .2990   .3640   .4270   .5340   .6730   .7800   .8870   .9720

  X/CW
   .950                              -.1325  -.1126  -.1009
   .953                      -.1088
   .955              -.1030
   .965     -.0767
  1.000                       .0447           .0022           .0797
ALPHA ( 2) =    -.015    BETA  ( 2) =     .186   MACH   =  .89677     Q      =  597.91     P      =  1062.1      RN/L   =  3.6486

 SECTION ( 1)LEFT WING BOT SURF             DEPENDENT VARIABLE CP

2Y/BW        .2990   .3640   .4270   .5340   .6730   .7800   .8870   .9720

  X/CW
   .010      .0284   .1061   .1792  -.4712  -.6551  -.6902  -.6067
   .020      .0000   .1061   .0951  -.4743  -.5696  -.6055  -.7402  -.2644
   .040              .1210  -.0574
   .050      .0145                  -.3589  -.4608  -.5229  -.6156
   .069                                                             -.3016
   .080                              -.2811
   .091                      -.1232
   .096              .1293
   .094      .0119
   .150                              -.1788  -.1915  -.2293  -.2577
   .157                                                             -.2392
   .163              .0743
   .177                      -.1358
   .229      .0456
   .246             -.0905
   .250                              -.1304  -.1682  -.2055  -.2273
   .274                      -.1078
   .345                                                             -.1747
   .300             -.0806
   .400                              -.1157  -.1226          -.1611
   .402                      -.0782
   .503                                                             -.1278
   .550                              -.1515  -.1442
   .565                      -.8868
   .600                                                     -.0586
   .637             -.1579
   .640                                              -.0389
   .670                                                             -.1233
   .700                                      -.0155
   .725                               .0085
   .750                                               .2144   .0823
   .760                       .0217
```

```
DATE 10 FEB 76              TABULATED PRESSURE DATA - OA148 ( AMES 11-073-1 )

                                  AMES 11-073(OA148) -140A/B/C/R ORB LEFT WING BOT               (XEBL43)
ALPHA ( 2) =     -.015    BETA  ( 2) =      .186

 SECTION ( 1)LEFT WING BOT SURF                    DEPENDENT VARIABLE CP

2Y/BW         .2990    .3640    .4270    .5340    .6730    .7800    .8870    .9720

  X/CW
    .775                                 .2640    .1267
    .798               .0357
    .808                        .1543
    .834     -.0397
    .839               .0646
    .850                                -.1278   -.1606   -.1958
    .857                       -.1121
    .862                                                                    -.2723
    .865      .1596
    .879              -.1203
    .900     -.1395                     -.2606                     -.3476
    .905                       -.2478
    .913              -.2097
    .950                                -.1990   -.1825   -.1844
    .953                       -.1601
    .955              -.1260
    .965     -.0883
   1.000                       -.0342            -.0443            .0012
ALPHA ( 2) =     -.021    BETA  ( 3) =     4.247   MACH   =  .89677     Q     =  597.91     P     =  1062.1     RN/L   =  3.6486
 SECTION ( 1)LEFT WING BOT SURF                    DEPENDENT VARIABLE CP

2Y/BW         .2950    .3640    .4270    .5340    .6730    .7800    .8870    .9720

  X/CW
    .010     -.0036    .0776    .2283   -.2893   -.4890   -.5261   -.4981
    .020      .0000    .0970    .1674   -.3435   -.4072   -.4532   -.5759   -.2406
    .040               .1166    .0237
    .050      .0087                     -.2414   -.3461   -.3729   -.4049
    .069                                                                    -.2800
    .080                                -.2020
    .081                       -.0635
    .086               .1423
    .094      .0147
    .150                                -.1393   -.1555   -.1815   -.2489
    .157                                                                    -.2331
    .163               .1082
    .177                       -.0915
    .229      .0444
    .246              -.0553
    .250                                -.1124   -.1436   -.1748   -.2155
    .274                       -.0787
    .345                                                                    -.1805
    .390              -.0610
```

```
                                 AMES 11-073(OA148) -140A/B/C/R ORB LEFT WING BOT                (XEBL43)
ALPHA ( 2) =    -.021    BETA  ( 3) =    4.247

 SECTION ( 1)LEFT WING BOT SURF                 DEPENDENT VARIABLE CP

2Y/BW        .2990     .3640     .4270     .5340     .6730     .7800     .8870     .9720

  X/CW
   .400                                    -.1058    -.1123              -.1545
   .402                          -.0777
   .503                                                                            -.1316
   .550                                    -.1482    -.1363
   .565                          -.9017
   .600                                                                  -.0639
   .637                -.1478
   .650                                                        -.0413
   .670                                                                            -.1377
   .700                                              -.0162
   .725                                     .0057
   .750                                                         .2158     .0782
   .760                           .0133
   .775                                     .2692     .1197
   .799                 .0250
   .808                           .1399
   .834     -.0427
   .839                 .0493
   .850                                    -.1325    -.1866    -.2047
   .857                          -.1067
   .862                                                                            -.3952
   .865      .1329
   .879                -.1103
   .900     -.1222                         -.2823                        -.3692
   .905                          -.2505
   .919                -.2190
   .950                                    -.2596    -.2907    -.3726
   .953                          -.2027
   .955                -.1614
   .965     -.1047
  1.000                          -.1074              -.1218              -.0938
ALPHA ( 3) =    3.931    BETA  ( 1) =   -3.870   MACH   =  .89677     Q      =  597.91     P      =  1062.1     RN/L   =  3.6364
 SECTION ( 1)LEFT WING BOT SURF                 DEPENDENT VARIABLE CP

2Y/BW        .2990     .3640     .4270     .5340     .6730     .7800     .8870     .9720

  X/CW
   .010      .0237     .1193     .4036     .1212     .0492     .1543     .1766
   .020      .0000     .1676     .3432    -.0014     .0304     .0375     .0261    -.0944
   .040                .1939     .1773
   .050      .0577                         -.0201    -.0265    -.0141    -.0080
   .059                                                                            -.1310
   .080                                    -.0196
```

AMES 11-073(OA148) -140A/B/C/R ORB LEFT WING BOT (XE8L43)

ALPHA (3) = 3.931 BETA (1) = -3.870

SECTION (1)LEFT WING BOT SURF DEPENDENT VARIABLE CP

2Y/BW	.2990	.3640	.4270	.5340	.6730	.7800	.8970	.9720
X/CW								
.081			.0755					
.086		.2302						
.094	.0629							
.150				.0136	.0218	.0135	-.0297	
.157								-.1775
.163		.1944						
.177			.0363					
.229	.1027							
.246		.0458						
.250				.0254	.0008	-.0119	-.0528	
.274			.0336					
.345								-.1151
.390		.0454						
.400				.0107	.0118		-.0440	
.402			.0393					
.503								-.1012
.550				-.0489	-.0482			
.565			-.9417					
.600							-.0321	
.637		-.0605						
.650						-.0100		
.670								-.0433
.700					.0291			
.725				.0533				
.750						.2465	.1238	
.760			.0592					
.775				.3229	.1690			
.798		.0758						
.808			.1884					
.834	-.0030							
.839		.0959						
.850				-.0840	-.1354	-.1665		
.857			-.0715					
.862								-.2666
.865	.2201							
.879		-.0874						
.900	-.1130			-.1781			-.2821	
.905			-.1856					
.919		-.1551						
.950				-.1080	-.0919	-.2138		
.953			-.0807					
.955		-.0761						
.965	-.0490							
1.000			.0650		.0769		-.3819	

DATE 10 FEB 76 TABULATED PRESSURE DATA - OA148 (AMES 11-073-1) PAGE 2227

AMES 11-073(OA148) -140A/B/C/R ORB LEFT WING BOT (XE8L43)

ALPHA (3) = 3.931 BETA (2) = .185 MACH = .89677 Q = 597.91 P = 1062.1 RN/L = 3.6364

SECTION (1)LEFT WING BOT SURF DEPENDENT VARIABLE CP

2Y/BW	.2990	.3640	.4270	.5340	.6730	.7800	.8870	.9720
X/CW								
.010	-.0762	-.0026	.3712	.1995	.1076	.1957	.1913	
.020	.0000	.0957	.3503	.0830	.0739	.0669	.0608	-.2002
.040		.1341	.2116					
.050	.0219			.0506	.0080	.0075	-.0018	
.069								-.2082
.080				.0287				
.081			.1061					
.086		.2167						
.094	.0390							
.150				.0344	.0241	.0113	-.0475	
.157								-.2042
.163		.2177						
.177			.0552					
.229	.0944							
.245		.0668						
.250				.0302	.0016	-.0191	-.0736	
.274			.0433					
.345								-.1603
.399		.0538						
.400				.0042	-.0010		-.0660	
.402			.0362					
.503								-.1430
.550				-.0565	-.0600			
.565			-.9314					
.600							-.0551	
.647		-.0504						
.660						-.0214		
.670								-.0905
.700					.0244			
.725				.0462				
.740						.2347	.0983	
.750			.0552					
.775				.3157	.1643			
.789		.0733						
.808			.1891					
.844	-.0065							
.850		.0879						
.860				-.0963	-.1473	-.1721		
.867			-.0741					
.862								-.3393
.865	.2003							
.879		-.0837						
.900	-.0970			-.2221			-.3187	
.905			-.2043					
.919		-.1808						

```
DATE 10 FEB 76               TABULATED PRESSURE DATA - OA148 ( AMES 11-073-1 )

                                      AMES 11-073(OA148) -140A/B/C/R ORB LEFT WING BOT                (XEBL43)

ALPHA ( 3) =     3.931    BETA  ( 2) =      .185

 SECTION ( 1)LEFT WING BOT SURF                 DEPENDENT VARIABLE CP

2Y/BW        .2990   .3540   .4270   .5340   .6730   .7800   .8870   .9720

  X/CW
   .950                              -.1726  -.1459  -.1839
   .953                      -.1389
   .955              -.1260
   .990      -.0671
  1.000                      -.0241          -.0349          -.3287

ALPHA ( 3) =     3.933    BETA  ( 3) =    4.242   MACH   =  .89677     Q     =  597.91     P     =  1062.1     RN/L   =  3.6364

 SECTION ( 1)LEFT WING BOT SURF                 DEPENDENT VARIABLE CP

2Y/BW          990   .3540   .4270   .5340   .6730   .7800   .8870   .9720

  X/CW
   .010      -.2091  -.1564   .2370   .2566   .1665   .2303   .2232
   .020       .0000  -.0058   .2242   .1503   .1311   .1267   .1053  -.3632
   .040               .0435   .2792
   .050      -.0317                   .0989   .0553   .0501   .0345
   .069                                                              -.3094
   .080                               .0674
   .081                       .1356
   .086               .1752
   .094       .0034
   .150                               .0484   .0388   .0295  -.0404
   .157                                                              -.2500
   .163               .2173
   .177                       .0743
   .229       .0715
   .246               .0775
   .250                               .0364   .0141  -.0018  -.0682
   .274                       .0516
   .345                                                              -.2194
   .330               .0571
   .450                               .0068   .0080          -.0750
   .452                       .0374
   .503                                                              -.1812
   .550                              -.0547  -.0511
   .555                      -.8499
   .600                                                      -.0582
   .647              -.0639
   .680                                              -.0201
   .650                                                              -.1420
   .700                                       .0125
   .725                               .0397
   .750                                               .2166   .0690
   .763                       .0531
```

REPRODUCIBILITY OF THE
ORIGINAL PAGE IS POOR

```
                              AMES 11-073(OA148) -140A/B/C/R ORB LEFT WING BOT                (XEBL43)

ALPHA ( 3) =    3.933   BETA  ( 3) =    4.242

 SECTION ( 1)LEFT WING BOT SURF             DEPENDENT VARIABLE CP

2Y/BW        .2990   .3640   .4270   .5340   .6730   .7800   .8870   .9720

  X/CW
    .775                             .3103   .1351
    .793             .0545
    .808                     .1621
    .834    -.0109
    .838             .0758
    .850                            -.0945  -.1614  -.1776
    .857                    -.0768
    .862                                                            -.4235
    .865     .1799
    .879            -.0721
    .900    -.0823                  -.2369                  -.3203
    .905                    -.2001
    .919            -.1574
[illegible]                         -.2341  -.1904  -.1866
    .953                    -.1837
    .965            -.1233
    .975    -.0546
   1.000                    -.1319          -.0907          -.0987

ALPHA ( 4) =    7.999   BETA  ( 1) =   -3.866   MACH   =  .89613    Q     =  597.48    P     =  1062.9    RN/L   =  3.6207

 SECTION ( 1)LEFT WING BOT SURF             DEPENDENT VARIABLE CP

2Y/BW        .2990   .3540   .4270   .5340   .6730   .7800   .8870   .9720

  X/CW
    .010    -.1720  -.1848   .4103   .5173   .4700   .5285   .4945
    .020     .0000   .0484   .4698   .3988   .4055   .4148   .3937  -.2840
    .040             .1221   .3899
    .050     .0412                   .2935   .2932   .3009   .2851
    .059                                                            -.1823
    .080                             .2393
    .081                     .2833
    .085             .2869
    .094     .0373
    .150                             .2075   .2150   .2127   .1494
    .157                                                            -.1654
    .163             .3304
[illegible]                  .2065
    .219     .1623
    .246             .1946
[illegible]                          .1747   .1644   .1489   .0886
[illegible]                  .1779
[illegible]                                                         -.0517
[illegible]          .1693
```

```
                                   AMES 11-073(OA148) -140A/B/C/R ORB LEFT WING BOT              (XEBL43)
ALPHA ( 4) =    7.998    BETA  ( 1) =   -3.866
 SECTION ( 1)LEFT WING BOT SURF                DEPENDENT VARIABLE CP
2Y/BW       .2990   .3540   .4270   .5340   .6730   .7800   .8870   .9720
  X/CW
    .400
    .402                            .1251   .1227           .0557
    .503                    .1499
    .550                                                            -.0650
    .565                            .0445   .0429
    .600                   -.6767
    .637            .0271                                   .0355
    .650
    .670                                            .0535
    .700                                                            -.0318
    .725                                    .0626
    .750                            .0919
    .760                                            .2903   .1472
    .775                    .0933
    .788                            .3562   .1837
    .803            .1092
    .824                    .2143
    .833    .0300
    .850            .1138
    .857                           -.0653  -.1220  -.1244
    .862                   -.0595
    .865    .2509                                                   -.2636
    .879           -.0704
    .900   -.0952
    .905                           -.2113                  -.2387
    .919                   -.2015
    .930           -.1659
    .953                           -.1942  -.2304  -.2639
    .965                   -.1038
    .985           -.0955
 1.000     -.0599
                            .0767           -.1335          -.5563
ALPHA ( 4) =    8.005    BETA  ( 2) =     .180   MACH   =  .89613    Q     =  597.48    P     =  1052.9    RN   =  2.5  7
 SECTION ( 1)LEFT WING BOT SURF                DEPENDENT VARIABLE CP
2Y/BW       .2990   .3540   .4270   .5340   .6730   .7200   .8870   .9720
  X/CW
    .010   -.3598  -.3957   .2554   .4986   .4495   .4790   .4348
    .020    .0000  -.0960   .3802   .4072   .4012   .3980   .3664  -.4734
    .040           -.0078   .3722
    .050   -.0335
    .060                            .3150   .2340   .2695   .2691
    .080                            .2576                           -.3166
```

```
                    AMES 11-073(OA148) -140A/B/C/R ORB LEFT WING BOT          (XEBL43)

ALPHA ( 4) =    8.006    BETA  ( 2) =     .180

 SECTION ( 1)LEFT WING BOT SURF           DEPENDENT VARIABLE CP

2Y/BW         .2990    .3640    .4270    .5340    .6730    .7800    .8870    .9720

 X/CW
   .081                       .2877
   .086              .2211
   .094     .0372
   .150                                .2056    .2082    .2090    .1280
   .157                                                                  -.2096
   .163              .3183
   .177                       .2153
   .229     .1347
   .246              .1963
   .250                                .1700    .1602    .1359    .0642
   .274                       .1743
   .345                                                                  -.1187
   .390              .1730
   .450                                .1183    .1203             .0374
   .402                       .1450
   .503                                                                  -.1190
   .550                                .0376    .0272
   .565                      -.6729
   .600                                                          -.0027
   .637              .0280
   .650                                                  .0348
   .670                                                                  -.0892
   .700                                         .0509
   .725                                .0870
   .750                                                  .2653    .1273
   .760                       .0920
   .775                                .3591    .1706
   .738              .1085
   .808                       .2110
   .834     .0308
   .839              .1158
   .850                               -.0715   -.1251   -.1233
   .857                      -.0524
   .862                                                                  -.3248
   .865     .2390
   .879             -.0542
   .900    -.0813                     -.2098                     -.2597
   .905                      -.1811
   .919             -.1600
   .950                               -.1731   -.2087   -.2620
   .953                      -.1073
   .955             -.1011
   .965    -.0474
  1.000                       .0508            -.1115            -.5859
```

AMES 11-073(OA148) -140A/B/C/R ORB LEFT WING BOT (XEBL43)

ALPHA (4) = 8.004 BETA (3) = 4.244 MACH = .89613 Q = 597.48 P = 1062.9 RN/L = 3.6207

SECTION (1)LEFT WING BOT SURF DEPENDENT VARIABLE CP

2Y/BW	.2990	.3640	.4270	.5340	.6730	.7800	.8870	.9720
X/CW								
.010	-.5426	-.3440	.0878	.4573	.4119	.4103	.3576	
.020	.0000	-.1779	.2576	.3965	3754	.3718	.3229	-.6456
.040		-.0354	.3245					
.050	-.1174			.3153	.2897	.2810	.2513	
.069								-.4336
.080				.2546				
.081			.2692					
.086		.1438						
.094	-.0276							
.150				.1997	.2095	.1993	.1157	
.157								-.2649
.163		.2794						
.177			.2111					
.229	.0984							
.246		.1756						
.250				.1630	.1511	.1391	.0514	
.274			.1741					
.345								-.1855
.390		.1645						
.400				.1081	.1129		.0140	
.402			.1277					
.503								-.1729
.550				.0390	.0313			
.565			-.7202					
.600							-.0152	
.637		.0251						
.640						.0380		
.670								-.1313
.700					.0553			
.725				.0812				
.750						.2463	.1131	
.760			.0907					
.775				.3330	.1568			
.798		.1072						
.808			.1931					
.834	.0270							
.839		.1118						
.850				-.0639	-.1268	-.1210		
.857			-.0490					
.862								-.3658
.865	.2343							
.879		-.0362						
.900	-.0622			-.1831			-.2469	
.905			-.1716					
.919		-.1280						

```
                                    AMES 11-073(OA148) -140A/B/C/R ORB LEFT WING BOT              (XEBL43)

ALPHA ( 4) =     8.004     BETA  ( 3) =     4.244

 SECTION ( 1)LEFT WING BOT SURF             DEPENDENT VARIABLE CP

2Y/BW        .2990   .3640   .4270   .5340   .6730   .7800   .8870   .9720

  X/CW
   .950                             -.1767  -.1878  -.2555
   .953                     -.1422
   .955             -.1008
   .965    -.0553
  1.000                     -.0229          -.1111          -.6055

ALPHA ( 5) =    11.977     BETA  ( 1) =    -3.853   MACH   =  .89753     Q      =   598.50     P      =  1061.4     RN/L    =  3.6129

 SECTION ( 1)LEFT WING BOT SURF             DEPENDENT VARIABLE CP

2Y/BW        .2990   .3640   .4270   .5340   .6730   .7800   .8870   .9720

  X/CW
   .010    -.4739  -.5625   .1978   .6321   .6122   .5905   .5299
   .020     .0000  -.1356   .4107   .5855   .5865   .5724   .5230  -.4309
   .040            -.0288   .4912
   .050    -.0137                   .4904   .4898   .4806   .4520
   .069                                                             -.2349
   .080                             .4246
   .081                     .4235
   .086             .2840
   .094     .0809
   .150                             .3544   .3640   .3614   .2862
   .157                                                             -.1739
   .163             .4223
   .177                     .3428
   .229     .2131
   .246             .3141
   .250                             .2953   .2945   .2784   .2100
   .274                     .2918
   .345                                                             -.0283
   .390             .2822
   .400                             .2254   .2281           .1500
   .402                     .2475
   .503                                                             -.0496
   .550                             .1299   .1285
   .565                     -.6143
   .600                                                     .0878
   .637             .1147
   .650                                             .1118
   .670                                                             -.0231
   .700                                     .1100
   .745                             .1344
   .750                                             .3081   .1856
   .760                     .1294
```

```
                    AMES 11-073(OA148) -140A/B/C/R ORB LEFT WING BOT                (XEBL43)

ALPHA ( 5) =   11.977    BETA  ( 1) =   -3.853

 SECTION ( 1)LEFT WING BOT SURF            DEPENDENT VARIABLE CP

2Y/BW       .2990    .3640    .4270    .5340    .6730    .7800    .8870    .9720

  X/CW
   .775                                    .3956    .2103
   .798              .1368
   .808                       .2459
   .834     .0558
   .839              .1338
   .850                               -.0339   -.0828   -.0710
   .857                      -.0248
   .862                                                                  -.2604
   .865     .2816
   .879             -.0485
   .900    -.0819                     -.1925                     -.1734
   .905                      -.1856
   .919             -.1849
   .950                               -.2631   -.2339   -.2237
   .953                      -.1833
   .955             -.1705
   .965    -.0982
  1.000                      -.0534            -.3762            -.6152
ALPHA ( 5) =   11.988    BETA  ( 2) =    .182   MACH   =  .89753    Q     =  598.50    P     =  1061.4    RN/L   =  3.6129

 SECTION ( 1)LEFT WING BOT SURF            DEPENDENT VARIABLE CP

2Y/BW       .2990    .3640    .4270    .5340    .6730    .7800    .8870    .9720

  X/CW
   .010    -.6939   -.4170   -.0254    .5454    .5274    .4766    .4099
   .020     .0000   -.2115    .2551    .5392    .5333    .5119    .4476   -.6323
   .040             -.1184    .4155
   .050    -.1077                      .4654    .4672    .4434    .4010
   .069                                                                  -.3914
   .080                                .4056
   .081                       .3934
   .086              .1935
   .094     .0107
   .150                                .3369    .3526    .3419    .2536
   .157                                                                  -.2453
   .163              .3785
   .177                       .3307
   .229     .1713
   .246              .2916
   .250                                .2850    .2754    .2587    .1776
   .274                       .2878
   .345                                                                  -.1129
   .390              .2670
```

DATE 10 FEB 76 TABULATED PRESSURE DATA - OA148 (AMES 11-073-1)

AMES 11-073(OA148) =140A/B/C/R ORB LEFT WING BOT (XE8L43)

ALPHA (5) = 11.988 BETA (2) = .182

SECTION (1)LEFT WING BOT SURF DEPENDENT VARIABLE CP

2Y/BW	.2990	.3640	.4270	.5340	.6730	.7800	.8870	.9720
X/CW								
.400				.2145	.2140		.1191	
.402			.2395					
.503								-.1284
.550				.1252	.1142			
.565			-.6257					
.600							.0528	
.637		.1080						
.650						.0876		
.670								-.0711
.700					.0938			
.725				.1276				
.750						.2803	.1540	
.760			.1243					
.775				.3897	.1888			
.790		.1445						
.808			.2397					
.834	.0552							
.839		.1396						
.850				-.0357	-.1040	-.0876		
.857			-.0166					
.862								-.3112
.865	.2835							
.879		-.0283						
.900	-.0573			-.1952			-.1952	
.905			-.1701					
.919		-.1582						
.950				-.2515	-.2442	-.2412		
.953			-.1933					
.955		-.1497						
.965	-.0892							
1.000			-.1185		-.3560		-.6603	

ALPHA (5) = 11.978 BETA (3) = 4.261 MACH = .89753 Q = 598.50 P = 1061.4 RN/L = 3.6129

SECTION (1)LEFT WING BOT SURF DEPENDENT VARIABLE CP

2Y/BW	.2990	.3640	.4270	.5340	.6730	.7800	.8870	.9720
X/CW								
.010	-.7989	-.3934	-.2376	.4334	.4310	.3462	.2813	
.020	.0000	-.3160	.0833	.4691	.4581	.4274	.3594	-.7643
.040		-.2284	.3261					
.050	-.1968			.4275	.4215	.3953	.3452	
.069								-.4975
.080				.3777				

DATE 10 FEB 76 TABULATED PRESSURE DATA - OA148 (AMES 11-073-1)

AMES 11-073(OA148) -140A/B/C/R ORB LEFT WING BOT (XEBL43)

ALPHA (5) = 11.978 BETA (3) = 4.261

SECTION (1)LEFT WING BOT SURF DEPENDENT VARIABLE CP

2Y/BW	.2990	.3640	.4270	.5340	.6730	.7800	.8870	.9720
X/CW								
.081			.3479					
.086		.1111						
.094	-.0662							
.150				.3154	.3201	.3129	.2168	
.157								-.2963
.163		.3193						
.177			.3088					
.229	.1152							
.246		.2549						
.250				.2625	.2563	.2403	.1504	
.274			.2704					
.345								-.1790
.390		.2497						
.400				.1964	.1962		.0939	
.402			.2159					
.503								-.1821
.550				.1106	.1077			
.565			-.6107					
.600							.0312	
.637		.0959						
.650						.0774		
.670								-.1241
.700					.0852			
.725				.1196				
.750						.2491	.1259	
.760			.1281					
.775				.3678	.1692			
.798		.1343						
.808			.2311					
.834	.0501							
.839		.1399						
.850				-.0346	-.1115	-.0954		
.857			-.0105					
.862								-.3637
.865	.2799							
.879		-.0107						
.900	-.0321			-.1826			-.2153	
.905			-.1500					
.919		-.1365						
.950				-.2409	-.2332	-.2440		
.953			-.1846					
.955		-.1500						
.965	-.0759							
1.000			-.1808		-.3118		-.6902	

```
                                  AMES 11-073(OA148) -140A/B/C/R ORB LEFT WING BOT           (XEBL44)   ( 05 AUG 75  )

           REFERENCE DATA                                                                    PARAMETRIC DATA

SPEF   =  2690.0000 SQ.FT.   XMRP  =  1076.6800 IN. XO                          RUDDER =      .000  SPDBRK =    55.000
LREF   =   474.8000 IN.      YMRP  =      .0000 IN. YO                          BDFLAP =    22.500  L-ELVN =    10.000
BREF   =   936.0000 IN.      ZMRP  =   375.0000 IN. ZO                          R-ELVN =    10.000  MACH   =      .600
SCALE  =      .0300

ALPHA ( 1) =   -4.010    BETA  ( 1) =   -7.850   MACH   =  .59610    Q     =  593.75    P     =  2387.2    RN/L   =  4.8840

 SECTION ( 1)LEFT WING BOT SURF              DEPENDENT VARIABLE CP

2Y/BW        .2990   .3640   .4270   .5340   .6730   .7800   .8870   .9720

  X/CW
    .010    -.2766  -.6013  -.9858 -2.1101 -2.1070 -2.0630 -1.9937
    .020     .0000  -.5325 -1.0375 -1.9074 -1.9604 -1.6364 -1.8109  -.7117
    .040            -.4899  -.9074
    .050    -.2354                  -.8944  -.8979  -.9722  -.8931
    .069                                                            -.5750
    .080                            -.6576
    .081                    -.5722
    .086            -.3106
    .094    -.2122
    .150                            -.3965  -.4071  -.4258  -.3959
    .157                                                            -.2764
    .163            -.3462
    .177                    -.3454
    .229    -.1663
    .245            -.3384
    .250                            -.2491  -.2720  -.2845  -.2687
    .274                    -.2280
    .345                                                            -.2038
    .390            -.1913
    .400                            -.1435  -.1499          -.1542
    .402                    -.1326
    .503                                                            -.1806
    .550                            -.1283  -.1160
    .565                    -.2285
    .600                                                    -.0761
    .637            -.1370
    .650                                            -.0520
    .670                                                            -.1250
    .700                                    -.0465
    .725                            -.0129
    .750                                             .1104   .0239
    .760                    -.0098
    .775                             .1331   .0707
    .779             .0101
    .808                     .0634
    .834    -.0530
    .837            -.0077
    .850                            -.0596  -.0529  -.0848
```

```
                     TABULATED PRESSURE DATA - OA148 ( AMES 11-073-1 )

                              AMES 11-073(OA148) -140A/B/C/R ORB LEFT WING BOT                  (XE8L44)
ALPHA ( 1) =   -4.010    BETA  ( 1) =   -7.850
 SECTION ( 1)LEFT WING BOT SURF              DEPENDENT VARIABLE CP

2Y/BW        .2930   .3640   .4270   .5340   .6730   .7800   .8870   .9720

 X/CW
   .857                     -.0587
   .862                                                             -.1293
   .865      .0657
   .879             -.0845
   .900     -.1049                  -.0964                  -.0820
   .905                     -.0961
   .919             -.1006
   .950                             -.0453  -.0377  -.0411
   .953                     -.0375
   .955             -.0651
   .965     -.0435
  1.000                      .0639           .0307           .0663
ALPHA ( 1) =   -3.994    BETA  ( 2) =   -3.842   MACH   =  .59610     Q     =  593.75    P     =  2387.2    RN/L   =  4.8840
 SECTION ( 1)LEFT WING BOT SURF              DEPENDENT VARIABLE CP

2Y/BW        .2930   .3640   .4270   .5340   .6730   .7800   .8870   .9720

 X/CW
   .010     -.1720  -.3828  -.7226 -1.9228 -1.9394 -2.1142 -1.8890
   .020      .0300  -.3409  -.8064 -1.4908 -1.6484 -1.6781 -1.7122  -.6238
   .040             -.3103  -.6985
   .050     -.1592                  -.8109  -.8380  -.8727  -.8531
   .069                                                             -.4971
   .080                             -.5967
   .081                     -.4828
   .085             -.2014
   .094     -.1513
   .150                             -.3661  -.3777  -.3833  -.3725
   .157                                                             -.2679
   .163             -.2522
   .177                     -.3046
   .229     -.1115
   .246             -.2880
   .250                             -.2269  -.2586  -.2652  -.2588
   .274                     -.2125
   .345                                                             -.1724
   .390             -.1751
   .400                             -.1386  -.1418          -.1419
   .432                     -.1223
   .503                                                             -.1595
   .550                             -.1244  -.1149
   .565                     -.1806
   .600                                                     -.0712
```

REPRODUCIBILITY OF THE
ORIGINAL PAGE IS POOR

```
                                 AMES 11-073(OA148) -140A/B/C/R ORB LEFT WING BOT            (XEBL44)

ALPHA ( 1) =   -3.934    BETA  ( 2) =   -3.842

 SECTION ( 1)LEFT WING BOT SURF              DEPENDENT VARIABLE CP

2Y/BW        .2990   .3640   .4270   .5340   .6730   .7800   .8870   .9720

  X/CW
   .637              -.1329
   .650                                              -.0476
   .670                                                              -.1104
   .700                                      -.0447
   .725                              -.0121
   .750                                               .1159   .0272
   .760                      -.0011
   .775                               .1530   .0683
   .799               .0151
   .808                       .0800
   .934      -.0441
   .833              -.0064
   .850                              -.0667  -.0603  -.0839
   .857                      -.0613
   .862                                                              -.1269
   .865       .0828
   .879              -.0820
   .900      -.0944                  -.1013                  -.0869
   .905                      -.1030
   .913              -.1052
   .950                              -.0529  -.0449  -.0478
   .953                      -.0491
   .955              -.0747
   .965      -.0413
  1.000                       .0626           .0309           .0636
ALPHA ( 1) =   -3.985    BETA  ( 3) =     .188   MACH   =  .59610     Q     =  593.75    P     =  2387.2    RN/L   =  4.8840

 SECTION ( 1)LEFT WING BOT SURF              DEPENDENT VARIABLE CP

2Y/BW        .2990   .3640   .4270   .5340   .6730   .7800   .8870   .9720

  X/CW
   .010      -.0857  -.1890  -.4759 -1.6241 -1.6672 -1.9978 -1.7108
   .020       .0000  -.1826  -.5522 -1.2499 -1.3542 -1.4225 -1.5770  -.5472
   .040              -.1602  -.5265
   .050      -.0982                  -.6983  -.7540  -.8113  -.7987
   .063                                                              -.3908
   .080                              -.5240
   .081                      -.3903
   .086              -.1070
   .094      -.0549
   .100                              -.3184  -.3416  -.3541  -.3491
   .150                                                              -.2411
   .163              -.1678
```

AMES 11-073(OA148) -140A/B/C/R ORB LEFT WING BOT (XEBL44)

ALPHA (1) = -3.985 BETA (3) = .188

SECTION (1)LEFT WING BOT SURF DEPENDENT VARIABLE CP

2Y/BW	.2390	.3540	.4270	.5340	.6730	.7800	.8870	.9720
X/CW								
.177			-.2596					
.229	-.0643							
.246		-.2363						
.250				-.2032	-.2398	-.2508	-.2411	
.274			-.1828					
.345								-.1490
.390		-.1543						
.400				-.1281	-.1354		-.1343	
.402			-.1165					
.543								-.1408
.550				-.1168	-.1109			
.565			-.1692					
.590							-.0659	
.637		-.1271						
.650						-.0459		
.673								-.1004
.700					-.0416			
.725				-.0091				
.750						.1191	.0306	
.760			.0029					
.775				.1671	.0704			
.798		.0149						
.809			.0820					
.834	-.0412							
.839		.0039						
.850				-.0716	-.0748	-.0916		
.857			-.0623					
.862								-.1177
.865	.0990							
.873		-.0759						
.900	-.0847			-.1095			-.0947	
.905			-.1046					
.919		-.1033						
.950				-.0607	-.0522	-.0592		
.953			-.0537					
.955		-.0712						
.965	-.0472							
1.000			.0549		.0335		.0418	

DATE 10 FEB 76 TABULATED PRESSURE DATA - OA148 (AMES 11-073-1)

AMES 11-073(OA148) -140A/B/C/R ORB LEFT WING BOT (XEBL44)

ALPHA (1) = -3.992 BETA (4) = 4.269 MACH = .59610 Q = 593.75 P = 2387.2 RN/L = 4.8840

SECTION (1)LEFT WING BOT SURF DEPENDENT VARIABLE CP

2Y/BW	.2900	.3640	.4270	.5340	.6730	.7800	.8870	.9720
Y/CH								
.010	-.0344	-.0591	-.2866	-1.2608	-1.3563	-1.6121	-1.4257	
.020	.0000	-.0621	-.3510	-1.0216	-1.0543	-1.1373	-1.2989	-.4021
.040		-.0446	-.3757					
.050	-.0488			-.5738	-.6354	-.6940	-.6953	
.060								-.2965
.080				-.4409				
.081			-.3101					
.085		-.0304						
.094	-.0494							
.150				-.2793	-.2952	-.3075	-.3124	
.157								-.2203
.163		-.0335						
.177			-.2174					
.229	-.0280							
.246		-.1883						
.250				-.1797	-.2110	-.2243	-.2130	
.274			-.1575					
.345								-.1158
.390		-.1249						
.400				-.1222	-.1200		-.1188	
.402			-.1073					
.503								-.1126
.550				-.1040	-.1026			
.565			-.1786					
.600							-.0585	
.637		-.1122						
[illegible]						-.0394		
[illegible]								-.0922
[illegible]					-.0392			
[illegible]				-.0076				
.750						.1224	.0335	
[illegible]			.0092					
[illegible]				.1775	.0629			
.799		.0137						
.809			.0817					
[illegible]	-.0373							
.839		.0084						
[illegible]				-.0721	-.0847	-.0932		
[illegible]			-.0595					
.888								-.1202
[illegible]	.0961							
[illegible]		-.0625						
[illegible]	-.0693			-.1152			-.1017	
[illegible]			-.0968					
.919		-.0558						

```
                              AMES 11-073(OA148) -140A/B/C/R ORB LEFT WING BOT            (XEBL44)

ALPHA ( 1) =   -3.992    BETA  ( 4) =    4.269

 SECTION ( 1)LEFT WING BOT SURF              DEPENDENT VARIABLE CP

2Y/BW        .2990   .3640   .4270   .5340   .6730   .7800   .8970   .9720

  X/CW
   .950                              -.0695  -.0654  -.0688
   .953                      -.0524
   .955              -.0599
   .985     -.0380
  1.000                      .0485           .0348           .0259

ALPHA ( 1) =   -4.007    BETA  ( 5) =    8.349   MACH   =  .59610     Q      =  593.75     P      =  2387.2     RN/L   =  4.8840

 SECTION ( 1)LEFT WING BOT SURF              DEPENDENT VARIABLE CP

2Y/BW        .2990   .3640   .4270   .5340   .6730   .7800   .8970   .9720

  X/CW
   .010     -.0162   .0285  -.0773  -.8933 -1.0720 -1.2801 -1.1550
   .020      0000    .0000  -.1292  -.7591  -.8065  -.9253 -1.0543  -.3000
   .040              .0348  -.2152
   .050     -.0220                  -.4360  -.5108  -.5765  -.5946
   .069                                                            -.2313
   .080                             -.3458
   .081                     -.2088
   .086              .0331
   .094     -.0215
   .150                             -.2214  -.2457  -.2607  -.2763
   .157                                                            -.2002
   .163             -.0326
   .177                     -.1650
   .229     -.0058
   .246             -.1375
   .250                             -.1518  -.1818  -.1895  -.1888
   .274                     -.1306
   .345                                                            -.1001
   .330             -.1066
   .400                             -.1024  -.1046          -.1023
   .402                     -.0902
   .500                                                            -.0964
   .550                             -.0952  -.0890
   .555                     -.2148
   .600                                                     -.0481
   .637             -.1030
   .650                                             -.0265
   .670                                                            -.0879
  [illegible]                                -.0280
  [illegible]                       -.0015
   .750                                              .1228   .0399
   .760                      .0116
```

```
DATE [illegible] FEB 76          TABULATED PRESSURE DATA - OA148 ( AMES 11-073-1 )

                                        AMES 11-073(OA148) -140A/B/C/R ORB LEFT WING BOT              (XEBL44)

ALPHA  ( 1) =    -4.007    BETA  ( 5) =    8.349

SECTION  ( 1)LEFT WING BOT SURF                    DEPENDENT VARIABLE CP

2Y/BW         .2990   .3540   .4270   .5340   .6730   .7800   .8870   .9720

  X/CW
   .775                                .1844   .0648
  [illegible]          .0204
   .808                        .0760
   .824  -.0293
  [illegible]          .0154
  [illegible]                          -.0545  -.0850  -.0890
  [illegible]                  -.0457
  [illegible]                                                          -.1200
   .865   .1071
   .873          -.0434
  [illegible]  -.0476                  -.1023                  -.1016
  [illegible]                  -.0921
  [illegible]          -.0524
  [illegible]                          -.0605  -.0612  -.0663
  [illegible]                  -.0448
  [illegible]          -.0617
  [illegible]  -.0257
  1.000                         .0406           .0292           .0188

ALPHA  ( 2) =      .039    BETA  ( 1) =    -7.086    MACH   =  .59632     Q     =  593.96     P     =  2385.1     RN/L   =  4.8783

SECTION ( 1)LEFT WING BOT SURF                    DEPENDENT VARIABLE CP

2Y/BW         .2990   .3540   .4270   .5340   .6730   .7800   .8970   .9720

  X/CW
  [illegible]   .0044  -.0073  -.0913  -.7843  -.7654  -.6244  -.4611
  [illegible]   .0000  -.0364  -.2199  -.7182  -.5772  -.5817  -.5722  -.0752
  [illegible]          -.0326  -.3125
  [illegible]  -.0375                  -.4182  -.3973  -.4171  -.3512
  [illegible]                                                          -.0920
  [illegible]                          -.3220
  [illegible]                  -.2520
  [illegible]          -.0115
  [illegible]  -.0515
  [illegible]                          -.1837  -.1718  -.1513  -.1524
  [illegible]                                                          -.1585
  [illegible]          -.0958
  [illegible]                  -.1550
  [illegible]  -.0332
  [illegible]          -.1554
  [illegible]                          -.1016  -.1195  -.1185  -.1124
  [illegible]                  -.0378
  [illegible]                                                          -.0534
  [illegible]          -.0972
```

DATE 10 FEB 76 TABULATED PRESSURE DATA - OA148 (AMES 11-073-1)

AMES 11-073(OA148) -140A/B/C/R ORB LEFT WING BOT (XEB244)

ALPHA (2) = .039 BETA (1) = -7.886

SECTION (1)LEFT WING BOT SURF DEPENDENT VARIABLE CP

2Y/BW	.2990	.3640	.4270	.5340	.6730	.7800	.8870	.9720
X/CW								
.400				-.0584	-.0552		-.0548	
.450			-.0462					
.503								-.0813
.550				-.0692	-.0598			
.565			-.2741					
.600							-.0266	
.637		-.0862						
.650						-.0054		
.670								-.0629
.700					-.0070			
.725				.0213				
.750						.1691	.0591	
.760			.0227					
.775				.1936	.1075			
.789		.0399						
.808			.1006					
.834	-.0226							
.839		.0197						
.850				-.0467	-.0437	-.0707		
.864			-.0417					
.872								-.1554
.885	.1299							
873		-.0641						
.900	-.0921			-.0887			-.0863	
.905			-.0854					
.919		-.0929						
.950				-.0416	-.0197	-.0392		
.953			-.0343					
.965		-.0593						
.985	-.0307							
1.000			.0738		.0336		.0435	

ALPHA (2) = .052 BETA (2) = -3.865 MACH = .59632 Q = 593.95 P = 2388.1 RN/L = 4.8783

SECTION (1)LEFT WING BOT SURF DEPENDENT VARIABLE CP

2Y/BW	.2990	.3640	.4270	.5340	.6730	.7800	.8870	.9720
X/CW								
.010	.0224	.0517	.0365	-.5772	-.6039	-.5446	-.3811	
.020	.0000	.0300	-.0722	-.5761	-.4935	-.4893	-.4770	-.0849
.040		.0387	-.2093					
.050	-.0129			-.3440	-.3451	-.3471	-.3180	
.063								-.0861
.070				-.2701				

AMES 11-073(OA148) -140A/B/C/R ORB LEFT WING BOT (XE8L44)

ALPHA (2) = .052 BETA (2) = -3.866

SECTION (1)LEFT WING BOT SURF DEPENDENT VARIABLE CP

2Y/BW	.2990	.3640	.4270	.5340	.6730	.7600	.8870	.9720
X/CW								
.091			-.1898					
.056		.0392						
.094	-.0227							
.150				-.1503	-.1456	-.1345	-.1481	
.157								-.1609
.163		-.0345						
.177			-.1258					
.229	-.0108							
.246		-.1229						
.250				-.0930	-.1107	-.1078	-.1074	
.274			-.0837					
.345								-.0680
.330		-.0666						
.400				-.0583	-.0519		-.0548	
.402			-.0401					
.503								-.0840
.540				-.0640	-.0543			
.545			-.2397					
.600							-.0276	
.637		-.0836						
.650						-.0072		
.570								-.0799
.700					-.0098			
.725				.0194				
.750						.1618	.0551	
.760			.0215					
.775				.2028	.0992			
.799		.0449						
.808			.1074					
.934	-.0224							
.839		.0222						
.650				-.0478	-.0564	-.0759		
.857			-.0454					
.862								-.1639
.655	.1336							
.879		-.0655						
.900	-.0808			-.0968			-.0932	
.925			-.0944					
.919		-.0949						
.950				-.0545	-.0444	-.0492		
.953			-.0432					
955		-.0746						
.965	-.0330							
1.000			.0615		.0246		.0454	

DATE 10 FEB 76 TABULATED PRESSURE DATA - OA148 (AMES 11-073-1)

AMES 11-073(OA148) -140A/B/C/R ORB LEFT WING BOT (XEBL44)

ALPHA (2) = .053 BETA (3) = .192 MACH = .59632 Q = 593.96 P = 2386.1 RN/L = 4.8783

SECTION (1)LEFT WING BOT SURF DEPENDENT VARIABLE CP

2Y/BW	.2990	.3640	.4270	.5340	.6730	.7800	.8870	.9720
X/CW								
.010	.0138	.0755	.1307	-.4080	-.4768	-.4072	-.3112	
.020	.0000	.0679	.0463	-.4349	-.3789	-.3984	-.4025	-.1021
.040		.0823	-.0993					
.050	-.0034			-.2768	-.2817	-.2951	-.2760	
.069								-.1208
.080				-.2181				
.081			-.1254					
.085		.0854						
.094	-.0057							
.150				-.1321	-.1272	-.1241	-.1441	
.157								-.1652
.163		.0174						
.177			-.0988					
.229	.0135							
.246		-.0875						
.250				-.0799	-.0973	-.1070	-.1052	
.274			-.0722					
.345								-.0720
.390		-.0545						
.400				-.0530	-.0560		-.0632	
.402			-.0387					
.503								-.1007
.550				-.0641	-.0626			
.565			-.2285					
.600							-.0361	
.637		-.0783						
.650						-.0117		
.670								-.1023
.700					-.0127			
.725				.0161				
.750						.1517	.0488	
.760			.0290					
.775				.2037	.0908			
.798		.0376						
.808			.1050					
.834	-.0207							
.839		.0240						
.850				-.0605	-.0742	-.0884		
.857			-.0504					
.862								-.1732
.865	.1247							
.873		-.0606						
.900	-.0695			-.1050			-.1040	
.905			-.0986					
.919		-.0971						

```
                                   AMES 11-073(OA148) -140A/B/C/R ORB LEFT W. G BOT              (XEBL44)
ALPHA ( 2) =     .053    BETA  ( 3) =     .192

 SECTION ( 1)LEFT WING BOT SURF                DEPENDENT VARIABLE CP

2Y/BW        .2990   .3640   .4270   .5340   .6730   .7800   .8870   .9720

  X/CW
   .950                              -.0667  -.0506  -.0645
   .953                      -.0591
   .955              -.0778
   .965      -.0437
  1.000                       .0480           .0262           .0358
ALPHA ( 2) =     .049    BETA  ( 4) =    4.248   MACH   =  .59632     Q      =  593.96     P      =  2386.1     RN/L   =  4.8783
 SECTION ( 1)LEFT WING BOT SURF                DEPENDENT VARIABLE CP

2Y/BW        .2990   .3640   .4270   .5340   .6730   .7800   .8870   .9720

  X/CW
   .010      -.0301   .0461   .1789  -.2519  -.3190  -.2482  -.1766
   .020       .0000   .0610   .1190  -.3006  -.2667  -.2837  -.2527  -.1255
   .040               .0782  -.0195
   .050      -.0089                  -.1893  -.2022  -.2180  -.2084
   .069                                                              -.1390
   .080                              -.1617
   .081                      -.0723
   .086               .0950
   .094      -.0063
   .150                              -.1048  -.1009  -.0948  -.1210
   .157                                                              -.1729
   .163               .0510
   .177                      -.0718
   .229       .0172
   .245              -.0501
   .250                              -.0623  -.0816  -.0891  -.0992
   .274                      -.0559
   .345                                                              -.0918
   .390              -.0429
   .400                              -.0509  -.0436          -.0601
   .402                      -.0390
   .503                                                              -.1153
   .550                              -.0622  -.0547
   .565                      -.2348
   .600                                                      -.0352
   .637              -.0753
   .650                                              -.0134
   .670                                                              -.1242
   .700                                      -.0128
   .725                               .0167
   [illegible]                                        .1429   .0419
   .760                       .0224
```

AMES 11-073(OA148) -140A/B/C/R ORB LEFT WING BOT (XEBL44)

ALPHA (2) = .049 BETA (4) = 4.248

SECTION (1)LEFT WING BOT SURF DEPENDENT VARIABLE CP

2Y/BW	.2990	.3640	.4270	.5340	.6730	.7800	.8870	.9720
X/CW								
.775				.2079	.0820			
.798		.0355						
.808			.0961					
.834	-.0165							
.839		.0227						
.850				-.0632	-.0766	-.0836		
.857			-.0497					
.862								-.1893
.865	.1154							
.879		-.0528						
.900	-.0543			-.1103			-.1065	
.905			-.0947					
.919		-.0922						
.950				-.0763	-.0585	-.0725		
.953			-.0647					
.955		-.0734						
.965	-.0374							
1.000			.0276		.0155		.0395	

ALPHA (2) = .044 BETA (5) = 8.307 MACH = .59632 Q = 593.96 P = 2386.1 RN/L = 4.8783

SECTION (1)LEFT WING BOT SURF DEPENDENT VARIABLE CP

2Y/BW	.2990	.3640	.4270	.5340	.6730	.7800	.8870	.9720
X/CW								
.010	-.1181	-.0479	.2095	-.0679	-.1844	-.1270	-.0888	
.020	.0000	.0106	.1807	-.1482	-.1534	-.1778	-.1655	-.1846
.040		.0397	.0631					
.050	-.0414			-.1019	-.1358	-.1572	-.1605	
.069								-.1978
.080				-.1076				
.081			-.0185					
.085		.0915						
.094	-.0239							
.150				-.0745	-.0729	-.0744	-.1139	
.157								-.2023
.163		.0811						
.177			-.0349					
.229	.0125							
.245		-.0405						
.250				-.0490	-.0659	-.0763	-.0959	
.274			-.0368					
.345								-.1256
.390		-.0294						

```
                         AMES 11-073(OA148) -140A/B/C/R ORB LEFT WING BOT          (XEBL44)

ALPHA ( 2) =     .044    BETA  ( 5) =     8.307

 SECTION ( 1)LEFT WING BOT SURF                  DEPENDENT VARIABLE CP

2Y/BW        .2990   .3640   .4270   .5340   .6730   .7800   .8870   .9720

  X/CW
   .400                            -.0411  -.0383          -.0610
   .402                    -.0328
   .503                                                            -.1417
   .550                            -.0568  -.0538
   .565                    -.2760
   .600                                                    -.0411
   .637            -.0675
   .650                                            -.0131
   .670                                                            -.1526
   .700                                    -.0100
   .725                             .0131
   .750                                             .1320   .0345
   .760                     .0322
   .775                             .2005   .0724
   .798             .0341
   .808                     .0903
   .834    -.0118
   .839             .0289
   .850                            -.0601  -.0882  -.0867
   .857                    -.0442
   .862                                                            -.2008
   .865     .1284
   .879            -.0428
   .900    -.0415                  -.1062                  -.1106
   .905                    -.0927
   .919            -.0843
   .950                            -.0782  -.0685  -.0810
   .953                    -.0663
   .955            -.0713
   .965    -.0246
  1.000                     .0084           .0058           .0222
ALPHA ( 3) =    3.950    BETA  ( 1) =    -7.902   MACH   =  .59694    Q     =  595.02    P     =  2385.4    RN/L   =  4.8785

 SECTION ( 1)LEFT WING BOT SURF                  DEPENDENT VARIABLE CP

2Y/BW        .2990   .3640   .4270   .5340   .6730   .7800   .8870   .9720

  X/CW
   .010     .0953   .1483   .3547   .0929   .1228   .2780   .3384
   .020     .0000   .1542   .2618  -.0328   .0798   .1128   .1880  -.0106
   .040             .1712   .0859
   .050     .0723                  -.0401   .0069   .0499   .0954
   .059                                                            -.0061
   .080                            -.0285
```

AMES 11-073(OA148) -140A/B/C/R ORB LEFT WING BOT (XEBL44)

ALPHA (3) = 3.950 BETA (1) = -7.902

SECTION (1)LEFT WING BOT SURF DEPENDENT VARIABLE CP

2Y/BW	.2990	.3640	.4270	.5340	.6730	.7800	.8870	.9720
X/CW								
.081			.0153					
.086		.1788						
.094	.0536							
.150				.0135	.0360	.0627	.0443	
.157								-.1174
.163		.1110						
.177			.0165					
.229	.0681							
.246		.0033						
.250				.0335	.0280	.0346	.0368	
.274			.0286					
.345								-.0109
.390		.0288						
.400				.0294	.0431		.0313	
.402			.0427					
.503								-.0422
.550				-.0016	.0090			
.565			-.3006					
.600							.0235	
.637		-.0307						
.650						.0440		
.670								-.0533
.700					.0365			
.725				.0590				
.750						.1955	.0943	
.760			.0560					
.775				.2395	.1365			
.798		.0735						
.808			.1361					
.834	.0076							
.839		.0490						
.850				-.0237	-.0221	-.0505		
.857			-.0180					
.862								-.1935
.865	.1682							
.879		-.0377						
.900	-.0562			-.0700			-.0930	
.905			-.0685					
.919		-.0732						
.950				-.0403	-.0132	-.0460		
.953			-.0270					
.955		-.0482						
.965	-.0145							
1.000			.0695		.0285		-.0217	

DATE 10 FEB 76 TABULATED PRESSURE DATA - OA148 (AMES 11-073-1)

AMES 11-073(OA148) -140A/B/C/R ORB LEFT WING BOT (XEBL44)

ALPHA (3) = 3.964 BETA (2) = -3.864 MACH = .59694 Q = 595.02 P = 2385.4 RN/L = 4.8785

SECTION (1)LEFT WING BOT SURF DEPENDENT VARIABLE CP

2Y/BW	.2530	.3640	.4270	.5340	.6730	.7800	.8870	.9720
X/CW								
.010	.0161	.0612	.3478	.1669	.1730	.3094	.3408	
.020	.0000	.1133	.3000	.0420	.1108	.1575	.2151	-.1281
.040		.1450	.1411					
.050	.0513			.0231	.0493	.0822	.0977	
.069								-.0954
.080				.0121				
.091			.0549					
[illegible]		.1804						
.134	.0475							
.150				.0290	.0485	.0666	.0404	
.157								-.1517
.163		.1435						
.177			.0288					
.229	.0677							
.245		.0199						
.250				.0355	.0382	.0333	.0212	
.274			.0314					
.345								-.0533
.390		.0326						
.400				.0281	.0354		.0182	
.402			.0395					
.503								-.0771
.550				-.0016	.0062			
.555			-.2793					
.600							.0082	
.637		-.0267						
.650						.0355		
.670								-.0845
.700					.0288			
.705				.0580				
[illegible]						.1854	.0778	
[illegible]			.0528					
[illegible]				.2368	.1247			
[illegible]		.0707						
.809			.1318					
.834	.0029							
.879		.0431						
[illegible]				-.0303	-.0385	-.0580		
[illegible]			-.0262					
[illegible]								-.2192
.975	.1625							
.979		-.0409						
[illegible]	-.0559			-.0878			-.1018	
[illegible]			-.0252					
[illegible]		-.0761						

AMES 11-073(OA148) -140A/B/C/R ORB LEFT WING BOT (XE8L44)

ALPHA (3) = 3.954 BETA (2) = -3.864

SECTION (1)LEFT WING BOT SURF DEPENDENT VARIABLE CP

2Y/BW	.2990	.3640	.4270	.5340	.6730	.7800	.8870	.9720
X/CW								
.950				-.0555	-.0331	-.0545		
.953			-.0457					
.955		-.0603						
.955	-.0304							
1.000			.0495		.0262		-.0036	

ALPHA (3) = 3.959 BETA (3) = .189 MACH = .59694 Q = 595.02 P = 2385.4 RN/L = 4.3785

SECTION (1)LEFT WING BOT SURF DEPENDENT VARIABLE CP

2Y/BW	.2990	.3640	.4270	.5340	.6730	.7800	.8870	.9720
X/CW								
.010	-.0823	-.0755	.3038	.2237	.2006	.3083	.3111	
.020	.0000	.0399	.3012	.0943	.1479	.1686	.1919	-.2535
.040		.0803	.1736					
.050	.0135			.0624	.0656	.0824	.0980	
.063								-.1967
.080				.0345				
.081			.0844					
.085		.1661						
.094	.0246							
.150				.0327	.0481	.0652	.0204	
.157								-.1865
.163		.1578						
.177			.0456					
.229	.0607							
.246		.0377						
.250				.0399	.0339	.0276	.0036	
.274			.0378					
.345								-.1093
.390		.0432						
.400				.0273	.0351		.0013	
.402			.0392					
.503								-.1282
.550				-.0052	-.0032			
.565			-.2432					
.600							-.0066	
.637		-.0256						
.650						.0252		
.670								-.1296
.700					.0212			
.725				.0510				
.750						.1590	.0621	
.760			.0528					

```
                         AMES 11-073(OA148) -140A/B/C/R ORB LEFT WING BOT              (XEBL44)
ALPHA ( 3) =    3.969    BETA  ( 3) =      .189

 SECTION ( 1)LEFT WING BOT SURF             DEPENDENT VARIABLE CP

2Y/BW        .2990   .3640   .4270   .5340   .6730   .7800   .8870   .9720

  X/CW
    .775                             .2382   .1144
    .798             .0693
    .808                     .1327
    .834     .0080
    .839             .0487
    .850                            -.0420  -.0560  -.0688
    .857                    -.0257
    .862                                                            -.2446
    .865     .1538
    .879            -.0376
    .900    -.0459                  -.0983                  -.1103
    .905                    -.0840
    .919            -.0822
    .950                            -.0698  -.0623  -.0662
    .953                    -.0574
    .955            -.0718
    .965    -.0300
   1.000                     .0226           .0144          -.0106
ALPHA ( 3) =    3.972    BETA  ( 4) =    4.243   MACH   =  .59694     Q      =  595.02     P      =  2385.4     RN/L   =  4.8785

 SECTION ( 1)LEFT WING BOT SURF             DEPENDENT VARIABLE CP

2Y/BW        .2990   .3640   .4270   .5340   .6730   .7800   .8870   .9720

  X/CW
    .010    -.2161  -.2532   .2201   .2611   .2355   .3135   .2957
    .020     .0000  -.0763   .2702   .1573   .1840   .2022   .2106  -.4526
    .040            -.0198   .1989
    .060    -.0460                   .0943   .0967   .1145   .1120
    [illegible]                                                             -.3354
    .080                             .0636
    .081                     .1067
    .085             .1286
    .094    -.0134
    .150                             .0478   .0676   .0708   .0265
    .167                                                            -.2440
    .173             .1593
    .177                     .0634
    .233     .0402
    .246             .0457
    .250                             .0426   .0415   .0358  -.0003
    .274                     .0475
    .345                                                            -.1701
    .390             .0459
```

```
                              AMES 11-073(OA148) -140A/B/C/R ORB LEFT WING BOT              (XEBL44)

ALPHA ( 3) =     3.972    BETA  ( 4) =     4.243

 SECTION ( 1)LEFT WING BOT SURF                 DEPENDENT VARIABLE CP

2Y/BW          .2990   .3640   .4270   .5340   .6730   .7800   .8870   .9720

  X/CW
   .400                                 .0290   .0347           -.0086
   .402                         .0423
   .503                                                                 -.1913
   .550                                -.0018  -.0053
   .555                        -.2589
   .600                                                         -.0187
   .637                -.0202
   .650                                                 .0184
   .670                                                                 -.1655
   .700                                         .0173
   .725                                 .0498
   .750                                                 .1556    .0559
   .760                         .0573
   .775                                 .2369   .0989
   .798                 .0677
   .808                         .1255
   .834         .0124
   .839                 .0486
   .850                                -.0479  -.0679  -.0705
   .857                        -.0302
   .862                                                                 -.2673
   .865         .1519
   .879                -.0301
   .900        -.0326                  -.1046                   -.1137
   .905                        -.0858
   .919                -.0699
   .950                                -.0869  -.0672  -.0759
   .953                        -.0661
   .955                -.0621
   .965        -.0208
  1.000                         .0021          -.0154           -.0128
ALPHA ( 3) =     3.982    BETA  ( 5) =     8.290   MACH   =  .59694    Q     =  595.02    P     =  2385.4    RN/L   =  4.8785

 SECTION ( 1)LEFT WING BOT SURF                 DEPENDENT VARIABLE CP

2Y/BW          .2990   .3640   .4270   .5340   .6730   .7800   .8870   .9720

  X/CW
   .010        -.3330  -.3902   .0723   .2755   .2443   .2804    .2468
   .020         .0000  -.2008   .1903   .1921   .2041   .2041    .1856  -.6479
   .040                -.1361   .1982
   .050        -.1317                   .1244   .1379   .1195    .1070
   .059                                                                  -.4811
   .060                                 .0847
```

AMES 11-073(OA148) -140A/B/C/R ORB LEFT WING BOT (XEBL44)

ALPHA (3) = 3.982 BETA (5) = 8.290

SECTION (1)LEFT WING BOT SURF DEPENDENT VARIABLE CR

2Y/BW	.2990	.3640	.4270	.5340	.6730	.7800	.8870	.9720
X/CW								
.081			.1222					
.086		.0637						
.094	-.0752							
.150				.0588	.0712	.0754	.0110	
.157								-.3063
.163		.1524						
.177			.0752					
.223	.0132							
.246		.0488						
.250				.0462	.0425	.0314	-.0167	
.274			.0488					
.345								-.2506
.390		.0415						
.400				.0269	.0284		-.0269	
.402			.0405					
.503								-.2595
.550				-.0064	-.0071			
.555			-.2813					
.600							-.0342	
.637		-.0205						
.650						.0081		
.670								-.2087
.700					.0081			
.725				.0432				
.750						.1328	.0320	
.760			.0598					
.775				.2137	.0848			
.788		.0630						
.800			.1179					
.844	.0122							
.849		.0453						
.850				-.0432	-.0801	-.0786		
.857			-.0231					
.862								-.2876
.865	.1596							
.873		-.0249						
.900	-.0163			-.1016			-.1284	
.925			-.0772					
.939		-.0537						
.950				-.0843	-.0822	-.0951		
.953			-.0615					
.955		-.0632						
.965	-.0043							
1.000			.0137		-.0471		-.0373	

AMES 11-073(OA148) -140A/B/C/R ORB LEFT WING BOT (XEBL44)

ALPHA (4) = 8.025 BETA (1) = -7.890 MACH = .59616 Q = 593.73 P = 2386.3 RN/L = 4.8652

SECTION (1)LEFT WING BOT SURF DEPENDENT VARIABLE CP

2Y/BW	.2990	.3540	.4270	.5340	.6730	.7800	.8870	.9720
X/CW								
.010	-.0350	-.1050	.3940	.5171	.5402	.5871	.5487	
.020	.0000	.0894	.4502	.4004	.4680	.5042	.5042	-.3946
.040		.1508	.3520					
.050	.1069			.2773	.3344	.3688	.3820	
.069								-.1957
.080				.2255				
.091			.2394					
.098		.2692						
.104	.1150							
.110				.1905	.2290	.2476	.2153	
.157								-.1663
.163		.2766						
.177			.1769					
.229	.1507							
.240		.1527						
.250				.1631	.1762	.1857	.1510	
.274			.1519					
.345								-.0331
.390		.1349						
.400				.1257	.1411		.1129	
.402			.1338					
.503								-.0640
.550				.0740	.0827			
.565			-.3143					
.600							.0730	
.637		.0356						
.650						.0905		
.670								-.0359
.700					.0787			
.725				.1027				
.750						.2238	.1299	
.760			.0900					
.775				.2788	.1699			
.798		.1149						
.808			.1684					
.834	.0328							
.839		.0821						
.850				.0065	-.0044	-.0274		
.857			.0152					
.862								-.2517
.865	.2009							
.879		-.0040						
.900	-.0221			-.0541			-.1040	
.905			-.0498					
.913		-.0463						

REPRODUCIBILITY OF THE ORIGINAL PAGE IS POOR

```
ALPHA ( 4) =     6.025    BETA  ( 1) =    -7.890

 SECTION ( 1)LEFT WING BOT SURF           DEPENDENT VARIABLE CP

2Y/BW            .2930     .3640     .4270     .5340     .6730     .7800     .8870     .9720

  X/CW
  .950                                        -.0412    -.0231    -.0676
  .953                              -.0186
  .955                    -.0255
  .965           .0098
  1.000                              .0474               .0191               -.1208
ALPHA ( 4) =     8.036    BETA  ( 2) =    -3.859   MACH   =   .59616    Q     =  593.73    P     =  2386.3    RN/L   =  4.8552

 SECTION ( 1)LEFT WING BOT SURF           DEPENDENT VARIABLE CP

2Y/BW            .2930     .3640     .4270     .5340     .6730     .7800     .8870     .9720

  X/CW
  .010          -.1907    -.3322     .2589     .5020     .4936     .5185     .4617
  .020           .0000    -.0525     .3787     .4080     .4491     .4636     .4493    -.6250
  .040                     .0281     .3444
  .050           .0302                         .2970     .3303     .3497     .3539
  [illegible]                                                                          -.3731
  [illegible]                                  .2366
  .081                               .2464
  .095                     .2188
  [illegible]    .0706
  .150                                         .1909     .2238     .2374     .1891
  .157                                                                                 -.2201
  [illegible]              .2737
  [illegible]                        .1834
  [illegible]    .1260
  .245                     .1534
  .250                                         .1683     .1665     .1674     .1257
  .274                               .1560
  .345                                                                                 -.1094
  .390                     .1359
  .400                                         .1282     .1305               .0905
  [illegible]                        .1271
  [illegible]                                                                          -.1382
  [illegible]                                  .0662     .0703
  [illegible]                       -.2913
  [illegible]                                                                .0421
  [illegible]              .0378
  [illegible]                                                      .0764
  [illegible]                                                                          -.0917
  [illegible]                                            .0670
  [illegible]                                  .0950
  [illegible]                                                      .2041     .1064
  [illegible]                        .0950
```

```
                                 AMES 11-073(OA148) -140A-B/C/R ORB LEFT WING BOT            (XEBL44)

ALPHA ( 4) =     8.037     BETA  ( 2) =   -3.859

 SECTION ( 1)LEFT WING BOT SURF              DEPENDENT VARIABLE CP

2Y/BW        .2990   .3540   .4270   .5340   .6730   .7800   .8870   .9720

  X/CW
   .775                               .2776   .1515
   .799                  .1047
   .808                          .1667
   .834         .0487
   .839                  .0805
   .850                              -.0082  -.0264  -.0464
   .857                          .0039
   .862                                                              -.2833
   .865         .2005
   .879                -.0059
   .900        -.0162                -.0741                  -.1156
   .905                        -.0595
   .919                -.0521
   .950                              -.0625  -.0427  -.0801
   .953                        -.0332
   .955                -.0385
   .965        -.0057
  1.000                          .0421           .0012           -.1322

ALPHA ( 4) =     8.040     BETA  ( 3) =     .178   MACH   =  .59616     Q      =  593.73     P      =  2385.3     RN/L   =  4.8852

 SECTION ( 1)LEFT WING BOT SURF              DEPENDENT VARIABLE CP

2Y/BW        .2990   .3540   .4270   .5340   .6730   .7800   .8870   .9720

  X/CW
   .010       -.3922  -.5965   .0855   .4566   .4514   .4238   .3539
   .020        .0000  -.2280   .2732   .3380   .4216   .4215   .3842  -.8719
   .040               -.1197   .3185
   .050       -.0040                   .2973   .3392   .3304   .3134
   [illegible]                                                          -.5308
   .070                                .2442
   .081                        .2484
   .086                .1540
   .094        .0110
   .150                                .1901   .2161   .2242   .1555
   .157                                                                -.2894
   .163                .2588
   .177                        .1837
   .223        .0339
   .246                .1542
   .250                                .1590   .1590   .1527   .0997
   .274                        .1518
   .345                                                                -.1950
   .390                .1370
```

AMES 11-073(OA148) -140A/B/C/R ORB LEFT WING BOT (XEBL44)

ALPHA (4) = 8.040 BETA (3) = .178

SECTION (1)LEFT WING BOT SURF DEPENDENT VARIABLE CP

2Y/BW	.2990	.3640	.4270	.5340	.6730	.7800	.8870	.9720
X/CW								
.400				.1151	.1199		.0608	
.402			.1211					
.503								-.2180
.557				.0634	.0616			
.565			-.2780					
.600							.0207	
.637		.0438						
.650						.0628		
.670								-.1466
.700					.0595			
.725				.0898				
.750						.1844	.0869	
.760			.0940					
.775				.2775	.1378			
.798		.1046						
.808			.1673					
[illegible]	.0475							
.843		.0890						
.850				-.0062	-.0374	-.0501		
.857			.0048					
.862								-.3101
.865	.1995							
.879		.0005						
.900	-.0097			-.0724			-.1349	
.905			-.0516					
.919		-.0481						
.950				-.0619	-.0451	-.0875		
.953			-.0275					
.955		-.0342						
.965	-.0038							
1.000			.0607		-.0244		-.1530	

ALPHA (4) = 8.039 BETA (4) = 4.241 MACH = .59616 Q = 593.73 P = 2386.3 RN/L = 4.8652

SECTION (1)LEFT WING BOT SURF DEPENDENT VARIABLE CP

2Y/BW	.2990	.3640	.4270	.5340	.6730	.7800	.8870	.9720
X/CW								
.010	-.5752	-.7486	-.1174	.3814	.3746	.2936	.2117	
.020	.0000	-.3709	.1342	.3572	.3736	.3611	.3007	-1.1494
.040		-.2568	.2693					
[illegible]	-.1536			.2849	.3143	.2987	.2734	
[illegible]								-.7520
[illegible]				.2274				

TABULATED PRESSURE DATA - OA148 (AMES 11-073-1)

AMES 11-073(OA148) -140A/B/C/R ORB LEFT WING BOT (XEBL44)

ALPHA (4) = 8.033 BETA (4) = 4.241

SECTION (1)LEFT WING BOT SURF DEPENDENT VARIABLE CP

2Y/BW	.2990	.3640	.4270	.5340	.6730	.7800	.8870	.9720
X/CW								
.081			.2284					
.086		.0738						
.094	-.0570							
.150				.1796	.2031	.2083	.1275	
.157								-.3682
.163		.2264						
.177			.1738					
.229	.0494							
.246		.1379						
.253				.1435	.1461	.1410	.0735	
.274			.1475					
.345								-.2887
.393		.1311						
.400				.1067	.1096		.0351	
.402			.1188					
.503								-.2930
.550				.0557	.0538			
.565			-.2586					
.600							-.0012	
.637		.0417						
.650						.0464		
.670								-.2044
.700					.0479			
.725				.0849				
.750						.1620	.0574	
.760			.0953					
.775				.2661	.1209			
.798		.1022						
.808			.1632					
.834	.0446							
.839		.0855						
.850				-.0081	-.0461	-.0626		
.857			.0146					
.862								-.3482
.865	.1998							
.879		.0067						
.900	.0043			-.0699			-.1548	
.905			-.0450					
.919		-.0442						
.950				-.0464	-.0539	-.1099		
.953			-.0236					
.955		-.0334						
.985	.0079							
1.000			.0471		-.0009		-.1871	

DATE 10 FEB 76 TABULATED PRESSURE DATA - OA148 (AMES 11-073-1)

AMES 11-073(OA148) -140A/B/C/R ORB LEFT WING BOT (XEBL44)

ALPHA (4) = 8.038 BETA (5) = 8.285 MACH = .59616 Q = 593.73 P = 2386.3 RN/L = 4.8652

SECTION (1)LEFT WING BOT SURF DEPENDENT VARIABLE CP

2Y/BW	.2990	.3640	.4270	.5340	.6730	.7800	.8870	.9720
X/CW								
.010	-.7814	-.6665	-.3419	.2648	.2645	.1415	.0443	
.020	.0000	-.4622	-.0373	.3007	.2994	.2734	.1878	-1.4207
.040		-.3507	.1885					
.050	-.2709			.2577	.2775	.2521	.2052	
.063								-.9519
.080				.2113				
.081			.1971					
.085		-.0193						
.094	-.1551							
.150				.1556	.1795	.1839	.0881	
.157								-.4472
.163		.1795						
.177			.1614					
.229	.0043							
.245		.1124						
.250				.1303	.1264	.1278	.0392	
.274			.1268					
.344								-.3815
.390		.1155						
.400				.0929	.0964		.0055	
.402			.0966					
.503								-.3623
.550				.0449	.0436			
.555			-.3245					
.600							-.0210	
.637		.0301						
.650						.0329		
.670								-.2554
.700					.0344			
.725				.0638				
.750						.1269	.0283	
.760			.0836					
.775				.2476	.0964			
.798		.0940						
.819			.1468					
.844	.0362							
.849		.0729						
.850				-.0117	-.0639	-.0762		
.857			.0025					
[illegible]								-.3802
.895	.1957							
[illegible]		.0048						
.900	.0070			-.0765			-.1793	
.905			-.0507					
.919		-.0482						

```
DATE 10 FEB 76              TABULATED PRESSURE DATA - OA148 ( AMES 11-073-1 )                                        PAGE 2262
                                      AMES 11-073(OA148) -140A/B/C/R ORB LEFT WING BOT                   (XEBL44)
ALPHA ( 4) =     8.038     BETA  ( 5) =     8.285

 SECTION ( 1)LEFT WING BOT SURF              DEPENDENT VARIABLE CP

2Y/BW        .2990   .3640   .4270   .5340   .6730   .7800   .8870   .9720

  X/CW
    .950                             -.0558  -.0654  -.1169
    .953                     -.0400
    .955             -.0473
    .965     .0043
   1.000                      .0137          -.0154          -.2175

ALPHA ( 5) =    12.021     BETA  ( 1) =    -7.852   MACH   =  .59616     Q      =  593.74     P      =  2396.7     RN/L   =  4.8654

 SECTION ( 1)LEFT WING BOT SURF              DEPENDENT VARIABLE CP

2Y/BW        .2990   .3640   .4270   .5340   .6730   .7800   .8870   .9720

  X/CW
    .010    -.3374  -.7345   .0799   .5949   .5947   .4729   .3916
    .020     .0000  -.2005   .3652   .5878   .6169   .5983   .5272  -.9442
    .040            -.0645   .4737
    .050     .0542                   .4901   .5384   .5367   .5117
    .059                                                             -.4992
    .080                             .4185
    .091                     .4016
    .096             .2721
    .104     .1282
    .153                             .3432   .3857   .3984   .3344
    .157                                                             -.2428
    .163             .3863
    .177                     .3170
    .229     .2092
    .246             .2856
    .250                             .2867   .2991   .3056   .2487
    .274                     .2670
    .345                                                             -.0702
    .390             .2466
    .400                             .2215   .2335           .1820
    .402                     .2271
    .503                                                             -.1046
    .550                             .1530   .1561
    .565                    -.3141
    .600                                                     .1148
    .637             .1099
    .650                                             .1375
    .670                                                             -.0426
    .700                                     .1230
    .725                             .1485
    .750                                             .2495   .1566
    .760                     .1379
```

```
DATE 10 FEB 75                 TABULATED PRESSURE DATA - OA148 ( AMES 11-073-1 )                                  PAGE 2263
                                          AMES 11-073(OA148) -140A/B/C/R ORB LEFT WING BOT                (XEBL44)
ALPHA ( 5) =   12.021    BETA  ( 1) =   -7.852
 SECTION ( 1)LEFT WING BOT SURF                  DEPENDENT VARIABLE CP
2Y/BW           .2990    .3640    .4270    .5340    .6730    .7800    .8870    .9720
  X/CW
   .775                                      .3212    .1995
   .799                  .1502
   .829                           .2157
   .834         .0793
   .839                  .1291
   .850                                      .0474    .0244   -.0032
   .857                           .0580
   .862                                                                         -.2853
   .865         .2457
   .873                  .0397
   .880         .0207                       -.0236                     -.1200
   .905                          -.0076
   .919                 -.0129
[illegible]                                 -.0159   -.0065   -.0797
[illegible]                       .0171
[illegible]             -.0049
   .985         .0228
  1.000                           .0818              .0284             -.2950
ALPHA ( 5) =   11.932    BETA  ( 2) =   -3.840    MACH   =  .59616     Q      =  593.74     P     =  2386.7     RN/L   =  4.8654
 SECTION ( 1)LEFT WING BOT SURF                  DEPENDENT VARIABLE CP
2Y/BW           .2990    .3640    .4270    .5340    .6730    .7800    .8870    .9720
  X/CW
[illegible]    -.5602   -.9595   -.1442    .4905    .4910    .3264    .2443
[illegible]     .0000   -.3723    .2165    .5305    .5455    .5125    .4291  -1.1719
   .040                 -.2195    .4119
[illegible]    -.0541                      .4626    .5028    .4904    .4503
[illegible]                                                                     -.6875
[illegible]                                .3976
[illegible]                       .3745
[illegible]              .1778
[illegible]     .0459
[illegible]                                .3260    .3585    .3667    .2896
[illegible]                                                                     -.3095
[illegible]              .3540
[illegible]                       .3049
[illegible]     .1533
[illegible]              .2647
[illegible]                                .2782    .2789    .2785    .2162
[illegible]                       .2577
[illegible]                                                                     -.1671
[illegible]              .2363
```

```
                         AMES 11-073(OA148) -140A/B/C/R ORB LEFT WING BOT           (XEBL44)

ALPHA ( 5) =   11.932    BETA  ( 2) =    -3.840

 SECTION ( 1)LEFT WING BOT SURF              DEPENDENT VARIABLE CP

2Y/BW            .2990     .3640     .4270     .5340     .6730     .7800     .8870     .9720

  X/CW
   .400                                         .2104     .2172               .1479
   .402                               .2153
   .503                                                                                 -.1827
   .550                                         .1414     .1421
   .565                              -.3002
   .600                                                                       .0911
   .637                     .1074
   .650                                                             .1179
   .670                                                                                 -.1042
   .700                                                   .1093
   .725                                         .1404
   .750                                                             .2256     .1268
   .760                               .1365
   .775                                         .3234     .1816
   .789                     .1471
   .808                               .2108
   .834           .0912
   .839                     .1169
   .850                                         .0435     .0033    -.0217
   .857                               .0495
   .862                                                                                 -.3232
   .865           .2423
   .879                     .0318
   .900           .0162                        -.0255                        -.1485
   .905                              -.0167
   .919                    -.0213
   .950                                        -.0168    -.0251    -.0983
   .953                               .0045
   .955                    -.0156
   .965           .0057
  1.000                               .0778               .0214              -.3558
ALPHA ( 5) =   11.946    BETA  ( 3) =      .176   MACH   =  .59616    Q      =  593.74    P      =  2386.7    RN/L   =  4.8654

 SECTION ( 1)LEFT WING BOT SURF              DEPENDENT VARIABLE CP

2Y/BW            .2990     .3640     .4270     .5340     .6730     .7800     .8870     .9720

  X/CW
   .010          -.8047   -1.1905    -.3893     .3639     .3646     .1594     .0772
   .020           .0000    -.5649     .0358     .4537     .4549     .4091     .3060   -1.3857
   .040                    -.3908     .3283
   .050          -.1739                         .4266     .4549     .4346     .3665
   .059                                                                                 -.8553
   .080                                         .3734
```

```
DATE 10 FEB 75              TABULATED PRESSURE DATA - OA148 ( AMES 11-073-1 )

                                   AMES 11-073(OA148) -140A/B/C/R ORB LEFT WING BOT              (XEBL44)

ALPHA ( 5 ) =   11.946    BETA  ( 3) =      .176

 SECTION ( 1)LEFT WING BOT SURF                DEPENDENT VARIABLE CP

2Y/BW         .2930   .3640   .4270   .5340   .6730   .7800   .8870   .9720

  X/CW
   .081                        .3414
   .085                .0779
   .094      -.0348
   .150                                .3057   .3307   .3382   .2415
   .157                                                                -.3685
   .163                .3104
   [illegible]                 .2680
   .223       .1134
   .246                .2363
   .250                                .2537   .2657   .2532   .1778
   .274                        .2429
   .345                                                                -.2583
   .390                .2243
   .400                                .1943   .1992           .1180
   [illegible]                 .2023
   [illegible]                                                         -.2634
   [illegible]                         .1252   .1241
   [illegible]                -.2923
   .600                                                        .0519
   .637                .1044
   .650                                                .1010
   [illegible]                                                         -.1705
   .700                                        .0934
   .705                                .1325
   .750                                                .2021   .0994
   [illegible]                 .1315
   [illegible]                         .3125   .1608
   [illegible]         .1442
   .808                        .2030
   .834       .0906
   .840                .1177
   .850                                .0269  -.0106  -.0283
   .857                        .0399
   [illegible]                                                         -.3443
   [illegible] .2334
   [illegible]         .0328
   [illegible] .0190                  -.0434                  -.1567
   [illegible]                -.0262
   [illegible]        -.0247
   [illegible]                        -.0306  -.0244  -.1089
   [illegible]                -.0136
   [illegible]        -.0265
   [illegible] .0031
   [illegible]                 .0266          -.00_3          -.2925
```

```
DATE 10 FEB 76          TABULATED PRESSURE DATA - OA148 ( AMES 11-073-1 )                                   PAGE 2266

                                  AMES 11-073(OA148) -140A/B/C/R ORB LEFT WING BOT                (XEBL44)

ALPHA ( 5) =   11.941    BETA  ( 4) =    4.247   MACH   =  .59616     Q      =  593.74    P     =  2386.7    RN/L   =  4.8654

 SECTION ( 1)LEFT WING BOT SURF                    DEPENDENT VARIABLE CP

2Y/BW        .2990    .3540    .4270    .5340    .6730    .7800    .8870    .9720

  X/CW
    .010   -1.0097   -.9549   -.6087    .2234    .2166   -.0416   -.1142
    .020     .0000   -.6221   -.1439    .3631    .3514    .2899    .1758 -1.5705
    .040             -.4792    .2318
    .050    -.2937                      .3720    .3933    .3641    .2867
    .060                                                                   -1.0156
    .080                                .3301
    .091                       .2884
    .126             -.0154
    .134    -.1370
    .150                                .2712    .2958    .2970    .1943
    .157                                                                    -.4387
    .163              .2515
    .177                       .2610
    .229     .0579
    .246              .2016
    .250                                .2269    .2328    .2236    .1355
    .274                       .2225
    .345                                                                    -.3325
    .390              .2020
    .400                                .1775    .1774             .0802
    .402                       .1877
    .503                                                                    -.3392
    .550                                .1097    .1034
    .555                      -.2962
    .600                                                           .0220
    .637              .0987
    .650                                                  .0862
    .670                                                                    -.2266
    .700                                         .0775
    .725                                .1094
    .750                                                  .1724    .0719
    .760                       .1202
    .775                                .3000    .1377
    .793              .1280
    .809                       .1870
    .834     .0755
    .839              .1121
    .850                                .0091   -.0277   -.0431
    .857                       .0374
    .862                                                                    -.3684
    .865     .2332
    .879              .0300
    .900     .0327                     -.0587                     -.1678
    .905                      -.0326
    .919             -.0250
```

```
DATE 10 FEB 76             TABULATED PRESSURE DATA - OA148 ( AMES 11-073-1 )                                            PAGE 2287

                                      AMES 11-073(OA148) -140A/B/C/R ORB LEFT WING BOT                    (XEBL44)

ALPHA ( 5) =    11.941    BETA  ( 4) =    4.247

 SECTION ( 1)LEFT WING BOT SURF                 DEPENDENT VARIABLE CP

2Y/BW        .2990    .3640    .4270    .5340    .6730    .7800    .8870    .9720

  X/CW
    .950                                -.0618   -.0503   -.1220
    .953                       -.0293
    .955              -.0278
    .965     .0232
   1.000                        .0278            -.0221            -.2553
ALPHA ( 5) =    11.928    BETA  ( 5) =    8.307   MACH   =  .59616     Q      =  593.74     P      =  2386.7     RN/L  =  4.8654

 SECTION ( 1)LEFT WING BOT SURF                 DEPENDENT VARIABLE CP

2Y/BW        .2990    .3640    .4270    .5340    .6730    .7800    .8870    .9720

  X/CW
    .010   -1.2652   -.7572   -.8471    .0389    .0420   -.2728   -.3400
    .020     .0000   -.6738   -.3429    .2463    .2299    .1553    .0240  -1.7559
    .040             -.5612    .1141
    .050    -.4359                      .3026    .3195    .2769    .1955
    .069                                                                  -1.1851
    .080                                .2794
    .081                        .2326
    .086             -.1001
    .094    -.2377
    .150                                .2345    .2611    .2517    .1512
    .157                                                                   -.5075
    .163              .1918
    .177                        .2309
    .223     .0018
    .245              .1616
    .250                                .2019    .2049    .1900    .0925
    .274                        .2005
    .345                                                                   -.4158
    .390              .1812
    .400                                .1577    .1515             .0407
    .429                        .1654
    .503                                                                   -.4137
    .550                                .1000    .0897
    .565                       -.3370
    .600                                                           -.0031
    .637              .0846
    .650                                                  .0568
    .670                                                                   -.2652
    .700                                         .0544
    .725                                .0960
    .750                                                  .1362    .0345
    .760                        .1112
```

AMES 11-073(OA148) -140A/B/C/R ORB LEFT WING BOT (XEBL44)

ALPHA (5) = 11.928 BETA (5) = 8.307

SECTION (1)LEFT WING BOT SURF DEPENDENT VARIABLE CP

2Y/BW	.2990	.3640	.4270	.5340	.6730	.7800	.8870	.9720
X/CW								
.775				.2710	.1059			
.798		.1210						
.808			.1730					
.834	.0720							
.833		.1128						
.850				.0041	-.0458	-.0514		
.857			.0257					
.862								-.3631
.865	.2315							
.879		.0301						
.900	.0373			-.0791			-.1750	
.905			-.0313					
.919		-.0267						
.950				-.0886	-.0628	-.1298		
.953			-.0394					
.955		-.0406						
.965	.0241							
1.000			.0060		-.0797		-.2061	

```
DATE 10 FEB 76            TABULATED PRESSURE DATA - OA148 ( AMES 11-073-1 )                                              PAGE 2269

                                    AMES 11-073(OA148) -140A/B/C/R ORB LEFT WING BOT                  (XEBL45)   ( 05 AUG 75  )

              REFERENCE DATA                                                                           PARAMETRIC DATA

SREF  =  2690.0000 SQ.FT.   XMRP  =  1076.6800 IN. XO                                     RUDDER =      .000   SPDBRK =    55.000
LREF  =   474.8000 IN.      YMRP  =      .0000 IN. YO                                     BDFLAP =    22.500   L-ELVN =     4.000
BREF  =   936.0690 IN.      ZMRP  =   375.0000 IN. ZO                                     R-ELVN =     4.000   MACH   =      .900
SCALE =      .0300

ALPHA ( 1) =   -3.951    BETA  ( 1) =   -3.852   MACH   =   .89683     Q      =   597.89     P      =   1061.9     RN/L   =  3.6441

 SECTION ( 1)LEFT WING BOT SURF           DEPENDENT VARIABLE CP

2Y/BW           .2990   .3640   .4270   .5340   .6730   .7800   .8870   .9720

  X/CW
   .010        -.1401  -.3014  -.5040 -1.0898 -1.2589 -1.0281 -1.0416
   .020         .0000  -.2502  -.5372 -1.2690 -1.3129 -1.3345 -1.3468 -1.1899
   .040                -.2232  -.6579
   .050        -.1308                  -1.1675 -1.3108 -1.3708 -1.3745
   [illegible]                                                          -.9994
   .080                                -1.0746
   .081                         -.4839
   .086                -.1169
   .094        -.1225
   .150                                 -.6139 -1.1389 -1.2239 -1.2511
   .157                                                                 -.5191
   .163                -.1738
   .177                         -.4739
   [illegible] -.0560
   [illegible]         -.3209
   [illegible]                          -.3897  -.4486  -.7518  -.9916
   [illegible]                  -.3677
   [illegible]                                                          -.4662
   [illegible]         -.3269
   [illegible]                          -.2444  -.2434          -.3995
   [illegible]                  -.2327
   [illegible]                                                          -.3912
   [illegible]                          -.2641  -.2133
   [illegible]                  -.7921
   [illegible]                                                  -.1687
   [illegible]         -.2744
   [illegible]                                          -.1942
   [illegible]                                                          -.2645
   [illegible]                                  -.2214
   [illegible]                          -.2112
   [illegible]                                          -.1306  -.1493
   [illegible]                  -.1837
   [illegible]                          -.0973  -.1097
   [illegible]         -.1505
   [illegible]                  -.1232
   [illegible] -.1795
   [illegible]         -.1975
   [illegible]                          -.1970  -.1713  -.2192
```

```
                                         AMES 11-073(OA148) -140A/B/C/R ORB LEFT WING BOT                  (XE8L45)

ALPHA ( 1) =    -3.951    BETA  ( 1) =    -3.852

 SECTION ( 1)LEFT WING BOT SURF                  DEPENDENT VARIABLE CP

2Y/BW        .2990   .3640   .4270   .5340   .6730   .7800   .8870   .9720

  X/CW
    .857                     -.1946
    .862                                                             -.1770
    .865    -.1335
    .879            -.1776
    .900    -.1422                   -.1410                  -.1130
    .905                     -.1460
    .919            -.1028
    .950                             -.0179  -.0202  -.0172
    .953                     -.0115
    .955            -.0152
    .965     .0210
   1.000                      .1127           .0765           .0709

ALPHA ( 1) =    -3.932    BETA  ( 2) =      .188   MACH    =  .89583     Q      =  597.89     P      =  1051.9     RN/L   =  3.6441

 SECTION ( 1)LEFT WING BOT SURF                  DEPENDENT VARIABLE CP

2Y/BW        .2990   .3640   .4270   .5340   .6730   .7800   .8870   .9720

  X/CW
    .010    -.0475  -.1173  -.3189 -1.0763 -1.2833 -1.0723 -1.1039
    .020     .0000  -.0950  -.3569 -1.2447 -1.3405 -1.3658 -1.0711  -.6203
    .040            -.0796  -.4701
    .050    -.0599                  -1.1201 -1.2676 -1.2858 -1.0756
    .069                                                             -.5655
    .080                             -.6853
    .091                     -.3677
    .085            -.0284
    .094    -.0634
    .150                             -.5069  -.6322  -.9512  -.8992
    .157                                                             -.3527
    .163            -.0905
    .177                     -.3997
    .224    -.0176
    .246            -.2518
    .250                             -.3561  -.3733  -.5930  -.7636
    .314                     -.3151
    .345                                                             -.3881
    .390            -.2824
    .400                             -.2500  -.2602          -.5562
    .412                     -.2231
    .507                                                             -.3335
    .5                               -.3029  -.2759
    .540                     -.7154
    .600                                                     -.294
```

```
                              AMES 11-073(OA148) -140A/B/C/R CRB LEFT WING BOT                (XEBL45)

ALPHA ( 1) =    -3.932    BETA  ( 2) =     .188

 SECTION ( 1)LEFT WING BOT SURF              DEPENDENT VARIABLE CP

2Y/BW        .2390   .3640   .4270   .5340   .6730   .7800   .8870   .9720

  X/CW
   .637              -.2819
   .650                                              -.2857
   .670                                                              -.2421
   .700                                      -.3110
   .725                              -.2704
   .750                                              -.1209  -.1938
   .760                      -.2065
   .775                              -.0628  -.1129
   .799              -.1682
   .818                      -.1220
   .834      -.1918
   .839              -.1702
   .850                              -.2153  -.2013  -.2461
   .857                      -.2027
   .862                                                              -.1462
   .865      -.1296
   .879              -.1823
   .900      -.1600                  -.1555                  -.1085
   .905                      -.1536
   .919              -.1157
   .950                              -.0230  -.0120  -.0328
   .953                      -.0176
   .955              -.0225
   .965       .0147
  1.000                       .1039           .1004           .0261
ALPHA ( 1) =    -3.942    BETA  ( 3) =    4.270   MACH   =  .89683     Q      =  597.89     P      =  1061.9     RN/L   =  3.6441

 SECTION ( 1)LEFT WING BOT SURF              DEPENDENT VARIABLE CP

2Y/BW        .2390   .3640   .4270   .5340   .6730   .7800   .8870   .9720

  X/CW
   .010       .0031  -.0033  -.1492 -1.0335 -1.2025 -1.0939  -.9457
   .020       .0000   .0074  -.2186 -1.0918 -1.2900 -1.1405  -.9331  -.6737
   .040               .0202  -.3019
   .050      -.0139                  - 6744 -1.2230 -1.1161  -.8334
   [illegible]                                                       -.6137
   .080                              -.5361
   [illegible]               -.3075
   [illegible]        .0355
   [illegible] -.0169
   [illegible]                       -.4244  -.4879  -.8855  -.7681
   [illegible]                                                       -.3830
   .153              -.0309
```

AMES 11-073(OA148) -140A/B/C/R ORB LEFT WING BOT (XEBL45)

ALPHA (1) = -3.942 BETA (3) = 4.270

SECTION (1)LEFT WING BOT SURF DEPENDENT VARIABLE CP

2Y/BW	.2330	.3540	.4270	.5340	.6730	.7800	.8870	.9720
X/CW								
.177			-.3078					
.229	.0152							
.246		-.2060						
.250				-.3189	-.3394	-.5034	-.6864	
.274			-.2772					
.345								-.4131
.390		-.2393						
.400				-.2426	-.2641		-.4657	
.402			-.2067					
.503								-.3312
.550				-.3077	-.3502			
.565			-.7733					
.600							-.2822	
.637		-.2763						
.650						-.3036		
.670								-.2308
.700					-.3240			
.725				-.2658				
.750						-.0827	-.1917	
.760			-.2008					
.775				-.0354	-.1153			
.799		-.1885						
.808			-.1208					
.834	-.2090							
.839		-.1667						
.850				-.2376	-.2245	-.2981		
.857			-.2015					
.862								-.1178
.865	-.1446							
.979		-.1842						
.900	-.1664			-.1802			-.1036	
.905			-.1601					
.919		-.1277						
.950				-.0395	-.0492	-.0682		
.953			-.0337					
.955		-.0407						
.965	-.0094							
1.000			.0870		.0939		.0764	

TABULATED PRESSURE DATA - OA148 (AMES 11-073-1)

AMES 11-073(OA148) -140A/B/C/R ORB LEFT WING BOT (XEBL45)

ALPHA (2) = .010 BETA (1) = -3.868 MACH = .89660 Q = 597.56 P = 1061.9 RN/L = 3.6228

SECTION (1)LEFT WING BOT SURF DEPENDENT VARIABLE CP

2Y/BW	.2390	.3640	.4270	.5340	.6730	.7800	.8870	.9720
X/CW								
.010	.0367	.0620	.0906	-.6727	-.8355	-.7653	-.6387	
.020	.0000	.0666	-.0109	-.6208	-.7575	-.7714	-.8923	-.3160
.040		.0813	-.1781					
.050	-.0009			-.5402	-.5943	-.6693	-.7542	
.060								-.3635
.080				-.3591				
.081			-.2089					
.086		.0934						
.094	-.0087							
.150				-.2216	-.2330	-.2586	-.2624	
.157								-.2541
.163		.0171						
.177			-.1835					
.229	.0233							
.246		-.1336						
.250				-.1581	-.1955	-.2401	-.2581	
.274			-.1286					
.345								-.2723
.390		-.0992						
.400				-.1306	-.1394		-.2007	
.402			-.0893					
.503								-.3318
.550				-.1998	-.2162			
.565			-.8783					
.600							-.3182	
.637		-.1873						
.650						-.3168		
.670								-.2357
.700					-.2884			
.745				-.2245				
.749						-.1150	-.1912	
.760			-.1817					
.775				-.0462	-.0908			
.798		-.1465						
.808			-.1165					
.834	-.1757							
.839		-.1788						
.850				-.2164	-.1687	-.2665		
.857			-.2023					
.862								-.1496
.865	-.1127							
.879		-.1897						
.900	-.1561			-.1478			-.1335	
.905			-.1461					
.919		-.1116						

```
                                 AMES 11-073(OA148) -140A/B/C/R ORB LEFT WING BOT              (XEBL45)
ALPHA ( 2) =     .010    BETA  ( 1) =   -3.868
 SECTION ( 1)LEFT WING BOT SURF                DEPENDENT VARIABLE CP
2Y/BW        .2990   .3640   .4270   .5340   .6730   .7800   .8870   .9720

  X/CW
    .950                             -.0122  -.0492   .0070
    .953                      .0021
    .955             -.0128
    .955      .0219
   1.000                      .1307           .0897           .1192
ALPHA ( 2) =     .025    BETA  ( 2) =    .185   MACH   =  .89660     Q     =  597.56     P     =  1061.9     RN/L    =  3.6228
 SECTION ( 1)LEFT WING BOT SURF                DEPENDENT VARIABLE CP
2Y/BW        .2990   .3640   .4270   .5340   .6730   .7800   .8870   .9720

  X/CW
    .010      .0249   .1028   .1747  -.4731  -.6704  -.7112  -.6258
    .020      .0000   .1042   .0969  -.4783  -.5740  -.6220  -.7874  -.3133
    .040              .1185  -.0645
    .050      .0179                  -.3637  -.4639  -.5419  -.6497
    .063                                                              -.3289
    .080                             -.2824
    .081                     -.1276
    .086              .1270
    .094      .0062
    .150                             -.1845  -.2040  -.2356  -.3164
    .157                                                              -.2652
    .163              .0722
    .177                     -.1449
    .229      .0397
    .246             -.0957
    .250                             -.1419  -.1903  -.2285  -.2701
    .274                     -.1152
    .345                                                              -.3087
    .390             -.0904
    .400                             -.1343  -.1528          -.2204
    .402                     -.0911
    .503                                                              -.3341
    .550                             -.2055  -.2273
    .565                     -.8606
    .600                                                     -.3612
    .637             -.1960
    .650                                             -.3492
    .670                                                              -.2400
    .700                                     -.3494
    [illegible]                      -.2361
    .750                                             -.0989  -.1893
    .760                     -.1977
```

```
DATE 10 FEB 76            TABULATED PRESSURE DATA - OA148 ( AMES 11-073-1 )                                 PAGE 2275

                                AMES 11-073(OA148) -140A/3/C/R ORB LEFT WING BOT                 (XEBL45)

ALPHA ( 2) =     .025    BETA  ( 2) =     .185

 SECTION ( 1)LEFT WING BOT SURF                 DEPENDENT VARIABLE CP

2Y/BW        .2990    .3640    .4270    .5340    .6730    .7800    .8870    .9720

  X/CW
   .775                                 -.0422   -.0857
   .793              -.1564
   .808                       -.1209
   .834     -.1849
   .839              -.1865
   .850                                 -.2397   -.1955   -.2876
   .857                       -.2226
   .862                                                                    -.1281
   .865     -.1242
   .879              -.2092
   .900     -.1759                      -.1652                     -.1296
   .905                       -.1721
   .919              -.1349
   .950                                 -.0220   -.0344    .0016
   .953                       -.0249
   .955              -.0335
   .965      .0074
  1.000                        .1067              .1048             .1298
ALPHA ( 2) =     .019    BETA  ( 3) =    4.247   MACH   =  .89660    Q     =  597.56    P     =  1061.9    RN/L  =  3.6228

 SECTION ( 1)LEFT WING BOT SURF                 DEPENDENT VARIABLE CP

2Y/BW        .2990    .3640    .4270    .5340    .6730    .7800    .8870    .9720

  X/CW
   .010     -.0156    .0802    .2267   -.2960   -.5027   -.5641   -.5250
   .020      .0000    .1011    .1717   -.3584   -.4149   -.4797   -.6073   -.2868
   .040               .1163    .0189
   .050      .0127                      -.2513   -.3575   -.4011   -.4749
   .069                                                                    -.3195
   .080                                 -.2135
   .081                       -.0700
   .086               .1407
   .094      .0103
   .150                                 -.1470   -.1681   -.2055   -.2927
   .157                                                                    -.2602
   .163               .1042
   .177                       -.1013
   .229      .0483
   .245              -.0596
   .250                                 -.1250   -.1638   -.2064   -.2628
   .274                       -.0894
   .345                                                                    -.3393
   .330              -.0740
```

```
                              AMES 11-073(OA148) -140A/B/C/R ORB LEFT WING BOT             (XE6L45)
ALPHA ( 2) =      .019    BETA  ( 3) =    4.247
 SECTION ( 1)LEFT WING BOT SURF                  DEPENDENT VARIABLE CP
2Y/BW        .2990   .3640   .4270   .5340   .6730   .7800   .8870   9720

  X/CW
    .400                          -.1279  -.1489          -.2199
    .402                  -.0956
    .503                                                          -.3618
    .550                          -.2012  -.2332
    .565                  -.8914
    .600                                                  -.3877
    .627          -.1970
    .640                                          -.3497
    .670                                                          -.2686
    .700                                  -.3562
    .725                          -.2600
    .750                                          -.0790  -.1830
    .760                  -.2243
    .775                          -.0435  -.1136
    .793          -.1761
    .808                  -.1375
    .834  -.2002
    .839          -.1962
    .850                          -.2960  -.2569  -.3661
    .847                  -.2513
    .852                                                          -.1218
    .855  -.1462
    .879          -.2234
    .900  -.1907                  -.2012                  -.1432
    .905                  -.2044
    .919          -.1547
    .950                          -.0610  -.0477  -.0295
    .953                  -.0690
    .955          -.0650
    .965  -.0233
   1.000                   .0518           .0850           .1762
ALPHA ( 3) =    3.946   BETA  ( 1) =   -3.873  MACH   =  .83637    Q     =  599.08    P     =  1060.5    RN/L   =  7.5099
 SECTION ( 1)LEFT WING BOT SURF                  DEPENDENT VARIABLE CP
2Y/BW        .2990   .3640   .4270   .5340   .6730   .7800   .8870   .9720

  X/CW
    .010   .0152   .1138   .3944   .1026   .0380   .1317   .1476
    .020   .0000   .1623   .3319  -.0224   .0073  -.0005  -.0115  -.1073
    .040           .1915   .1618
    .050   .0588                  -.0347  -.0522  -.0393  -.0482
    .069                                                          -.1558
    .080                          -.0307
```

REPRODUCIBILITY OF THE
ORIGINAL PAGE IS POOR

```
DATE 10 FEB 76              TABULATED PRESSURE DATA - OA148 ( AMES 11-073-1 )

                                      AMES 11-073(OA148) -140A/B/C/R ORB LEFT WING BOT                  (XEBL45)

ALPHA ( 3) =     3.946    BETA  ( 1) =    -3.873

 SECTION ( 1)LEFT WING BOT SURF              DEPENDENT VARIABLE CP

2Y/BW          .2990   .3640   .4270   .5340   .6730   .7800   .8870   .9720

  X/CW
    .031                        .0593
    .055                .2260
    .094       .0582
    .150                                .0111  -.0068  -.0138  -.0715
    .157                                                               -.1878
     163                .1917
    .177                        .0188
    .229       .0942
    .246                .0347
    .250                                .0089  -.0191  -.0431  -.0952
    .274                        .0233
    .3-5                                                               -.2215
    .330                .0248
    .400                               -.0198  -.0232          -.1165
    .402                        .0157
    .503                                                               -.2863
    .550                               -.1130  -.1306
     565                       -.93
    .600                                                       -.2812
    .637               -.1042
    .650                                               -.2630
    .670                                                               -.2501
    .700                                       -.2361
    [illegible]                        -.1920
    [illegible]                                        -.0429  -.1416
    [illegible]                -.1617
    .775                               -.0196  -.0720
    .739               -.1250
    [illegible]                -.1183
    [illegible] -.1607
    .840               -.1918
    .850                               -.3034  -.3124  -.4048
    [illegible]                -.2563
    [illegible]                                                        -.3967
    .865      -.1072
    [illegible]        -.2252
    .900      -.1725                   -.199                   -.4766
    .925                       -.1877
    [illegible]        -.1310
    [illegible]                        -.0412  -.0647  -.2083
    .953                       -.0217
    .955               -.0180
    .965       .0184
   1.000                        .1320           .0984          -.1023
```

```
                              AMES 11-073(OA148) -140A/B/C/R CFB LEFT WING BOT                     (XEBL45)
ALPHA ( 3) =    4.002   BETA  ( 2) =     .184   MACH   =  .89837    Q     =  599.08    P     =  1060.5   RN/L   =  3.6099
 SECTION ( 1)LEFT WING BOT SURF                DEPENDENT VARIABLE CP
2Y/BW        .2090   .3640   .4270   .5340   .6730   .7800   .8870   .9720
  X/CW
    .010    -.0743  -.0140   .3674   .1848   .0941   .1677   .1605
    .020     .0000   .0907   .3461   .0618   .0630   .0487   .0258  -.2181
    .040                     .1294   .2141
    .050     .0180                   .0285  -.0074  -.0148  -.0225
    .063                                                            -.2356
    .080                                     .0136
    .081                             .1072
    .086             .2100
    .094     .0352
    .150                                     .0190   .0115  -.0096  -.0749
    .157                                                            -.2202
    .163             .2129
    .177                             .0452
    .229     .0896
    .245             .0611
    .250                                     .0135  -.0177  -.0426  -.1119
    .274                             .0311
    .345                                                            -.2731
    .390             .0418
    .400                                    -.0180  -.0331          -.1327
    .402                             .0166
    .503                                                            -.3515
    .550                                    -.1093  -.1389
    .565                            -.9371
    .600                                                    -.3034
    .637            -.1024
    .650                                                    -.2755
    .670                                                                    -.2700
    .700                                            -.2498
    .745                                    -.1953
    .750                                                    -.0494  -.1842
    .765                            -.1705
    .775                                    -.0206  -.0839
    .798            -.1365
    .808                            -.1142
    .834    -.1609
    .839            -.1887
    .850                                    -.2951  -.3065  -.3997
    .857                            -.2509
    .862                                                                    -.3603
    .865    -.1152
    .879            -.2316
    .900    -.1741                          -.2117                  -.4916
    .905                            -.1951
    .919            -.1506
```

AMES 11-073(OA148) -140A/B/C/R ORB LEFT WING BOT (XEBL45)

ALPHA (3) = 4.002 BETA (2) = .184

SECTION (1)LEFT WING BOT SURF DEPENDENT VARIABLE CP

2Y/BW	.2990	.3640	.4270	.5340	.6730	.7800	.8870	.9720
X/CW								
.950				-.0538	-.0540	-.1395		
.953			-.0371					
.955		-.0340						
.955	.0042							
1.000			.1148		.0997		-.0773	

ALPHA (3) = 3.937 BETA (3) = 4.239 MACH = .89837 Q = 599.08 P = 1060.5 RN/L = 3.6099

SECTION (1)LEFT WING BOT SURF DEPENDENT VARIABLE CP

2Y/BW	.2990	.3640	4270	.5340	.6730	.7800	.8870	.9720
X/CW								
.010	-.2122	-.1619	.2931	.2386	.1510	.2039	.1949	
.020	.0000	-.0178	.3184	.1358	.0960	.0971	.0668	-.3512
.040		.0434	.2307					
.050	-.0339			.0887	.0299	.0202	-.0023	
.059								-.3188
.080				.0564				
.081			.1283					
.086		.1698						
.094	.0024							
.150				.0401	.0192	-.0013	-.0776	
.157								-.2682
.163		.2102						
.177			.0673					
.229	.0667							
.246		.0577						
.250				.0214	-.0137	-.0439	-.1233	
.274			.0356					
.345								-.3176
.390		.0417						
.400				-.0253	-.0398		-.1550	
.402			.0084					
.503								-.3276
550				-.1128	-.1527			
.565			-.9723					
.600							-.3276	
.637		-.1110						
.650						-.2633		
.670								-.3111
.700					-.2603			
.725				-.2046				
.750						-.0555	-.2083	
.760			-.1770					

```
                              AMES 11-073(OA148) -140A/B/C/R ORB LEFT WING BOT           (XE8L45)

ALPHA ( 3) =    3.937   BETA  ( 3) =    4.239

 SECTION ( 1)LEFT WING BOT SURF            DEPENDENT VARIABLE CP

2Y/BW        .2990   .3640   .4270   .5340   .6730   .7800   .8870   .9720

  X/CW
   .775                              -.0158  -.0909
   .792              -.1368
   .808                      -.1217
   .834      -.1680
   .839              -.1835
   .850                              -.3208  -.2748  -.3984
   .857                      -.2662
   .862                                                              -.4019
   .865      -.1186
   .873              -.2277
   .900      -.1957                  -.2425                  -.4972
   .905                      -.2250
   .919              -.1719
   .950                              -.0929  -.0772  -.0921
   .953                      -.0791
   .955              -.0678
   .965      -.0300
  1.000                       .0697           .0556          -.0421
ALPHA ( 4) =    7.970   BETA  ( 1) =   -3.868   MACH   =  .89753    J     =  598.50     P      =  1061.4     RN/L   =  3.5937

 SECTION ( 1)LEFT WING BOT SURF            DEPENDENT VARIABLE CP

2Y/BW        .2990   .3640   .4270   .5340   .6730   .7800   .8870    9720

  X/CW
   .010      -.1662  -.1780   .4118   .4943   .4529   .5067   .4710
   .020       .0000   .0564   .4657   .3774   .3895   .3091   .3549  -.2790
   .040               .1206   .3808
   .050       .0375                   .2792   .2696   .2700   .2573
   .069                                                              -.1976
   .080                               .2256
   .081                       .2675
   .086               .2809
   .094       .0814
   .150                               .1914   .1902   .1850   .1097
   .157                                                              -.2016
   .163               .3246
   .177                       .1909
   .229       .1559
   .246               .1885
   .250                               .1527   .1364   .1143   .0392
   .274                       .1602
   .345                                                              -.1705
   .390               .1533
```

AMES 11-073(OA148) -140A/B/C/R ORB LEFT WING BOT (XEBL45)

ALPHA (4) = 7.970 BETA (1) = -3.868

SECTION (1)LEFT WING BOT SURF DEPENDENT VARIABLE CP

2Y/BW	.2990	.3640	.4270	.5340	.6730	.7800	.8870	.9720
X/CW								
.400				.0926	.0857		-.0172	
.402			.1268					
.503								-.2236
.550				-.0230	-.0453			
.565			-.6456					
.600							-.1829	
.637		-.0207						
.650						-.1686		
.670								-.2501
.700					-.2224			
.725				-.1587				
.750						-.0190	-.1452	
.760			-.1389					
.775				.0284	-.0780			
.798		-.1058						
.800			-.0902					
.834	-.1408							
.839		-.1878						
.850				-.3013	-.3389	-.3783		
.857			-.2758					
.862								-.4113
.865	-.0912							
.879		-.2598						
.900	-.1978			-.4640			-.4514	
.905			-.3309					
.919		-.2027						
.950				-.1301	-.3174	-.5326		
.953			-.0708					
.955		-.0634						
.965	-.0001							
1.000			.1096		-.0498		-.3583	

ALPHA (4) = 7.979 BETA (2) = .177 MACH = .89753 Q = 598.50 P = 1061.4 RN/L = 3.5937

SECTION (1)LEFT WING BOT SURF DEPENDENT VARIABLE CP

2Y/BW	.2990	.3640	.4270	.5340	.6730	.7800	.8870	.9720
X/CW								
.010	-.3634	-.3809	.2673	.4939	.4392	.4674	.4204	
.020	.0000	-.0940	.3923	.3950	.3832	.3780	.3355	-.4503
.040		-.0047	.3691					
.050	-.0404			.2952	.2748	.2670	.2390	
.060								-.2939
.080				.2409				

```
DATE 10 FEB 75          TABULATED PRESSURE DATA - OA148 ( AMES 11-073-1 )                          PAGE 2282

                              AMES 11-073(OA148) -140A/B/C/R ORB LEFT WING BOT             (XE8L45)

ALPHA ( 4) =    7.979   BETA  ( 2) =     .177

 SECTION ( 1)LEFT WING BOT SURF           DEPENDENT VARIABLE CP

2Y/BW        .2950   .3640   .4270   .5340   .6730   .7800   .8870   .9720

 X/CW
  .081                       .2758
  .086               .2197
  .094       .0345
  .150                               .1923   .1874   .1768   .0889
  .157                                                              -.2165
  .163               .3132
  .177                       .1996
  .229       .1294
  .246               .1823
  .250                               .1505   .1306   .1077   .0186
  .274                       .1604
  .345                                                              -.1905
  .390               .1569
  .400                               .0860   .0746          -.0388
  .402                       .1197
  .503                                                              -.2272
  .550                              -.0233  -.0507
  .555                      -.6614
  .600                                                      -.1932
  .637              -.0161
  .650                                              -.1745
  .670                                                              -.3005
  .700                                      -.2144
  .725                              -.1578
  .750                                              -.0235  -.1589
  .760                      -.1418
  .775                               .0239  -.0941
  .798              -.1073
  .808                      -.0917
  .834      -.1381
  .839              -.1713
  .850                              -.3075  -.3448  -.3826
  .857                      -.2689
  .862                                                              -.4871
  .865      -.0941
  .879              -.2540
  .900      -.1919                  -.4340                  -.4875
  .905                      -.3538
  .919              -.2162
  .950                              -.1301  -.2998  -.5294
  .953                      -.0905
  .955              -.0793
  .965      -.0292
 1.000                       .0913          -.0211          -.4456
```

DATE 10 FEB 75 TAPULATED PRESSURE DATA - OA148 (AMES 11-073-1)

AMES 11-073(OA148) -140A/B/C/R ORB LEFT WING BOT (XEBL45)

ALPHA (4) = 7.978 BETA (3) = 4.243 MACH = .89753 Q = 598.50 P = 1061.4 RN/L = 3.5937

SECTION (1)LEFT WING BOT SURF DEPENDENT VARIABLE CP

2Y/BW	.2990	.3640	.4270	.5340	.6730	.7800	.8870	.9720
X/CW								
.010	-.5428	-.3451	.0896	.4520	.4012	.4033	.3517	
.020	.0000	-.1692	.2539	.3865	.3621	.3522	.3033	-.5419
.040		-.0356	.3169					
.050	-.1228			.2997	.2711	.2546	.2208	
.053								-.4000
.060				.2425				
.081			.2599					
[illegible]		.1418						
[illegible]	-.0298							
.150				.1870	.1857	.1655	.0773	
.157								-.2531
.163		.2739						
.177			.1997					
[illegible]	.0913							
.245		.1654						
.250				.1428	.1212	.0987	.0048	
.274			.1531					
.345								-.2434
.390		.1480						
.400				.0736	.0646		-.0594	
402			.1090					
.503								-.2624
.550				-.0266	-.0575			
.565			-.7160					
.600							-.2112	
.637		-.0220						
.650						-.1879		
.670								-.3333
.700					-.2149			
.725				-.1475				
.750						-.0332	-.1892	
.760			-.1377					
.773				.0056	-.1172			
.798		-.1069						
.808			-.0980					
.834	-.1355							
[illegible]		-.1623						
[illegible]				-.3105	-.3424	-.3847		
[illegible]			-.2590					
[illegible]								-.5467
[illegible]	[illegible]							
[illegible]		-.2348						
[illegible]	-.1900			-.4136			-.4976	
[illegible]			-.3139					
[illegible]		-.2253						

```
                                AMES 11-073(OA148) -140A/B/C/R ORB LEFT ' N. . )T          (XE8L45)

ALPHA ( 4) =    7.978    BETA  ( 3) =    4.243

 SECTION ( 1)LEFT WING BOT SURF            DEPENDENT VARIABLE CP

2Y/BW        .2990    .3640    .4270    .5340    .6730    .7800    .8870    .9720

  X/CW
   .950                                 -.1470   -.2161   -.5157
   .953                        -.1197
   .955               -.1046
   .965     -.0450
  1.000                         .0444            -.0096            -.4875

ALPHA ( 5) =   11.950    BETA  ( 1) =   -3.856   MACH   =  .89653     Q     =  597.97     P     =  1062.9     RN/L   =  3.5855

 SECTION ( 1)LEFT WING BOT SURF            DEPENDENT VARIABLE CP

2Y/BW        .2990    .3640    .4270    .5340    .6730    .7800    .8870    .9720

  X/CW
   .010    -.4726   -.5717    .2016    .62 4    .6025    .5872    .5261
   .020     .0000   -.1391    .4120    .5742    .5702    .5603    .5089   -.3949
   .040             -.0287    .4851
   .050    -.0130                      .4712    .4665    .4616    .4267
   .069                                                                   -.2322
   .080                                .4063
   .081                       .4113
   .086              .2775
   .094     .0797
   .150                                .3355    .3438    .3363    .2553
   .157                                                                   -.2012
   .163              .4170
   .177                       .3261
   .203     .2070
   .246              .3040
   .250                                .2754    .2695    .2442    .1715
   .274                       .2736
   .345                                                                   -.1005
   .390              .2617
   .400                                .1908    .1885             .0839
   .462                       .2203
   .503                                                                   -.1589
   .550                                .0705    .0429
   .565                      -.6099
   .600                                                          -.0970
   .637              .0678
   .650                                                 -.0920
   .670                                                                   -.2435
   .700                                        -.1472
   .725                               -.0917
   .750                                                  .0174   -.1046
   .760                      -.1100
```

AMES 11-073(OA148) -140A/B/C/R ORB LEFT WING BOT (XEBL45)

ALPHA (5) = 11.950 BETA (1) = -3.856

SECTION (1)LEFT WING BOT SURF DEPENDENT VARIABLE CP

2Y/BW	.2990	.3640	.4270	.5340	.6730	.7800	.8870	.9720
X/CW								
.775				.0893	-.0584			
.798		-.0721						
.808			-.0412					
.834	-.1135							
.839		-.1521						
.850				-.2738	-.3234	-.3464		
.857			-.2300					
.862								-.4440
.865	-.0607							
.879		-.2419						
.900	-.1949			-.4298			-.4200	
.905			-.3953					
.919		-.3160						
.950				-.4905	-.4218	-.5007		
.953			-.2123					
.955		-.1592						
.965	-.0746							
1.000			-.0151		-.3170		-.5504	

ALPHA (5) = 11.951 BETA (2) = .178 MACH = .89553 Q = 597.97 P = 1062.9 RN/L = 3.5856

SECTION (1)LEFT WING BOT SURF DEPENDENT VARIABLE CP

2Y/BW	.2990	.3640	.4270	.5340	.6730	.7800	.8870	.9720
X/CW								
.010	-.6306	-.4206	-.0075	.5434	.5215	.4755	.4121	
.020	.0000	-.2149	.2627	.5263	.5187	.4978	.4319	-.5752
.040		-.1159	.4132					
.060	-.1158			.4521	.4494	.4210	.3737	
.079								-.3847
.080				.3910				
.091			.3832					
.103		.1860						
.104	.0057							
.150				.3164	.3282	.3185	.2145	
.157								-.2660
.163		.3666						
.177			.3173					
.229	.1692							
.246		.2785						
.250				.2622	.2469	.2294	.1342	
.274			.2657					
.345								-.1805
.390		.2518						

```
                                AMES 11-073(OA148) -140A/B/C/R ORB LEFT WING BOT              (XEEL45)
ALPHA ( 5) =    11.951    BETA  ( 2) =      .178
 SECTION ( 1)LEFT WING BOT SURF                      DEPENDENT VARIABLE CP
2Y/BW        .2990     .3640     .4270     .5340     .6730     .7800     .8870     .9720

 X/CW
   .400                                     .1774     .1734               .0508
   .402                          .2113
   .533                                                                             -.2288
   .550                                     .0618     .0391
   .555                         -.6251
   .600
   .647               .0601                                              -.1189
   .650
   .675                                                         -.1025
   .700                                                                             -.2955
   .725                                              -.1507
   .750                                    -.0932
   .760                         -.1143                           .0022   -.1390
   .775                                     .0788    -.0820
   .778              -.0753
   .809                         -.0549
   .814    -.1131
   .823              -.1444
   .850                                    -.2710    -.3289    -.3553
   .857                         -.2363
   .862
   .865    -.0644                                                                   -.5085
   .879              -.2329
   .900    -.1974                          -.4170                        -.4520
   .905                         -.3762
   .919              -.2745
   .950                                    -.4502    -.4299    -.5039
   .953                         -.2457
   .955              -.1633
   .965    -.1003
  1.000                         -.0565               -.2799              -.5799
ALPHA ( 5) =    11.950    BETA  ( 3) =     4.259   MACH   =  .89553     Q     =  597.97     P     =  1032.9     RN/L   =  3.5656
 SECTION ( 1)LEFT WING BOT SURF                      DEPENDENT VARIABLE CP
2Y/BW        .2990     .3640     .4270     .5340     .6730     .7800     .8870     .9720

 X/CW
   .010    -.7987    -.3869    -.2313     .4359     .4251     .3454     .2934
   .020     .0000    -.3125     .0873     .4607     .4510     .4208     .3502    -.7177
   .040              -.2276     .3211
   .050    -.2171                          .4154     .4090     .3728     .3248
   .060
   .080                                                                             -.4913
                                           .3524
```

REPRODUCIBILITY OF THE
ORIGINAL PAGE IS POOR

AMES 11-073(OA148) -140A/B/C/R ORB LEFT WING BOT (XEBL45)

ALPHA (5) = 11.950 BETA (3) = 4.259

SECTION (1)LEFT WING BOT SURF DEPENDENT VARIABLE CP

2Y/BW	.2930	.3640	.4270	.5340	.6730	.7800	.8870	.9720
X/CW								
.081			.3389					
.086		.1019						
.094	-.0726							
.150				.2970	.3018	.2844	.1845	
.157								-.3150
.163		.3134						
.177			.3022					
.229	.1065							
.246		.2450						
.260				.2440	.2241	.2021	.1039	
.274			.2550					
.345								-.2406
.390		.2370						
.400				.1698	.1496		.0141	
.402			.1958					
.503								-.2708
.550				.0512	.0173			
.555			-.6202					
.600							-.1528	
.637		.0567						
.650						-.1284		
.670								-.3347
.700					-.1672			
.725				-.1048				
.750						-.0123	-.1803	
.760			-.1110					
[illegible]				.0631	-.1065			
[illegible]		-.0899						
[illegible]			-.0566					
[illegible]	-.1145							
[illegible]		-.1094						
[illegible]				-.2829	-.3367	-.3651		
[illegible]			-.2252					
[illegible]								-.5763
[illegible]	-.0504							
[illegible]		-.2236						
[illegible]	-.1753			-.4118			-.4731	
[illegible]			-.3457					
[illegible]		-.2637						
[illegible]				-.4299	-.4133	-.4976		
[illegible]			-.2560					
[illegible]		-.1990						
.985	-.0998							
1.000			-.0890		-.2435		-.6260	

```
DATE 10 FEB 75           TABULATED PRESSURE DATA - OA148 ( AMES 11-073-1 )                               PAGE 2288

                                   AMES 11-073(OA148) -140A/B/C/R ORB LEFT WING BOT                (XEBL46)   ( 05 AUG 75  )
                REFERENCE DATA
                                                                                                    PARAMETRIC DATA
SREF  =  2690.0000 SQ.FT.   XMRP  =  1076.6800 IN. XO
LREF  =   474.8000 IN.      YMRP  =      .0000 IN. YO                           RUDDER =      .000   SPDBRK =    55.000
BREF  =   936.0680 IN.      ZMRP  =   375.0000 IN. ZO                           BDFLAP =    22.500   L-ELVN =     4.000
SCALE =      .0300                                                              R-ELVN =     4.000   MACH   =      .600

ALPHA ( 1) =    -4.081    BETA  ( 1) =    -7.851   MACH   =  .59592     Q     =  593.39    P     =  2387.4    RN/L   =  4.8516

SECTION ( 1)LEFT WING BOT SURF               DEPENDENT VARIABLE CP

2Y/BW          .2990   .3640   .4270   .5340   .6730   .7800   .8870   .9720

 X/CW
  .010        -.2919  -.6442 -1.3551 -2.1379 -2.0950 -1.7257 -1.7512
  .020         .0000  -.5701 -1.1315 -1.9765 -2.0256 -1.4059 -1.7543  -.8987
  .040                -.5239  -.9650
  .050        -.2458                  -.9295  -.9360 -1.1048 -1.0980
  .063                                                                -.7799
  .080                                -.6877
  .081                        -.6071
  .085                -.3439
  [illegible] -.2253
  .150                                -.4243  -.4520  -.5202  -.4772
  .157                                                                -.3165
  .163                -.3712
  .177                        -.3592
  .220        -.1784
  .246                -.3634
  .250                                -.2871  -.3162  -.3480  -.3295
  .274                        -.2586
  .345                                                                -.3090
  .390                -.2270
  .400                                -.1932  -.2069          -.2284
  .412                        -.1677
  .503                                                                -.2816
  .550                                -.1868  -.1913
  .555                        -.2087
  .600                                                        -.2087
  .637                -.1850
  .650                                                -.1849
  .670                                                                -.2509
  .700                                        -.1751
  .725                                -.1446
  .750                                                -.1405  -.1806
  .760                        -.1503
  .775                                -.1263  -.1145
  .798                -.1146
  .809                        -.1387
  [illegible] -.1371
  [illegible]         -.1823
  [illegible]                         -.1657  -.1328  -.1731
```

AMES 11-073(OA148) -140A/B/C/R ORB LEFT WING BOT (XE8L46)

ALPHA (1) = -4.081 BETA (1) = -7.851

SECTION (1)LEFT WING BOT SURF DEPENDENT VARIABLE CP

2Y/BW	.2990	.3640	.4270	.5340	.6730	.7800	.8870	.9720
X/CW								
.857			-.1546					
.862								-.1868
.865	-.1393							
.879		-.1580						
.890	-.1277			-.1379			-.1234	
.905			-.1380					
.919		-.1196						
.950				-.0502	-.0739	-.0449		
.953			-.0485					
.955		-.0546						
.965	-.0094							
1.000			.0638		.0095		.0538	

ALPHA (1) = -3.953 BETA (2) = -3.833 MACH = .59592 Q = 593.39 P = 2387.4 RN/L = 4.8516

SECTION (1)LEFT WING BOT SURF DEPENDENT VARIABLE CP

2Y/BW	.2990	.3640	.4270	.5340	.6730	.7800	.8870	.9720
X/CW								
.010	-.1839	-.4141	-.7719	-2.0089	-2.0616	-2.0745	-1.9781	
.020	.0000	-.3664	-.8271	-1.6147	-1.8391	-1.6039	-1.8387	-.7885
.040		-.3184	-.7412					
.050	-.1697			-.8438	-.8845	-1.0056	-.9593	
.063								-.6223
.080				-.6245				
.081			-.5085					
.098		-.2150						
.144	-.1516							
.150				-.3851	-.4181	-.4433	-.4287	
.157								-.2884
.164		-.2746						
.177			-.3235					
.229	-.1183							
.246		-.3032						
.250				-.2609	-.3032	-.3218	-.3105	
.274			-.2320					
.295								-.2611
.330		-.1982						
.400				-.1791	-.1924		-.2124	
.433			-.1549					
.503								-.2547
.550				-.1816	-.1910			
.565			-.1885					
.600							-.2017	

```
                         AMES 11-073(OA148) -140A/B/C/R ORB LEFT WING BOT              (XE6L46)

ALPHA ( 1) =    -3.953    BETA  ( 2) =    -3.833

 SECTION ( 1)LEFT WING BOT SURF            DEPENDENT VARIABLE CP

2Y/BW        .2990   .3640   .4270   .5340   .6730   .7800   .8870   .9720

  X/CW
    .637             -.1760
    .650                                             -.1850
    .670                                                             -.2282
    .700                                     -.1816
    .725                             -.1523
    .750                                             -.1371  -.1777
    .760                     -.1416
    .775                             -.1289  -.1160
    .798             -.1167
    .809                     -.1248
    .824     -.1352
    .829             -.1771
    .850                             -.1704  -.1405  -.1850
    .857                     -.1595
    .862                                                             -.1697
    .865     -.1300
    .879             -.1573
    .900     -.1240                  -.1442                  -.1259
    .905                     -.1416
    .919             -.1198
    .950                             -.0537  -.0700  -.0497
    .953                     -.0461
    .955             -.0585
    .965     -.0217
   1.000                      .0676           .0303           .0491
ALPHA ( 1) =    -3.951    BETA  ' 3) =      .189   MACH   =  .59592    Q      =  593.39     P      =  2387.4     RN/L   =  4.8516

 SECTION ( 1)LEFT WING BOT SURF            DEPENDENT VARIABLE CP

2Y/BW        .2990   .3640   .4270   .5340   .6730   .7800   .8870   .9720

  X/CW
    .010     -.0906  -.2138  -.5254 -1.7146 -1.8051 -2.1558 -1.9308
    .020      .0000  -.1901  -.5886 -1.2909 -1.4402 -1.5765 -1.7695  -.6904
    .040             -.1717  -.5431
    .050     -.0968                  -.7391  -.8127  -.8748  -.8953
    .063                                                             -.5169
    .080                             -.5523
    .081                     -.4132
    .086             -.1177
    .094     -.0927
    .150                             -.3519  -.3784  -.4002  -.4023
    .157                                                             -.2684
    .163             -.1840
```

AMES 11-073(OA148) -140A/B/C/R ORB LEFT WING BOT (XEBL46)

ALPHA (1) = -3.951 BETA (3) = .188

SECTION (1)LEFT WING BOT SURF DEPENDENT VARIABLE CP

2Y/BW	.2990	.3640	.4270	.5340	.6730	.7800	.8870	.9720
X/CW								
.177			-.2839					
.229	-.0711							
.246		-.2572						
.250				-.2335	-.2797	-.2934	-.2903	
.274			-.2131					
.345								-.2290
.390		-.1778						
.400				-.1759	-.1818		-.1967	
.402			-.1491					
.503								-.2276
.550				-.1759	-.1813			
.565			-.1615					
.600							-.1872	
.637		-.1695						
.650						-.1741		
.670								-.2037
.700					-.1780			
.725				-.1521				
.750						-.1253	-.1614	
.760			-.1472					
.775				-.1198	-.1113			
.799		-.1139						
.808			-.1262					
.834	-.1331							
.839		-.1699						
.850				-.1676	-.1408	-.1828		
.857			-.1653					
.862								-.1341
.865	-.1246							
.873		-.1573						
.900	-.1293			-.1450			-.1148	
.905			-.1422					
.913		-.1210						
.950				-.0562	-.0642	-.0474		
.953			-.0540					
.965		-.0509						
.975	-.0233							
1.000			.0634		.0462		.0544	

AMES 11-073(OA148) -140A/B/C/R ORB LEFT WING BOT (XEBL46)

ALPHA (1) = -3.958 BETA (4) = 4.269 MACH = .59592 Q = 593.39 P = 2387.4 RN/L = 4.8516

SECTION (1)LEFT WING BOT SURF DEPENDENT VARIABLE CP

2Y/BW	.2930	.3640	.4270	.5340	.6730	.7800	.8870	.9720
X/CW								
.010	-.0197	-.0837	-.3173	-1.3469	-1.4712	-1.8191	-1.6435	
.020	.0000	-.0655	-.3819	-1.0740	-1.1552	-1.2561	-1.4996	-.5162
.040		-.0624	-.4016					
.050	-.0433			-.6179	-.6839	-.7611	-.7810	
.069								-.3819
.080				-.4654				
.081			-.3216					
.086		-.0423						
.094	-.0525							
.150				-.2966	-.3292	-.3516	-.3569	
.157								-.2340
.163		-.1083						
.177			-.2404					
.229	-.0359							
.245		-.2078						
.250				-.2147	-.2490	-.2591	-.2587	
.274			-.1811					
.345								-.1849
.390		-.1545						
.400				-.1576	-.1660		-.1763	
.402			-.1394					
.503								-.1852
.550				-.1609	-.1681			
.565			-.1823					
.600							-.1744	
.637		-.1524						
.650						-.1658		
.670								-.1697
.700					-.1806			
.725				-.1500				
.750						-.1137	-.1497	
.760			-.1409					
.775				-.1124	-.1059			
.794		-.1157						
.808			-.1232					
.834	-.1355							
.849		-.1617						
.850				-.1686	-.1424	-.1781		
.857			-.1528					
.862								-.1001
.865	-.1265							
.873		-.1525						
.900	-.1231			-.1450			-.1084	
.905			-.1411					
.919		-.1215						

```
                              AMES 11-073(OA148) -140A/B/C/R ORB LEFT WING BOT            (XE8L46)

ALPHA ( 1) =    -3.558    BETA  ( 4) =    4.269

 SECTION ( 1)LEFT WING BOT SURF                DEPENDENT VARIABLE CP

2Y/BW        .2390    .3640    .4270    .5340    .6730    .7800    .8870    .9720

  X/CW
   .950                                 -.0531   -.0581   -.0446
   .953                        -.0542
   .955               -.0632
   .965      -.0328
  1.000                         .0623             .0605             .0753

ALPHA ( 1) =    -3.973    BETA  ( 5) =    8.335   MACH  =  .59592    Q    =  593.39    P    =  2387.4    RN/L  =  4.8516

 SECTION ( 1)LEFT WING BOT SURF                DEPENDENT VARIABLE CP

2Y/BW        .2390    .3640    .4270    .5340    .6730    .7800    .8870    .9720

  X/CW
   .010      -.0191    .0206   -.1109   -.9646  -1.1811  -1.4344  -1.3658
   .020       .00 ?    .0185   -.1611   -.7962   -.8768  -1.0138  -1.2211   -.3967
   .040                .0256   -.2430
   .050      -.0276                     -.4680   -.5626   -.6423   -.6849
   .063                                                                     -.2997
   .080                                 -.3732
   .091                        -.2290
   .096                .0251
   .094      -.0294
   .150                                 -.2488   -.2839   -.2991   -.3265
   .157                                                                     -.2100
   .163               -.0413
   .177                        -.1842
   .223      -.0140
   .245               -.1519
   .250                                 -.1795   -.2155   -.2308   -.2326
   .274                        -.1513
   .345                                                                     -.1588
   .390               -.1323
   .400                                 -.1364   -.1460            -.1588
   .402                        -.1185
   .503                                                                     -.1630
   .550                                 -.1547   -.1562
   .575                        -.2316
   .600                                                            -.1609
   .637               -.1555
   .650                                                   -.1482
   .670                                                                     -.1435
   .700                                          -.1663
   .735                                 -.1413
   [illegible]                                            -.1038   -.1334
   [illegible]                 -.1335
```

AMES 11-073(OA148) -140A/B/C/R ORB LEFT WING BOT (XE8L46)

ALPHA (1) = -3.973 BETA (5) = 8.335

SECTION (1)LEFT WING BOT SURF DEPENDENT VARIABLE CP

2Y/BW	.2990	.3640	.4270	.5340	.6730	.7800	.8870	.9720
X/CW								
.775				-.1002	-.1015			
.793		-.1143						
.808			-.1116					
.834	-.1295							
.839		-.1566						
.850				-.1644	-.1361	-.1728		
.857			-.1468					
.862								-.0710
.865	-.1126							
.879		-.1526						
.900	-.1189			-.1333			-.0986	
.905			-.1302					
.919		-.1214						
.950				-.0478	-.0548	-.0423		
.953			-.0520					
.955		-.0699						
.985	-.0370							
1.000			.0558		.0745		.0851	

ALPHA (2) = .060 BETA (1) = -7.888 MACH = .59634 Q = 594.08 P = 2386.3 RN/L = 4.8479

SECTION (1)LEFT WING BOT SURF DEPENDENT VARIABLE CP

2Y/BW	.2990	.3640	.4270	.5340	.6730	.7800	.8870	.9720
X/CW								
.010	.0010	-.0218	-.1229	-.8652	-.8599	-.7954	-.6266	
.020	.0000	-.0587	-.2625	-.8004	-.6675	-.7014	-.7049	-.1681
.040		-.0525	-.3356					
.050	-.0408			-.4778	-.4528	-.4699	-.4561	
.069								-.1436
.080				-.3641				
.081			-.2725					
.086		-.0236						
.094	-.0583							
.150				-.2140	-.2109	-.1992	-.2063	
.157								-.1743
.163		-.1050						
.177			-.1829					
.222	-.0339							
.246		-.1716						
.250				-.1324	-.1532	-.1651	-.1526	
.274			-.1241					
.325								-.1221
.330		-.1032						

```
                              AMES 11-073(OA148) -140A/B/C/R ORB LEFT WING BOT              (XEBL46)

ALPHA ( 2) =      .060    BETA  ( 1) =   -7.388

 SECTION ( 1)LEFT WING BOT SURF              DEPENDENT VARIABLE CP

2Y/BW        .2990   .3640   .4270   .5340    6730   .7800   .8870   .9720

  X/CW
    .400                         -.0997  -.1030          -.1165
    .402                 -.0740
    .503                                                         -.1654
    .550                         -.1249  -.1299
    .565                 -.2691
    .600                                                 -.1534
    .637         -.1309
    .650                                         -.1402
    .670                                                         -.1713
    .700                                 -.1476
    .725                         -.1199
    .750                                         -.1042  -.1405
    .760                 -.1224
    .775                         -.0889  -.0844
    .798         -.0923
    .809                 -.1086
    .834 -.1155
    .843         -.1640
    .850                         -.1540  -.1280  -.1750
    .857                 -.1412
    .862                                                         -.1460
    .865 -.1121
    .879         -.1420
    .900 -.1071                  -.1309                  -.1260
    .905                 -.1260
    .919         -.1111
    .950                         -.0463  -.0521  -.0521
    .953                 -.0373
    .955         -.0471
    .965 -.0001
   1.000                  .0794           .0326           .0500

ALPHA ( 2) =      .070    BETA  ( 2) =   -3.865   MACH   =  .59634     Q      =  594.08     P      =  2386.3     RN/L    =  4.8479

 SECTION ( 1)LEFT WING BOT SURF              DEPENDENT VARIABLE CP

2Y/BW        .2990   .3640   .4270   .5340   .6730   .7800   .8870   .9720

  X/CW
    .010  .0192   .0425   .0031  -.6692  -.7004  -.6454  -.5138
    .020  .0000   .0156  -.1145  -.6330  -.5694  -.5832  -.6029  -.1405
    .040          .0258  -.2335
    .100 -.0137                  -.3931  -.3764  -.4255  -.3971
    .150                                                         -.1488
    .200                         -.2974
```

AMES 11-073(OA148) -140A/B/C/R ORB LEFT WING BOT (XE8L46)

ALPHA (2) = .070 BETA (2) = -3.865

SECTION (1)LEFT WING BOT SURF DEPENDENT VARIABLE CP

2Y/BW	.2930	.3640	.4270	.5340	.6730	.7800	.8870	.9720
X/CW								
.081			-.2133					
.085		.0293						
.094	-.0276							
.150				-.1803	-.1857	-.1827	-.1959	
.157								-.1675
.163		-.0474						
.177			-.1502					
.229	-.0145							
.245		-.1369						
.250				-.1216	-.1481	-.1498	-.1565	
.274			-.1098					
.345								-.1207
.390		-.0880						
.400				-.0988	-.1001		-.1174	
.402			-.0715					
.503								-.1613
.550				-.1262	-.1283			
.565			-.2407					
.600							-.1526	
.637		-.1291						
.650						-.1397		
.670								-.1727
.700					-.1532			
.725				-.1257				
.750						-.0982	-.1424	
.760			-.1278					
.775				-.0955	-.0824			
.798		-.0337						
.808			-.1060					
.834	-.1158							
.840		-.1648						
.850				-.1590	-.1311	-.1770		
.857			-.1440					
.862								-.1405
.865	-.1059							
.879		-.1483						
.900	-.1142			-.1390			-.1230	
.905			-.1335					
.919		-.1179						
.950				-.0450	-.0521	-.0488		
.953			-.0444					
.955		-.0598						
.965	-.0138							
1.000			.0731		.0573		.0570	

AMES 11-073(OA148) -140A/B/C/R ORB LEFT WING BOT (XEBL46)

ALPHA (2) = .070 BETA (3) = .181 MACH = .59634 Q = 594.08 P = 2386.3 RN/L = 4.8479

SECTION (1)LEFT WING BOT SURF DEPENDENT VARIABLE CP

2Y/BW	.2990	.3640	.4270	.5340	.6730	.7800	.8870	.9720
X/CW								
.010	.0110	.0689	.0982	-.4922	-.5495	-.5406	-.4646	
.020	.0000	.0602	.0209	-.4863	-.4492	-.4989	-.5146	-.1468
.040		.0755	-.1223					
.050	-.0033			-.2974	-.3280	-.3651	-.3580	
.069								-.1409
.080				-.2495				
.081			-.1521					
.085		.0734						
.094	-.0106							
.150				-.1561	-.1571	-.1695	-.1940	
.157								-.1729
.163		.0017						
.177			-.1202					
.229	.0051							
.245		-.1068						
.250				-.1098	-.1387	-.1502	-.1547	
.274			-.0964					
.345								-.1219
.390		-.0721						
.400				-.0946	-.0974		-.1174	
.402			-.0695					
.503								-.1640
.550				-.1224	-.1311			
.555			-.2272					
.570							-.1601	
.637		-.1210						
.650						-.1438		
.670								-.1740
.700					-.1587			
.726				-.1297				
.750						-.1019	-.1483	
.770			-.1254					
.775				-.1000	-.0934			
.798		-.0950						
[illegible]			-.1092					
[illegible]	-.1176							
[illegible]		-.1623						
[illegible]				-.1664	-.1394	-.1818		
[illegible]			-.1511					
[illegible]								-.1405
[illegible]	-.1076							
[illegible]		-.1542						
[illegible]	-.1219			-.1454			-.1272	
[illegible]			-.1447					
[illegible]		-.1254						

```
DATE 10 FEB 76              TABULATED PRESSURE DATA - OA148 ( AMES 11-073-1 )                                          PAGE 2298

                                      AMES 11-073(OA148) -140A/B/C/R ORB LEFT WING BOT                   (XEBL46)

ALPHA ( 2) =      .070    BETA  ( 3) =      .181

 SECTION ( 1)LEFT WING BOT SURF                 DEPENDENT VARIABLE CP

2Y/BW        .2990   .3640   .4270   .5340   .6730   .7800   .8870   .9720

  X/CW
    .950                             -.0588  -.0640  -.0589
    .953                     -.0569
    .955             -.0707
    .965     -.0274
   1.000                      .0692           .0628           .0659

ALPHA ( 2) =      .068    BETA  ( 4) =     4.248  MACH    =   .59534     Q      =  594.09      P      =  2395.3      RN/L   =  4.8479

 SECTION ( 1)LEFT WING BOT SURF                 DEPENDENT VARIABLE CP

2Y/BW        .2990   .3640   .4270   .5340   .6730   .7800   .8870   .9720

  X/CW
    .010     -.0295   .0459   .1650  -.3034  -.3950  -.3648  -.3000
    .020      .0000   .0577   .0999  -.3368  -.3280  -.3545  -.3562  -.1370
    .040              .0770  -.0311
    .050     -.0066                  -.2177  -.2429  -.2731  -.2821
    .069                                                             -.1521
    .080                             -.1845
    .081                     -.0931
    .086              .0907
    .094     -.0091
    .150                             -.1218  -.1303  -.1377  -.1618
    .157                                                             -.1647
    .163              .0414
    .177                     -.0862
    .229      .0143
    .246             -.0767
    .250                             -.0912  -.1119  -.1300  -.1332
    .274                     -.0789
    .345                                                             -.1235
    .390             -.0523
    .400                             -.0855  -.0898          -.1162
    .412                     -.0634
    .503                                                             -.1604
    .540                             -.1132  -.1263
    .545                     -.2421
    .600                                                     -.1547
    .637             -.1123
    .650                                             -.1399
    .670                                                             -.1778
    .700                                     -.1563
    .725                             -.1250
    .750                                             -.1028  -.1446
    .780                     -.1247
```

REPRODUCIBILITY OF THE
ORIGINAL PAGE IS POOR

AMES 11-073(OA148) -140A/B/C/R ORB LEFT WING BOT (XEBL46)

ALPHA (2) = .068 BETA (4) = 4.248

SECTION (1)LEFT WING BOT SURF DEPENDENT VARIABLE CP

2Y/BW	.2330	.3040	.4270	.5340	.6730	.7800	.8870	.9720
X/CW								
.775				-.0937	-.0952			
.798		-.0964						
.808			-.1067					
.834	-.1133							
.8[illegible]9		-.1507						
.850				-.1665	-.1427	-.1844		
.857			-.1501					
.862								-.1354
.865	-.1047							
.873		-.1476						
.900	-.1173			-.1464			-.1301	
.905			-.1421					
.919		-.1191						
.950				-.0591	-.0402	-.0531		
.953			-.0606					
.955		-.0701						
.965	-.0381							
1.000			.0596		.0702		.0743	

ALPHA (2) = .063 BETA (5) = 8.306 MACH = .59634 Q = 594.08 P = 2386.3 RN/L = 4.8479

SECTION (1)LEFT WING BOT SURF DEPENDENT VARIABLE CP

2Y/BW	.2330	.3040	.4270	.5340	.6730	.7800	.8870	.9720
X/CW								
.010	-.1071	-.0424	.1980	-.1570	-.2628	-.2289	-.1952	
.020	.0000	.0136	.1643	-.1934	-.2018	-.2630	-.2663	-.1728
.[illegible]		.0394	.0496					
.[illegible]	-.0437			-.1356	-.1704	-.2118	-.2194	
.[illegible]								-.1820
.060				-.1290				
.081			-.0311					
.[illegible]		.0310						
.[illegible]	-.0300							
.150				-.0963	-.1016	-.1111	-.1498	
.157								-.1804
.183		.0725						
.[illegible]			-.0572					
.223	.0078							
.245		-.0490						
.250				-.0774	-.0985	-.1114	-.1325	
.274			-.0508					
.345								-.1402
.390		-.0496						

```
                              AMES 11-073(OA148) -140A/B/C/R ORB LEFT WING BOT               (XEBL45)

ALPHA ( 2) =      .093    BETA  ( 5) =    8.306

SECTION ( 1)LEFT WING BOT SURF               DEPENDENT VARIABLE CP

2Y/BW        .2930   .3640   .4270   .5340   .6730   .7800   .8870   .9720

  X/CW
   .400                              -.0793  -.0786          -.1093
   .422                      -.0539
   .513                                                              -.1706
   .557                              -.1105  -.1202
   .565                      -.2633
   .600                                                      -.1493
   .617              -.1085
   .650                                              -.1352
   .675                                                              -.1847
   .700                                      -.1529
   .725                              -.1264
   .750                                              -.0920  -.1455
   .760                      -.1215
   .775                              -.0862  -.0941
   .798              -.0978
   .818                      -.1010
   .830      -.1176
   .843              -.1429
   .850                              -.1592  -.1362  -.1742
   .857                      -.1453
   .862                                                              -.1363
   .865      -.1024
   .879              -.1469
   .900      -.1171                  -.1416                  -.1200
   .905                      -.1400
   .919              -.1235
   .950                              -.0570  -.0371  -.0504
   .953                      -.0646
   .955              -.0705
   .965      -.0440
  1.000                       0558            .0787           .0815
ALPHA ( 3) =     4.012    BETA  ( 1) =   -7.931   MACH   =  .53704     Q      =  595.39     P      =  2386.0    RN/L   =  4.8E+09

SECTION ( 1)LEFT WING BOT SURF               DEPENDENT VARIABLE CP

2Y/BW        .2930   .3640   .4270   .5340   .6730   .7800   .8870   .9720

  X/CW
   .010      .0848   .1451   .3355   .0407   .0672   .1955   .2511
   .020      .0000   .1505   .2425  -.0724   .0294   .0473   .1070   .0137
   .040              .1609   .0595
   .050      .0689                   -.0624  -.0273  -.0048   .0356
[illegible]                                                          -.0068
[illegible]                          -.0545
```

3(OA148) -140A/B/C/R ORB LEFT WING BOT (XE8L46)

ALPHA (3) = 4.012 BETA (1)

SECTION (1)LEFT WING BOT SURF DEPENDENT VARIABLE CP

2Y/BW	.2930	.3640	.4270	.5340	.6730	.7800	.8870	.9720
X/CW								
.081			-.0045					
.095		.1658						
.094	.0539							
.150				-.0090	.0008	.0247	-.0002	
.157								-.1133
.163		.0939						
.177			-.0054					
.229	.0634							
.246		-.0107						
.250				.0069	-.0029	-.0005	-.0127	
.274			.0043					
.345								-.0522
.390		.0077						
.400				-.0071	-.0050		-.0253	
.402			.0078					
.503								-.1228
.550				-.0634	-.0581			
.565			-.2839					
.600							-.1022	
.637		-.0710						
.650						-.0909		
.670								-.1639
.700					-.1153			
.725				-.0854				
.750						-.0693	-.1086	
.760			-.0926					
.775				-.0605	-.0527			
.798		-.0576						
.808			-.0794					
.824	-.0880							
.839		-.1319						
.850				-.1347	-.1127	-.1684		
.857			-.1199					
.862								-.1880
.865	-.0801							
.879		-.1208						
.900	-.0887			-.1262			-.1402	
.905			-.1166					
.919		-.0947						
.950				-.0458	-.0363	-.0561		
.953			-.0313					
.955		-.0377						
.965	.0087							
1.000			.0955		.0635		.0116	

TABULATED PRESSURE DATA - OA148 (AMES 11-073-1)

AMES 11-073(OA148) -140A/B/C/R ORB LEFT WING BOT (XEBL46)

ALPHA (3) = 4.016 BETA (2) = -3.862 MACH = .59704 Q = 595.39 P = 2386.0 RN/L = 4.8469

SECTION (1)LEFT WING BOT SURF DEPENDENT VARIABLE CP

2Y/BW	.2990	.3640	.4270	.5340	.6730	.7800	.8870	.9720
X/CW								
.010	.0180	.0703	.3471	.1297	.1340	.2501	.2793	
.020	.0000	.1167	.2881	.0074	.0796	.1029	.1303	-.0878
.040		.1439	.1259					
.050	.0527			-.0080	.0184	.0394	.0454	
.069								-.0819
.080				-.0173				
.081			.0412					
.085		.1799						
.094	.0473							
.150				.0090	.0244	.0333	.0000	
.157								-.1348
.163		.1323						
.177			.0145					
.229	.0693							
.245		.0078						
.250				.0141	.0052	-.0049	-.0168	
.274			.0149					
.345								-.0895
.390		.0163						
.400				-.0041	-.0050		-.0376	
.402			.0185					
.503								-.1522
.550				-.0582	-.0675			
.565			-.2611					
.600							-.1164	
.637		-.0678						
.650						-.0959		
.670								-.1845
.700					-.1213			
.725				-.0886				
.750						-.0688	-.1228	
.760			-.0984					
.775				-.0651	-.0613			
.798		-.0606						
.808			-.0756					
.834	-.0913							
.839		-.1351						
.850				-.1425	-.1201	-.1742		
.857			-.1261					
.862								-.1958
.865	-.0756							
.879		-.1285						
.900	-.0932			-.1306			-.1450	
.905			-.1264					
.919		-.1050						

```
DATE 10 FEB 76              TABULATED PRESSURE DATA - OA148 ( AMES 11-073-1 )
                                 AMES 11-073(OA148) -140A/B/C/R ORB LEFT WING BOT              (XEBL46)

ALPHA ( 3) =    4.016   BETA  ( 2) =   -3.862
 SECTION ( 1)LEFT WING BOT SURF                DEPENDENT VARIABLE CP

2Y/BW           .2990    .3640    .4270    .5340    .6730    .7800    .8870    .9720

  X/CW
    .950                                   -.0513   -.0501   -.0646
    .953                         -.0408
    .955                -.0495
    .955       -.0043
   1.000                          .0818             .0705             .0243
ALPHA ( 3) =    4.027   BETA  ( 3) =     .191   MACH   =  .59704    Q     =  595.39   P     =  2386.0   RN/L   =  4.8469
 SECTION ( 1)LEFT WING BOT SURF                DEPENDENT VARIABLE CP

2Y/BW           .2990    .3640    .4270    .5340    .6730    .7800    .8870    .9720

  X/CW
    .010       -.0819   -.0597    .3044    .1919    .1501    .2536    .2607
    .020        .0000    .0390    .2905    .0748    .1040    .1191    .1382   -.1951
    .040                 .0849    .1601
    .050        .0053                      .0349    .0317    .0410    .0445
    .069                                                                     -.1641
    .080                                   .0120
    .081                          .0724
    .086                 .1572
    .094        .0239
    .150                                   .0102    .0196    .0323   -.0136
    .157                                                                     -.1703
    .163                 .1440
    .177                          .0292
    .229        .0572
    .246                 .0218
    .250                                   .0106    .0022   -.0050   -.0373
    .274                          .0197
    .345                                                                     -.1368
    .390                 .0211
    .400                                  -.0064   -.0105            -.0501
    .402                          .0155
    .513                                                                     -.1864
    .550                                  -.0615   -.0716
    .555                         -.2486
    .600                                                             -.1293
    .637                -.0701
    .650                                                    -.1079
    .670                                                                     -.2047
    .700                                           -.1332
    .725                                  -.0976
    .750                                                    -.0817   -.1369
    .760                         -.0983
```

AMES 11-073(OA148) -140A/B/C/R ORB LEFT WING BOT (XE8L46)

ALPHA (3) = 4.027 BETA (3) = .191

SECTION (1)LEFT WING BOT SURF DEPENDENT VARIABLE CP

2Y/BW X/CW	.2990	.3640	.4270	.5340	.6730	.7800	.8870	.9720
.775				-.0677	-.0730			
.798		-.0704						
.808			-.0836					
.834	-.0913							
.839		-.1364						
.850				-.1477	-.1294	-.1822		
.857			-.1334					
.862								-.2123
.865	-.0814							
.879		-.1355						
.900	-.0977			-.1423			-.1518	
.905			-.1334					
.919		-.1134						
.950				-.0608	-.0544	-.0694		
.953			-.0547					
.955		-.0642						
.965	-.0203							
1.000			.0745		.0746		.0292	

ALPHA (3) = 4.030 BETA (4) = 4.239 MACH = .59704 Q = 595.39 P = 2386.0 RN/L = 4.8469

SECTION (1)LEFT WING BOT SURF DEPENDENT VARIABLE CP

2Y/BW X/CW	.2990	.3640	.4270	.5340	.6730	.7800	.8870	.9720
.010	-.2151	-.2407	.2217	.2386	.2042	.2774	.2715	
.020	.0000	-.0799	.2615	.1350	.1534	.1657	.1666	-.3618
.040		-.0196	.1868					
.050	-.0519			.0800	.0647	.0748	.0732	
.069								-.2858
.080				.0420				
.081			.0943					
.086		.1202						
.094	-.0173							
.150				.0307	.0389	.0336	-.0066	
.157								-.2154
.163		.1532						
.177			.0469					
.229	.0347							
.246		.0332						
.250				.0213	.0065	-.0010	-.0418	
.274			.0260					
.345								-.1848
.390		.0281						

```
DATE 10 FEB 76            TABULATED PRESSURE DATA - OA148 ( AMES 11-073-1 )

                                 AMES 11-073(OA148) -140A/B/C/R ORB LEFT WING BOT                (XEBL46)

ALPHA ( 3) =    4.030    BETA  ( 4) =    4.239

 SECTION ( 1)LEFT WING BOT SURF              DEPENDENT VARIABLE CP

2Y/BW        .2990   .3640   .4270   5340    .6730   .7800   .8870   .9720

  X/CW
    .400                                .072  -.0135          -.0628
    .402
    .503                                                              -.2306
    .550                               -.0611  -.0719
    .565                       -.2428
    .600                                                      -.1355
    .637               -.0648
    .650                                               -.1103
    .670                                                              -.2351
    .700                                       -.1317
    .725                               -.1007
    .750                                               -.0727  -.1438
    .760                       -.1038
    .775                               -.0687  -.0745
    .798               -.0736
    .808                       -.0836
    .834      -.0940
    .839               -.1305
    .850                               -.1538  -.1285  -.1777
    .857                       -.1330
    .862                                                              -.2266
    .865      -.0810
    .879               -.1355
    .900      -.1020                   -.1443                  -.1481
    .905                       -.1308
    .919               -.1159
    .950                               -.0687  -.0484  -.0745
    .953                       -.0606
    .955               -.0677
    .965      -.0329
   1.000                        .0518           .0729           .0308
ALPHA ( 3) =    4.035    BETA  ( 5) =    8.288   MACH   =  .59704    Q     =  595.39    P     =  2386.0    RN/L   =  4.8469

 SECTION ( 1)LEFT WING BOT SURF              DEPENDENT VARIABLE CP

2Y/BW        .2990   .3640   .4270   .5340   .6730   .7800   .8870   .9720

  X/CW
    .010    -.3948  -.3755   .0804   .2660   .2188   .2573   .2281
    .020     .0000  -.1982   .1847   .1787   .1708   .1756   .1544  -.5373
    .040            -.1311   .1776
    .050    -.1333                   .1087   .1053   .0817   .0747
    .069                                                             -.4252
    .087                             .0636
```

AMES 11-073(OA148) -140A/B/C/R ORB LEFT WING BOT (XEBL46)

ALPHA (3) = 4.035 BETA (5) = 8.288

SECTION (1)LEFT WING BOT SURF DEPENDENT VARIABLE CP

2Y/BW	.2990	.3540	.4270	.5340	.6730	.7800	.8870	.9720
X/CW								
.081			.1027					
.085		.0585						
.094	-.0648							
.150				.0389	.0465	.0442	-.0233	
.157								-.2761
.163		.1408						
.177			.0562					
.229	.0077							
.246		.0399						
.250				.0225	.0077	-.0022	-.0512	
.274			.0325					
.345								-.2480
.390		.0309						
.400				-.0080	-.0113		-.0727	
.402			.0118					
.503								-.2784
.550				-.0621	-.0724			
.555			-.2856					
.600							-.1427	
.637		-.0627						
.650						-.1135		
.670								-.2700
.700					-.1302			
.725				-.1038				
.750						-.0819	-.1484	
.760			-.0985					
.775				-.0692	-.0806			
.798		-.0795						
.808			-.0788					
.834	-.0949							
.839		-.1198						
.850				-.1484	-.1307	-.1786		
.857			-.1314					
.862								-.2296
.865	-.0809							
.879		-.1353						
.900	-.0989			-.1373			-.1536	
.905			-.1279					
.919		-.1181						
.950				-.0694	-.0487	-.0756		
.953			-.0629					
.955		-.0769						
.965	-.0371							
1.000			.0462		.0625		.0290	

AMES 11-073(OA148) -140A/B/C/R ORB LEFT WING BOT (XEBL46)

ALPHA (4) = 7.996 BETA (1) = -7.892 MACH = .59670 Q = 594.93 P = 2387.1 RN/L = 4.8410

SECTION (1)LEFT WING BOT SURF DEPENDENT VARIABLE CP

2Y/BW	.2390	.3640	.4270	.5340	.6730	.7800	.8870	.9720
X/CW								
.010	-.0322	-.0802	.4009	.4949	.5190	.5774	.5486	
.020	.0000	.0971	.4441	.3655	.4315	.4662	.4706	-.3015
.040		.1530	.3337					
.050	.0387			.2498	.2971	.3298	.3399	
.069								-.1557
.080				.1971				
.081			.2169					
.086		.2594						
.094	.1112							
.150				.1656	.1933	.2104	.1735	
.157								-.1460
.163		.2636						
.177			.1538					
.229	.1399							
.246		.1330						
.250				.1355	.1430	.1431	.1084	
.274			.1310					
.345								-.0667
.390		.1092						
.400				.0883	.0950		.0573	
.402			.1084					
.503								-.1397
.550				.0106	.0101			
.555			-.3018					
.600							-.0577	
.637		-.0099						
.650						-.0424		
.670								-.1630
.700					-.0740			
.725				-.0462				
.750						-.0254	-.0807	
.760			-.0606					
.775				-.0158	-.0171			
.798		-.0254						
.808			-.0425					
.834	-.0610							
.839		-.1034						
.850				-.1105	-.0945	-.1479		
.857			-.0910					
.862								-.2419
.865	-.0444							
.870		-.0950						
.880	-.0579			-.1124			-.1611	
.905			-.1024					
.919		-.0773						

AMES 11-073(OA148) -140A/B/C/R ORB LEFT WING BOT (XEBL46)

ALPHA (4) = 7.996 BETA (1) = -7.892

SECTION (1)LEFT WING BOT SURF DEPENDENT VARIABLE CP

2Y/BW	.2990	.3640	.4270	.5340	.6730	.7800	.8870	.9720
X/CW								
.950				-.0405	-.0298	-.0693		
.953			-.0285					
.955		-.0253						
.965	.0200							
1.000			.0757		.0861		-.0769	

ALPHA (4) = 8.007 BETA (2) = -3.861 MACH = .59670 Q = 594.93 P = 2387.1 RN/L = 4.8410

SECTION (1)LEFT WING BOT SURF DEPENDENT VARIABLE CP

2Y/BW	.2990	.3640	.4270	.5340	.6730	.7800	.8870	.9720
X/CW								
.010	-.1775	-.3072	.2791	.4853	.4848	.5124	.4692	
.020	.0000	-.0422	.3789	.3789	.4244	.4395	.4282	-.5106
.040		.0353	.3301					
.050	.0329			.2738	.2984	.3154	.3184	
.069								-.3098
.080				.2128				
.081			.2300					
.085		.2139						
.094	.0629							
.150				.1681	.1965	.2026	.1549	
.157								-.2010
.163		.2626						
.177			.1588					
.220	.1195							
.246		.1432						
.250				.1362	.1310	.1313	.0818	
.274			.1299					
.305								-.1336
.390		.1163						
.400				.0833	.0821		.0329	
.402			.1017					
.503								-.1986
.550				.0100	-.0002			
.565			-.2773					
.600							-.0814	
.637		-.0031						
.650						-.0546		
.670								-.1996
.700					-.0843			
.725				-.0557				
.750						-.0377	-.1003	
.760			-.0605					

AMES 11-073(OA148) -140A/B/C/R ORB LEFT WING BOT (XE8L46)

ALPHA (4) = 8.707 BETA (2) = -3.861

SECTION (1)LEFT WING BOT SURF DEPENDENT VARIABLE CP

2Y/BW	.2990	.3640	.4270	.5340	.6730	.7800	.8870	.9720
X/CW								
.775				-.0296	-.0338			
.798		-.0298						
.808			-.0428					
.834	-.0606							
.839		-.1122						
.850				-.1217	-.1061	-.1627		
.857			-.1009					
.862								-.2780
.865	-.0430							
.873		-.1049						
.900	-.0650			-.1222			-.1710	
.905			-.1096					
.913		-.0871						
.950				-.0541	-.0373	-.0768		
.953			-.0402					
.955		-.0386						
.965	.0097							
1.000			.0697		.0783		-.0563	

ALPHA (4) = 8.012 BETA (3) = .176 MACH = .59670 Q = 594.93 P = 2387.1 RN/L = 4.8410

SECTION (1)LEFT WING BOT SURF DEPENDENT VARIABLE CP

2Y/BW	.2990	.3640	.4270	.5340	.6730	.7800	.8870	.9720
X/CW								
.010	-.3736	-.5727	.1098	.4445	.4392	.4306	.3711	
.020	.0000	-.2167	.2791	.3725	.4012	.3989	.3660	-.7319
.040		-.1097	.3113					
.050	-.0611			.2752	.2965	.2962	.2799	
.059								-.4731
.080				.2191				
.081			.2295					
.096		.1516						
.134	.0037							
.150				.1638	.1875	.1895	.1231	
.157								-.2581
.163		.2489						
.177			.1639					
.229	.0931							
.246		.1375						
.250				.1292	.1260	.1145	.0605	
[illegible]			.1267					
.345								-.2113
.393		.1146						

```
                                        AMES 11-073(OA148) -140A/B/C/R ORB LEFT WING BOT                    (XEBL46)
ALPHA ( 4) =     8.012    BETA  ( 3) =     .176
 SECTION ( 1)LEFT WING BOT SURF                     DEPENDENT VARIABLE CP
2Y/BW       .2990   .3640   .4270   .5340   .6730   .7800   .8870   .9720
  X/CW
   .400                             .0801   .0800           .0074
   .402                     .0970
   .503                                                             -.2708
   .550                             .0042  -.0110
   .565                    -.2763
   .600                                                    -.1008
   .637            -.0062
   .650                                            -.0614
   .670                                                             -.2470
   .700                                    -.0864
   .725                            -.0570
   .750                                            -.0435  -.1114
   .760                    -.0649
   .775                            -.0257  -.0387
   .793            -.0389
   .809                    -.0445
   .834   -.0571
   .833            -.1070
   .850                            -.1319  -.1113  -.1672
   .857                    -.1080
   .862                                                             -.2891
   .865   -.0488
   .879            -.1098
   .900   -.0753                   -.1262                  -.1679
   .905                    -.1218
   .919            -.0990
   .950                            -.0582  -.0500  -.0838
   .953                    -.0495
   .955            -.0487
   .965   -.0084
  1.000                     .0674           .0617          -.0273
ALPHA ( 4) =    8.012    BETA  ( 4) =    4.240   MACH   =  .59670    Q     =  534.93    P     =  2387.1    RN/L   =  4.8410
 SECTION ( 1)LEFT WING BOT SURF                     DEPENDENT VARIABLE CP
2Y/BW       .2990   .3640   .4270   .5340   .6730   .7800   .8870   .9720
  X/CW
   .010   -.5648  -.7178  -.1001   .3814   .3757   .3137   .2550
   .020    .0000  -.3646   .1445   .3461   .3523   .3499   .3016 -1.0045
   .040           -.2510   .2564
   .050   -.1577
   .069                             .2718   .2897   .2762   .2489
   .080                                                             -.6637
                                    .2108
```

REPRODUCIBILITY OF THE
ORIGINAL PAGE IS POOR

AMES 11-073(OA148) -140A/B/C/R ORB LEFT WING BOT (XEBL46)

ALPHA (4) = 8.012 BETA (4) = 4.240

SECTION (1)LEFT WING BOT SURF DEPENDENT VARIABLE CP

2Y/BW	.2990	.3640	.4270	.5340	.6730	.7800	.8870	.9720
X/CW								
.081			.2154					
.085		.0682						
.094	-.0670							
.150				.1603	.1702	.1775	.0931	
.157								-.3276
.163		.2129						
.177			.1568					
.229	.0436							
.246		.1200						
.250				.1213	.1141	.0995	.0364	
.274			.1191					
.345								-.2999
.390		.1101						
.400				.0663	.0641		-.0186	
[illegible]			.0855					
.503								-.3359
.550				-.0050	-.0202			
.555			-.2819					
.600							-.1202	
.637		-.0082						
.650						-.0763		
.670								-.2921
.700					-.0967			
.725				-.0664				
.750						-.0529	-.1348	
.760			-.0700					
.775				-.0377	-.0514			
.798		-.0456						
.808			-.0522					
.834	-.0679							
.839		-.1080						
.850				-.1323	-.1211	-.1783		
.857			-.1115					
.862								-.3115
.865	-.0483							
.879		-.1165						
.900	-.0793			-.1358			-.1773	
[illegible]			-.1231					
.919		-.1115						
.940				-.0616	-.0507	-.1003		
.943			-.0518					
.955		-.0605						
.965	-.0284							
1.000			.0442		.0542		-.0184	

```
DATE 10 FEB 76            TABULATED PRESSURE DATA - OA148 ( AMES 11-073-1 )

                                   AMES 11-073(OA148) -140A/B/C/R ORB LEFT WING BOT              (XEBL46)

ALPHA ( 4) =    8.009    BETA  ( 5) =    8.293   MACH   =  .59670     Q      =  594.93     P      =  2387.1     RN/L    =  -.B+1D

 SECTION ( 1)LEFT WING BOT SURF                DEPENDENT VARIABLE CP

2Y/BW         .2930   .3640   .4270   .5340   .6730   .7800   .8870   .9720

  X/CW
   .010    -.7647  -.6507  -.3105   .2810   .2904   .1761   .1037
   .020     .0000  -.4439  -.0146   .2937   .2975   .2764   .2007 -1.2632
   .040            -.3435   .1864
   .050    -.2633                   .2430   .2584   .2357   .1979
   .069                                                             -.8489
   .080                             .1952
   .081                     .1860
   .086            -.0127
   .094    -.1509
   .150                             .1415   .1628   .1557   .0638
   .157                                                             -.4048
   .163             .1743
   .177                     .1448
   .229     .0036
   .246             .0993
   .250                             .1033   .0999   .0909   .0121
   .274                     .1140
   .345                                                             -.3776
   .390             .0995
   .400                             .0590   .0518          -.0408
   .402                     .0754
   .503                                                             -.3939
   .550                            -.0060  -.0211
   .555                    -.3034
   .600                                                    -.1332
   .637            -.0083
   .650                                            -.0887
   .670                                                             -.3224
   .700                                    -.1093
   .725                            -.0740
   .750                                            -.0712  -.1533
   .760                    -.0764
   .775                            -.0477  -.0779
   .790            -.0503
   .803                    -.0551
   .834    -.0704
   .839            -.1048
   .850                            -.1344  -.1400  -.1856
   .857                    -.1112
   .862                                                             -.3078
   .865    -.0470
   .879            -.1174
   .900    -.0751                  -.1399                  -.1915
   .905                    -.1244
   .919            -.1125
```

```
                                          AMES 11-073(OA148) -140A/B/C/R ORB LEFT WING BOT                (XEBL46)

ALPHA ( 4) =      8.009    BETA  ( 5) =     8.293

 SECTION ( 1)LEFT WING BOT SURF                DEPENDENT VARIABLE CP

2Y/BW         .2990   .3640   .4270   .5340   .6730   .7800   .8870   .9720

  X/CW
    .950                                  -.0778  -.0647  -.1176
    .953                          -.0664
    .955                  -.0752
    .965  -.0399
   1.000                           .0432           .0289           -.0248

ALPHA ( 5) =    11.987    BETA  ( 1) =    -7.852   MACH   =  .59692      Q      =  595.28      P      =  2386.8      RN/L   =  4.8363

 SECTION ( 1)LEFT WING BOT SURF                DEPENDENT VARIABLE CP

2Y/BW         .2990   .3540   .4270   .5340   .6730   .7800   .8870   .9720

  X/CW
    .010  -.3239  -.6991   .1085   .5957   .5982   .4985   .4336
    .020   .0000  -.1721   .3787   .5774   .6010   .5927   .5296  -.8550
    .040          -.0525   .4646
    .050   .0569                   .4715   .5094   .5163   .4868
    .059                                                           -.4532
    .080                           .3950
    .091                   .3872
    .096           .2659
    .094   .1230
    .150                           .3218   .3562   .3653   .3011
    .157                                                           -.2154
    .163           .3781
    .177                   .2971
    .223   .2049
    .246           .2623
    .250                           .2593   .2711   .2552   [illegible]
    .274                   .2430
    [illegible]                                                    -.1007
    [illegible]    .2219
    .400                           .1838   .1901           [illegible]
    [illegible]            .1979
    .505                                                           -.1642
    .550                           .0924   .0794
    .565                  -.3104
    .600                                                   -.0147
    .637           .0709
    .650                                           .0170
    .670                                                            .557
    .700                                  -.0235
    .725                           .0089
    .750                                           .0187  -.0465
    .760                  -.0182
```

```
                              AMES 11-073(OA148) -140A/B/C/R ORB LEFT WING BOT                (XEBL46)
ALPHA ( 5) =    11.987    BETA  ( 1) =    -7.852
 SECTION ( 1)LEFT WING BOT SURF                    DEPENDENT VARIABLE CP
2Y/BW        .2990    .3640    .4270    .5340    .6730    .7800    .8870    .9720

  X/CW
   .775                                  .0377    .0142
   .798               .0133
   .808                        .0048
   .834     -.0168
   .839              -.0578
   .850                                 -.0905   -.0782   -.1314
   .857                       -.0606
   .862                                                                    -.2914
   .865     -.0026
   .879              -.0611
   .900     -.0258                      -.0976                     -.1715
   .905                       -.0948
   .919              -.0552
   .950                                 -.0453   -.0367   -.0942
   .953                       -.0217
   .955              -.0124
   .965      .0424
  1.000                        .0732             .0684             -.1384
ALPHA ( 5) =    12.008    BETA  ( 2) =    -3.842   MACH   =  .59692     Q      =  595.28     P      =  2386.8     RN/L   =  4.8363
 SECTION ( 1)LEFT WING BOT SURF                    DEPENDENT VARIABLE CP
2Y/BW        .2990    .3640    .4270    .5340    .6730    .7800    .8870    .9720

  X/CW
   .010     -.5538   -.9194   -.1131    .5001    .4974    .3590    .2870
   .020      .0000   -.3508    .2255    .5231    .5388    .5129    .4384  -1.0933
   .040              -.2068    .4090
   .050     -.0478                      .4502    .4877    .4737    .4320
   .059                                                                    -.6399
   .080                                 .3796
   .081                        .3624
   .095               .1808
   .134      .0493
   .150                                 .3056    .3352    .3427    .2553
   .157                                                                    -.2849
   .163               .3480
   .177                        .2878
   .223      .1633
   .246               .2477
   .250                                 .2492    .2488    .2449    .1789
   .274                        .2406
   .305                                                                    -.1926
   .330               .2113
```

```
                                    AMES 11-073(OA148) -140A/B/C/R ORB LEFT WING BOT              (XEBL46)

ALPHA ( 5) =   12.008    BETA  ( 2) =   -3.842

 SECTION ( 1)LEFT WING BOT SURF            DEPENDENT VARIABLE CP

2Y/BW        .2990   .3640   .4270   .5340   .6730   .7800   .8870   .9720

  X/CW
    .400                             .1786   .1749           .0977
    .402                     .1928
    .503                                                             -.2431
    .550                             .0836   .0689
    .565                    -.2953
    .600                                                    -.0433
    .637             .0649
    .650                                            -.0027
    .670                                                             -.2190
    .700                                    -.0419
    .725                            -.0093
    .750                                            -.0003  -.0705
    .760                    -.0205
    .775                             .0211  -.0080
    .798             .0071
    .808                     .0011
    .834    -.0214
    .839            -.0672
    .850                            -.0976  -.0948  -.1526
    .857                    -.0668
    .862                                                             -.3277
    .865    -.0019
    .879            -.0750
    .900    -.0375                  -.1071                  -.1945
    .905                    -.0887
    .919            -.0741
    .950                            -.0494  -.0529  -.1108
    .953                    -.0290
    .955            -.0312
    .965     .0194
   1.000                     .0783           .0578          -.1557

ALPHA ( 5) =   12.016    BETA  ( 3) =     .174   MACH   =  .59692     Q      =  595.28     P      =  2386.8     RN/L   =  4.8363

 SECTION ( 1)LEFT WING BOT SURF            DEPENDENT VARIABLE CP

2Y/BW        .2990   .3640   .4270   .5340   .6730   .7800   .8870   .9720

  X/CW
    .010    -.7966 -1.1409  -.3650   .3750   .3781   .2035   .1286
    .020     .0000  -.5484   .0476   .4527   .4529   .4199   .3244 -1.2864
    .040            -.3785   .3254
    .050    -.1725                   .4126   .4434   .4183   .3607
    .059                                                             -.8057
    .080                             .3571
```

AMES 11-073(OA148) -140A/B/C/R ORB LEFT WING BOT (XEBL46)

ALPHA (5) = 12.016 BETA (3) = .17

SECTION (1)LEFT WING BOT SURF DEPENDENT VARIABLE CP

2Y/BW	.2990	.3640	.4270	.5340	.6730	.7800	.8870	.9720
X/CW								
.081			.3278					
.086		.0826						
.094	-.0378							
.150				.2880	.3114	.3130	.2141	
.157								-.3445
.163		.3044						
.177			.2740					
.239	.1091							
.245		.2264						
.250				.2329	.2325	.2200	.1461	
.274			.2264					
.345								-.2700
.390		.2061						
.400				.1627	.1594		.0663	
.402			.1781					
.503								-.3080
.550				.0700	.0521			
.565			-.2883					
.600							-.0643	
.637		.0609						
.650						-.0197		
.670								-.2635
.700					-.0565			
.725				-.0228				
.750						-.0160	-.0932	
.760			-.0299					
.775				.0184	-.0300			
.798		-.0075						
.808			-.0090					
.834	-.0285							
.839		-.0737						
.850				-.1081	-.1139	-.1650		
.857			-.0834					
.862								-.3323
.865	-.0039							
.879		-.0831						
.900	-.0430			-.1187			-.2061	
.905			-.1033					
.919		-.0789						
.950				-.0631	-.0529	-.1238		
.953			-.0488					
.965		-.0492						
[illegible]	-.0039							
1.000			.0185		.0109		-.1354	

AMES 11-073(OA148) -140A/B/C/R ORB LEFT WING BOT (XEBL46)

ALPHA (5) = 11.917 BETA (4) = 4.245 MACH = .59692 Q = 595.28 P = 2386.8 RN/L = 4.8363

SECTION (1)LEFT WING BOT SURF DEPENDENT VARIABLE CP

2Y/BW	.2990	.3640	.4270	.5340	.6730	.7800	.8870	.9720
X/CW								
.010	-1.0052	-.9602	-.5710	.2388	.2386	.0058	-.0551	
.020	.0000	-.6137	-.1164	.3616	.3521	.3068	.1999	-1.4760
.040		-.4721	.2306					
.050	-.2885			.3541	.3839	.3542	.2811	
.069								-.9601
.080				.3085				
.081			.2781					
.086		-.0164						
.094	-.1313							
.150				.2470	.2781	.2803	.1689	
.157								-.3990
.163		.2434						
.177			.2423					
.223	.0555							
.246		.1844						
.250				.2032	.2076	.1925	.1140	
.274			.2029					
.345								-.3302
.390		.1797						
.400				.1386	.1397		.0404	
.402			.1533					
.503								-.3586
.550				.0583	.0330			
.565			-.2814					
.600							-.0885	
.637		.0494						
.650						-.0381		
.670								-.3110
.700					-.0731			
.725				-.0312				
.750						-.0329	-.1160	
.760			-.0421					
.775				.0054	-.0524			
.798		-.0123						
.809			-.0214					
.834	-.0372							
.839		-.0702						
.850				-.1197	-.1255	-.1776		
.857			-.0891					
.862								-.3224
.865	-.0159							
.879		-.0898						
.900	-.0571			-.1300			-.2191	
.905			-.1154					
.919		-.0893						

```
                         AMES 11-073(OA148) -140A/B/C/R ORB LEFT WING BOT               (XE8L46)
ALPHA ( 5) =    11.917    BETA  ( 4) =     4.245
 SECTION ( 1)LEFT WING BOT SURF                DEPENDENT VARIABLE CP

2Y/BW        .2990    .3640    .4270    .5340    .6730    .7800    .8870    .9720

  X/CW
    .950                                -.0865   -.0684   -.1498
    .953                       -.0649
    .955              -.0556
    .965     -.0177
   1.000                        .0336             .0177            -.1361
ALPHA ( 5) =    11.904    BETA  ( 5) =     8.309   MACH   =  .59692    Q     =  595.28    P     =  2386.8    RN/L   =  4.8363
 SECTION ( 1)LEFT WING BOT SURF                DEPENDENT VARIABLE CP

2Y/BW        .2990    .3640    .4270    .5340    .6730    .7800    .8870    .9720

  X/CW
    .010   -1.2427   -.7407   -.8069    .0599    .0699   -.2062   -.2598
    .020     .0000   -.6605   -.3223    .2500    .2363    .1795    .0608  -1.5780
    .040              -.5482    .1223
    .050    -.4311                      .3007    .3130    .2768    .1993
    .069                                                                  -1.0944
    .080                                .2658
    .081                        .2219
    .086              -.0975
    .094    -.2276
    .150                                .2136    .2420    .2367    .1253
    .157                                                                   -.4606
    .163               .1826
    .177                        .2141
    .229    -.0032
    .246               .1458
    .250                                .1792    .1817    .1619    .0715
    .274                        .1790
    .345                                                                   -.3976
    .390               .1682
    .400                                .1172    .1160             .0033
    .402                        .1344
    .503                                                                   -.4216
    .550                                .0472    .0227
    .565                       -.3318
    .600                                                           -.1135
    .637               .0423
    .650                                                  -.0533
    .670                                                                   -.3414
    .700                                         -.0840
    .725                               -.0456
    .750                                                  -.0413   -.1385
    .760                       -.0535
```

AMES 1:-073(OA148) -140A/B/C/R ORB LEFT WING BOT (XEBL46)

ALPHA (5) = 11.904 BETA (5) = 8.309

SECTION (1)LEFT WING BOT SURF DEPENDENT VARIABLE CP

2Y/BW	.2990	.3640	.4270	.5340	.6730	.7800	.8870	.9720
X/CW								
.775				-.0032	-.0565			
.798		-.0181						
.808			-.0293					
.834	-.0484							
.839		-.0657						
.850				-.1234	-.1290	-.1769		
.857			-.0924					
.862								-.3232
.865	-.0157							
.879		-.0970						
.900	-.0595			-.1438			-.2194	
.905			-.1180					
.919		-.1000						
.950				-.0974	-.0826	-.1491		
.953			-.0637					
.955		-.0680						
.955	-.0257							
1.000			.0378		-.0057		-.1154	

```
                                   AMES 11-073(OA148) -140A/B/C/R ORB LFFT WING BOT            (XEBL47)    ( 05 AUG 75  )

          REFERENCE DATA                                                                         PARAMETRIC DATA

SREF  =  2690.0000 SQ.FT.     XMRP  =  1076.6800 IN. XO                             RUDDER =    -10.000   SPDBRK =     85.000
LREF  =   474.8000 IN.        YMRP  =      .0000 IN. YO                             BDFLAP =     16.300   L-ELVN =      4.000
BREF  =   936.0680 IN.        ZMRP  =   375.0000 IN. ZO                             R-ELVN =      4.000   MACH   =      1.400
SCALE =      .0300

ALPHA ( 1) =   -4.021    BETA  ( 1) =   -3.852   MACH   =  1.3993    Q      =  600.40    P      =  438.06    RN/L   =  2.9180

 SECTION ( 1)LEFT WING BOT SURF              DEPENDENT VARIABLE CP

2Y/BW        .2990   .3640   .4270   .5340   .6730   .7800   .8870   .9720

 X/CW
   .010     -.1738  -.2495  -.1358  -.2720  -.3546  -.2183  -.1886
   .020      .0000  -.2359  -.2430  -.4091  -.3960  -.4065  -.4000  -.4537
   .040             -.2302  -.3178
   .050     -.1552                  -.4439  -.4232  -.4398  -.4315
   .069                                                             -.4856
   .080                             -.4377
   .081                     -.1913
   .086             -.1268
   .094     -.1447
   .150                             -.4001  -.3365  -.3900  -.3941
   .157                                                             -.3060
   .163             -.0331
   .177                     -.1755
   .229     -.1055
   .246             -.1136
   .250                             -.2142  -.3600  -.3538  -.3655
   .274                     -.1606
   .345                                                             -.4097
   .390             -.1386
   .400                             -.1722  -.3108          -.3279
   .402                     -.1495
   .503                                                             -.3665
   .550                             -.1351  -.1600
   .565                     -.2944
   .600                                                     -.3157
   .637             -.0928
   .650                                             -.3167
   .670                                                             -.4083
   .700                                     -.2056
   .725                             -.1854
   .750                                             -.1823  -.2764
   .760                     -.1793
   .775                             -.1344  -.1576
   .798             -.1447
   .808                     -.1229
   .834     -.1761
   .839             -.1588
   .850                             -.1972  -.2063  -.2170
```

```
DATE 10 FEB 76          TABULATED PRESSURE DATA - OA148 ( AMES 11-073-1 )                         PAGE 2321

                                   AMES 11-073(OA148) -140A/B/C/R ORB LEFT WING BOT          (XEBL47)

ALPHA ( 1) =   -4.021    BETA  ( 1) =   -3.852

 SECTION ( 1)LEFT WING BOT SURF               DEPENDENT VARIABLE CP

2Y/BW        .2990   .3640   .4270   .5340   .6730   .7800   .8870   .9720

  X/CW
   .857                     -.1745
   .862                                                             -.4080
   .865     -.1182
   .879             -.1715
   .900     -.1633                   -.2568                  -.3613
   .905                     -.2451
   .919             -.2356
   .950                              -.3050  -.2356  -.2862
   .953                     -.2817
   .955             -.2396
   .965     -.2106
  1.000                     -.1092           -.1621          -.3868

ALPHA ( 1) =   -4.015    BETA  ( 2) =     .189   MACH   =  1.3993     Q      =  600.40     P      =  438.06     RN/L   =  2.9180

 SECTION ( 1)LEFT WING BOT SURF               DEPENDENT VARIABLE CP

2Y/BW        .2990   .3640   .4270   .5340   .6730   .7800   .8870   .9720

  X/CW
   .010     -.0935  -.1129  -.0551  -.2662  -.3691  -.2530  -.2340
   .020      .0000  -.1181  -.1225  -.4025  -.4071  -.4302  -.4265  -.4942
   .040             -.1134  -.1792
   .050     -.1006                  -.4217  -.4334  -.4607  -.4552
   .069                                                             -.5089
   .080                             -.3831
   .081                     -.1515
   .086             -.0526
   .094     -.0901
   .150                             -.3172  -.3924  -.4075  -.4173
   .157                                                             -.3188
   .163              .0190
   .177                     -.1279
   .229     -.0690
   .246             -.0711
   .250                             -.1529  -.3554  -.3672  -.3891
   .274                     -.1215
   .345                                                             -.4601
   .330             -.0936
   .400                             -.1399  -.1541          -.3442
   .402                     -.1116
   .503                                                             -.3608
   .550                             -.1072  -.1340
   .575                     -.3155
   .600                                                     -.3257
```

```
                           AMES 11-073(OA148) -140A/B/C/R ORB LEFT WING BOT            (XEBL47)

ALPHA ( 1) =   -4.015    BETA  ( 2) =      .189

 SECTION ( 1)LEFT WING BOT SURF             DEPENDENT VARIABLE CP

2Y/BW        .2990   .3640   .4270   .5340   .6730   .7800   .8870   .9720

  X/CW
   .637             -.0720
   .650                                             -.1736
   .670                                                             -.4072
   .700                                     -.1719
   .725                             -.1689
   .750                                             -.1066  -.2422
   .760                     -.1692
   .775                             -.1129  -.1250
   .798             -.1341
   .808                     -.1081
   .834     -.1570
   .839             -.1402
   .850                             -.1810  -.1816  -.1878
   .857                     -.1603
   .862                                                             -.4478
   .865     -.1092
   .879             -.1612
   .900     -.1532                  -.2387                  -.2405
   .905                     -.2278
   .919             -.2210
   .950                             -.2887  -.1991  -.2716
   .953                     -.2680
   .955             -.2311
   .985     -.2254
  1.000                     -.1258          -.1828          -.2855
ALPHA ( 1) =   -4.023    BETA  ( 3) =    4.275   MACH   =  1.3993     Q      =  600.40     P      =  438.06     RN/L   =  2.9160

 SECTION ( 1)LEFT WING BOT SURF             DEPENDENT VARIABLE CP

2Y/BW        .2990   .3640   .4270   .5340   .6730   .7800   .8870   .9720

  X/CW
   .010     -.0753  -.0320   .0407  -.2607  -.3784  -.2898  -.2712
   .020      .0000  -.0447   .0070  -.3844  -.4185  -.4472  -.4529  -.5176
   .040             -.0409  -.0747
   .050     -.0725                  -.3494  -.4378  -.4719  -.4786
   .069                                                             -.5124
   .080                             -.3346
   .081                     -.0931
   .085             -.0011
   .094     -.0826
   .150                             -.1792  -.3789  -.4127  -.4317
   .157                                                             -.3270
   .163              .0538
```

REPRODUCIBILITY OF THE
ORIGINAL PAGE IS POOR

```
                         AMES 11-073(OA148) -140A/B/C/R ORB LEFT WING BOT          (XEBL47)

ALPHA ( 1) =   -4.023    BETA  ( 3) =    4.275

 SECTION ( 1)LEFT WING BOT SURF              DEPENDENT VARIABLE CP

2Y/BW       .2990  .3640  .4270  .5340  .6730  .7800  .8870  .9720

  X/CW
      .177                -.0931
      .229 -.0518
      .246        -.0414
      .250                       -.1307 -.1812 -.3620 -.3994
      .274                -.0848
      .345                                                   -.4105
      .390        -.0595
      .400                       -.1048 -.1276        -.3499
      .402                -.0818
      .503                                                   -.3447
      .550                       -.0855 -.1038
      .565                -.2996
      .600                                            -.1574
      .627        -.0595
      .650                                     -.1436
      .670                                                   -.3277
      .700                              -.1524
      .725                       -.1603
      .750                                     -.0997 -.0781
      .760                -.1602
       775                       -.0966 -.1115
      .798        -.1240
      .803                -.1023
      .834 -.1691
       839        -.1404
      .850                       -.1671 -.1625 -.1712
       857                -.1583
      .862                                                   -.2864
      .865 -.0939
      .879        -.1641
      .900 -.1646                -.2244               -.2003
      .905                -.2266
      .919        -.2213
      .950                       -.2772 -.1915 -.2554
      .953                -.2673
      .965        -.2283
      .985 -.2289
     1.000                -.1435        -.1984        -.1295
```

```
DATE 10 FEB 76            TABULATED PRESSURE DATA - OA148 ( AMES 11-073-1 )

                                  AMES 11-073(OA148) -140A/B/C/R ORB LEFT WING BOT            (XEBL=7)

ALPHA ( 2) =    -.011    BETA  ( 1) =   -3.871   MACH   =  1.3999     Q      =  600.31     P      =  437.59     RN/L    =  2.9198

 SECTION ( 1)LEFT WING BOT SURF              DEPENDENT VARIABLE CP

2Y/BW        .2930   .3640   .4270   .5340   .6730   .7800   .8870   .9720

  X/CW
   .010      .1004   .0167   .2062  -.1804  -.1734  -.1040  -.0175
   .020      .1030  -.0142   .1466  -.2135  -.2257  -.2333  -.2505  -.2136
   .040             -.0120   .0151
   .050     -.0261                  -.2218  -.2371  -.2654  -.2663
   .060                                                             -.2419
   .080                             -.1731
   .081                     -.0355
   .085              .0283
   .094     -.0402
   .150                             -.1192  -.1760  -.1946  -.2160
   .157                                                             -.1890
   .163              .1026
   .177                     -.0394
   .229     -.0347
   .246             -.0142
   .250                             -.0587  -.1363  -.1551  -.1846
   .274                     -.0420
   .345                                                             -.1531
   .390             -.0354
   .400                             -.0559  -.0435          -.1425
   .402                     -.0396
   .503                                                             -.1639
   .550                             -.0310  -.0440
   .565                     -.3339
   .600                                                     -.1114
   .637             -.0203
   .650                                             -.0831
   .670                                                             -.1612
   .700                                     -.1160
   .725                             -.1099
   .750                                             -.0257  -.0254
   .760                     -.1172
   .775                             -.0461  -.0655
   .798             -.0996
   .819                     -.0462
   .844     -.1222
   .839             -.0947
   .850                             -.1304  -.1467  -.[illegible]
   .857                     -.1075
   .862                                                             -.2080
   .875     -.0423
   .879             -.1097
   .900     -.1260                  -.1986                  -.1775
   .905                     -.1875
   .919             -.1926
```

```
                         AMES 11-073(OA148) -140A/B/C/R ORB LEFT WING BOT              (XEBL47)

ALPHA ( 2) =    -.011    BETA  ( 1) =   -3.871

 SECTION ( 1)LEFT WING BOT SURF             DEPENDENT VARIABLE CP

2Y/BW         .2990   .3640   .4270   .5340   .6730   .7800   .8870   .9720

  X/CW
   .950                               -.2562  -.2206  -.2335
   .953                       -.2311
   .955               -.2068
   .965       -.1489
  1.000                       -.1200          -.1177          -.3616
ALPHA ( 2) =    -.002    BETA  ( 2) =     .186   MACH  =  1.3999     Q      =  600.31     P      =  437.59     RN/L   =  2.9188

 SECTION ( 1)LEFT WING BOT SURF             DEPENDENT VARIABLE CP

2Y/BW         .2990   .3640   .4270   .5340   .6730   .7800   .8870   .9720

  X/CW
   .010       -.0090   .0041   .2451  -.0770  -.1934  -.1346  -.0658
   .020        .0000  -.0037   .2213  -.1840  -.2278  -.2529  -.2774  -.2451
   .040                .0045   .0723
   .050       -.0194                  -.1075  -.1810  -.2631  -.2904
   .069                                                               -.2566
   .080                               -.1066
   .081                        .0111
   .086                .0525
   .094       -.0354
   .150                               -.0777  -.1329  -.1741  -.2143
   .157                                                               -.1850
   .163                .1219
   .177                       -.0130
   .229       -.0340
   .245                .0137
   .250                               -.0359  -.0549  -.1160  -.1862
   .274                       -.0102
   .345                                                               -.1278
   .390               -.0054
   .400                               -.0323  -.0331          -.0624
   .402                       -.0203
   .503                                                               -.0875
   .550                               -.0223  -.0246
   .555                       -.3694
   .600                                                       -.0700
   .637               -.0021
   .650                                               -.0663
[illegible]                                                           -.1111
[illegible]                                   -.0998
[illegible]                           -.1029
[illegible]                                           -.0207  -.0189
   .760                       -.1072
```

```
                              AMES 11-073(OA148) -140A/B'C/R ORB LEFT WING BOT          (XEBL47)

ALPHA ( 2) =    -.002    BETA  ( 2) =      .186

 SECTION ( 1)LEFT WING BOT SUPF              DEPENDENT VARIABLE CP

2Y/BW        .2990   .3640   .4270   .5340   .6730   .7800   .8870   .9720

  X/CW
   .775                              -.0268  -.0464
   .798              -.0908
   .806                      -.0302
   .834      -.1134
   .839              -.0835
   .850                              -.1166  -.1433  -.1245
   .857                      -.0990
   .862                                                              -.2241
   .865      -.0427
   .879              -.1023
   .900      -.1131                  -.1828                  -.1722
   .905                      -.1727
   .919              -.1832
   .950                              -.2438  -.2124  -.2311
   .953                      -.2215
   .955              -.1919
   .965      -.1552
  1.000                      -.1554          -.1254          -.3006

ALPHA ( 2) =    -.007    BETA  ( 3) =    4.251   MACH   =  1.3999    Q     =  600.31    P     =  437.59    RN/L   =  2.9188

 SECTION ( 1)LEFT WING BOT SURF              DEPENDENT VARIABLE CP

2Y/BW        .2990   .3640   .4270   .5340   .6730   .7800   .8870   .9720

  X/CW
   .010      -.0729  -.0624   .2634  -.0249  -.1742  -.1588  -.0920
   .020       .0000  -.0350   .2465  -.0163  -.1168  -.2444  -.2924  -.1915
   .040              -.0190   .1153
   .050      -.0507                  -.0776  -.1831  -.2290  -.2870
   .069                                                              -.1842
   .080                              -.0596
   .081                       .0436
   .086               .0447
   .094      -.0525
   .150                              -.0405  -.0769  -.1305  -.2015
   .157                                                              -.1691
   .163               .1179
   .177                       .0075
   .229      -.0487
   .246               .0237
   .250                              -.0145  -.0396  -.0388  -.0696
   .274                       .0136
   .345                                                              -.0646
   .390               .0122
```

```
                                   AMES 11-073(OA148) -140A/B/C/R ORB LEFT WING BOT              (XEBL47)

ALPHA ( 2) =    -.007    BETA  ( 3) =     4.251

 SECTION ( 1)LEFT WING BOT SURF              DEPENDENT VARIABLE CP

2Y/BW        .2990    .3640    .4270    .5340    .6730    .7800    .8870    .9720

  X/CW
      400                              -.0105   -.0110            -.0537
     .402                     -.0019
     .503                                                                  -.0858
     .550                              -.0039   -.0086
     .585                     -.3607
     .600                                                         -.0578
     .637             .0065
     .650                                                -.0497
     .670                                                                  -.1124
     .700                                       -.0852
     .725                              -.0991
     .750                                                -.0206   -.0032
     .760                     -.1060
     .775                              -.0126   -.0351
     .798            -.0849
     .809                     -.0187
     .834   -.1075
     .839            -.0808
     .850                              -.1043   -.1367   -.1177
     .857                     -.0980
     .862                                                                  -.2239
     .865   -.0407
     .879            -.1087
     .900   -.1139                     -.1666                     -.1741
     .905                     -.1730
     .919            -.1739
     .950                              -.2320   -.1956   -.2276
     .953                     -.2211
     .955            -.1848
     .965   -.1643
    1.000                     -.1732            -.1533            -.1830
ALPHA ( 3) =     3.927    BETA  ( 1) =    -3.876   MACH    =  1.3955     Q      =  600.04    P      =  440.18    RN/L    =  2.9202

 SECTION ( 1)LEFT WING BOT SURF              DEPENDENT VARIABLE CP

2Y/BW        .2990    .3640    .4270    .5340    .6730    .7800    .8870    .9720

  X/CW
     .010    .0554    .0155    .3959    .2573    .1847    .1822    .2112
     .020    .0000    .0354    .3763    .1810    .1718    .0906    .0372    .0920
     .040             .0507    .2125
     .050    .0470                      .0500    .0244    .0268    .0334
     .059                                                                   .0572
     .080                               .0552
```

AMES 11-073(OA148) -140A/B/C/R O?B LEFT WING BOT (XEBL47)

ALPHA (3) = 3.927 BETA (1) = -3.876

SECTION (1)LEFT WING BOT SURF DEPENDENT VARIABLE CP

2Y/BW	.2990	.3640	.4270	.5340	.6730	.7800	.8870	.9720
X/CW								
.081			.1261					
.086		.1076						
.094	.0274							
.150				.0533	.0600	.0679	.0804	
.157								-.0703
.163		.1985						
.177			.0878					
.229	.0260							
.246		.0800						
.250				.0745	.0727	.0854	.0688	
.274			.0722					
.345								.0353
.390		.0720						
.400				.0695	.0805		.0624	
.402			.0659					
.503								-.0002
.550				.0729	.0555			
.565			-.4063					
.600							.0116	
.637		.0656						
.650						.0258		
.670								-.0417
.700					-.0172			
.725				-.0340				
.750						.1036	.0709	
.760			-.0541					
.775				.0296	.0398			
.798		-.0421						
.808			.0366					
.834	-.0643							
.839		-.0336						
.850				-.0631	-.0789	-.0519		
.857			-.0427					
.862								-.1464
.865	.0346							
.879		-.0446						
.900	-.0827			-.1348			-.1032	
.905			-.1249					
.919		-.1413						
.950				-.1986	-.1705	-.1848		
.953			-.1738					
.955		-.1703						
.965	-.0874							
1.000			-.1322		-.1767		-.3340	

AMES 11-073(OA148) -140A/B/C/R ORB LEFT WING BOT (XEBL47)

ALPHA (3) = 3.927 BETA (2) = .191 MACH = 1.3955 Q = 600.04 P = 440.18 RN/L = 2.9202

SECTION (1)LEFT WING BOT SURF DEPENDENT VARIABLE CP

2Y/BW	.2990	.3540	.4270	.5340	.6730	.7800	.9870	.9720
X/CW								
.010	-.0298	-.1447	.3450	.3007	.2017	.1898	.2023	
.020	.0000	-.0564	.3483	.2219	.1775	.1115	.0527	.0617
.040		-.0268	.2255					
.050	.0146			.1095	.0605	.0895	.0506	
.063								.0385
.080				.0922				
.081			.1450					
.086		.0656						
.094	.0063							
.100				.0761	.0628	.0912	.1063	
.157								-.0802
.165		.1785						
.177			.0952					
.229	.0077							
.245		.0897						
.250				.0893	.0857	.0940	.0702	
.274			.0921					
.345								.0123
.390		.0829						
.400				.0767	.0921		.0640	
.432			.0735					
.503								-.0206
.550				.0814	.0871			
.565			-.3984					
.600							.0158	
.637		.0753						
.650						.0262		
.670								-.0545
.700					-.0179			
.740				-.0326				
.750						.0737	.0711	
.767			-.0438					
.775				.0621	.0433			
.794		-.0253						
.809			.0586					
.834	-.0490							
.879		-.0188						
.900				-.0478	-.0828	-.0653		
.907			-.0346					
[illegible]								-.1727
.955	.0294							
.973		-.0407						
.990	-.0532			-.1172			-.1175	
.995			-.1076					
.999		-.1315						

```
                              AMES 11-073(OA148) -140A/B/C/R ORB LEFT WING BOT             (XEBL47)
ALPHA ( 3) =    3.927    BETA  ( 2) =     .191
 SECTION ( 1)LEFT WING BOT SURF               DEPENDENT VARIABLE CP

2Y/BW       .2990   .3640   .4270   .5340   .6730   .7800   .8870   .9720

  X/CW
    .950                            -.1890  -.1674  -.1914
    .953                    -.1699
    .955            -.1527
    .965    -.1081
   1.000                    -.1716          -.1123          -.3258
ALPHA ( 3) =    3.930    BETA  ( 3) =    4.044   MACH   =  1.3955     Q      =  600.04      P      =  440.18      RN/L   =  2.9202
 SECTION ( 1)LEFT WING BOT SURF               DEPENDENT VARIABLE CP

2Y/BW       .2990   .3640   .4270   .5340   .6730   .7800   .8870   .9720

  X/CW
    .010    -.1583  -.3729   .2647   .3386   .2360   .2176   .2395
    .020     .0000  -.1865   .2391   .2671   .2082   .1495   .1198   .0042
    .040            -.1419   .2302
    .050    -.0500                   .1552   .1040   .1112   .1099
    .059                                                             .0035
    .080                             .1363
    .081                     .1496
    .086            -.0100
    .094    -.0416
    .150                             .0922   .1092   .1175   .1226
    .157                                                            -.0959
    .163             .1427
    .177                     .1027
    .229    -.0192
    .246             .0930
    .250                             .0985   .0962   .1043   .0782
    .274                     .1071
    .345                                                            -.0012
    .390             .0906
    .400                             .0969   .1187           .0801
    .402                     .0892
    .503                                                            -.0301
    .550                             .0807   .0917
    .565                    -.3856
    .600                                                     .0262
    .637             .0821
    .650                                             .0341
    .670                                                            -.0683
    .700                                    -.0111
    .725                            -.0301
    .750                                             .0554   .0786
    .760                    -.0381
```

REPRODUCIBILITY OF THE
ORIGINAL PAGE IS POOR

AMES 11-073(OA148) -140A/B/C/R ORB LEFT WING BOT (XEBL47)

ALPHA (3) = 3.930 BETA (3) = 4.244

SECTION (1)LEFT WING BOT SURF DEPENDENT VARIABLE CP

2Y/BW	.2990	.3640	.4270	.5340	.6730	.7800	.8870	.9720
X/CW								
.775				.0828	.0565			
.798		-.0233						
.808			.0633					
.834	-.0447							
.843		-.0144						
.850				-.0292	-.0759	-.0668		
.857			-.0259					
.862								
.865	.0226							-.1980
.879		-.0450						
.900	-.0501			-.1083			-.1323	
.905			-.1113					
.919		-.1176						
.950				-.1794	-.1588	-.1779		
.953			-.1636					
.955		-.1412						
.965	-.1240							
1.000			-.2139		-.0986		-.2828	

ALPHA (4) = 7.863 BETA (1) = -3.871 MACH = 1.3954 Q = 600.24 P = 440.41 RN/L = 2.9228

SECTION (1)LEFT WING BOT SURF DEPENDENT VARIABLE CP

2Y/BW	.2990	.3640	.4270	.5340	.6730	.7800	.8870	.9720
X/CW								
.010	.0094	-.1229	.4295	.5142	.4567	.5173	.5314	
.020	.0000	.0031	.4536	.3838	.4065	.4104	.4018	.1376
.040		.0390	.3500					
.050	.0875			.2776	.2762	.3130	.3565	
.060								.1537
.080				.2397				
.081			.2601					
.086		.1520						
.094	.0792							
.150				.1973	.2551	.2821	.2913	
.157								-.0374
.163		.2877						
.177			.2007					
.229	.0868							
.245		.1707						
.250				.2065	.2253	.2464	.2208	
.274			.1955					
.345								.1333
.390		.1766						

```
                         AMES 11-073(OA148) -140A/B/C/R ORB LEFT WING BOT          (XE8L47)

.PHA ( 4) =    7.863    BETA  ( 1) =   -3.871

ECTION ( 1)LEFT WING BOT SURF                DEPENDENT VARIABLE CP

/BW        .2       .3640   .4270   .5340   .6730   .7800   .8870   .9720

X/CW
  .400                              .1949   .2490           .2019
  .402                      .1768
  .503                                                              .0920
  .550                              .1825   .1993
  .565                     -.4304
  .600                                                      .1227
  .637              .1615
  .650                                              .1310
  .670                                                              .0460
  .700                                      .0636
  .725                              .0409
  .750                                              .1651   .1671
  .760                      .0197
  .775                              .1367   .1185
  798               .0355
  .808                      .1313
  .834     .0098
  .839              .0399
  .850                              .0126  -.0115   .0072
  .857                      .0374
  .862                                                             -.0996
  .865     .1007
  .879              .0265
  .900    -.0169                   -.0683                  -.0492
  .905                     -.0537
  .919             -.0843
  .950                             -.1359  -.1165  -.1382
  .953                     -.1214
  .955             -.1216
  .965    -.0549
 1.000                     -.1551          -.2732          -.4254
PHA ( 4) =    7.994    BETA  ( 2) =    .174   MACH   =  1.3954     Q     =  600.24     P     =  440.41     RN/L   =  2.9228

ECTION ( 1)LEFT WING BOT SURF                DEPENDENT VARIABLE CP

/BW        .2990    .3640   .4270   .5340   .6730   .7800   .8870   .9720

X/CW
  .010    -.1300   -.3385   .2835   .5134   .4677   .5324   .5267
  .020     .0000   -.1222   .3555   .4183   .4182   .4354   .4156   .0252
  .040             -.0721   .3217
  .050     .0195                    .3167   .2941   .3309   .3674
  .069                                                              .0646
  .080                              .2701
```

AMES 11-073(OA148) -140A/B/C/R ORB LEFT WING BOT (XEBL47)

ALPHA (4) = 7.994 BETA (2) = .174

SECTION (1)LEFT WING BOT SURF DEPENDENT VARIABLE CP

2Y/BW	.2990	.3640	.4270	.5340	.6730	.7860	.8870	.9720
X/CW								
.081			.2424					
.086		.0724						
.094	.0367							
.150				.2057	.2614	.2841	.2909	
.157								-.0559
.163		.2362						
.177			.1964					
.229	.0565							
.246		.1633						
.250				.2067	.2292	.2503	.2186	
.274			.1990					
.345								.1008
.390		.1760						
.400				.1960	.2448		.2148	
.402			.1779					
.503								.0498
.550				.1798	.1954			
.565			-.4422					
.600							.1141	
.637		.1656						
.650						.1271		
.670								.0038
.700					.0672			
.725				.0411				
.750						.1460	.1514	
.760			.0271					
.775				.1737	.1249			
.793		.0500						
.808			.1503					
.834	.0286							
.839		.0597						
.850				.0326	-.0163	-.0056		
.857			.0441					
.862								-.1413
.865	.1056							
.873		.0269						
.900	.0088			-.0537			-.0675	
.905			-.0428					
.919		-.0650						
.950				-.1314	-.1163	-.1392		
.953			-.1101					
.960		-.0973						
.965	-.0597							
1.000			-.2012		-.2029		-.4461	

DATE 10 FEB 76 TABULATED PRESSURE DATA - OA148 (AMES 11-073-1)

AMES 11-073(OA148) -140A/B/C/R ORB LEFT WING BOT (XEBL47)

ALPHA (4) = 7.994 BETA (3) = 4.239 MACH = 1.3954 Q = 600.24 P = 440.41 RN/L = 2.9228

SECTION (1)LEFT WING BOT SURF DEPENDENT VARIABLE CP

2Y/BW	.2990	.3540	.4270	.5340	.6730	.7800	.8870	.9720
X/CW								
.010	-.2819	-.4262	.1007	.4857	.4534	.5044	.5032	
.020	.0000	-.2194	.2173	.4219	.4153	.4359	.4210	-.1002
.040		-.1349	.2539					
.050	-.0543			.3185	.3061	.3300	.3716	
.069								-.0212
.080				.2622				
.081			.1996					
.086		.0053						
.094	-.0128							
.150				.2066	.2619	.2757	.2882	
.157								-.0827
.163		.1774						
.177			.1727					
.229	.0231							
.246		.1363						
.250				.1995	.2265	.2419	.2277	
.274			.1866					
.345								.0513
.390		.1571						
.400				.1931	.2371		.2187	
.402			.1758					
.503								.0102
.550				.1745	.1891			
.565			-.4369					
.600							.1038	
.637		.1689						
.650						.1320		
.670								-.0128
.700					.0742			
.725				.0449				
.750						.1502	.1435	
.760			.0297					
.775				.1887	.1355			
.798		.0463						
.808			.1408					
.834	.0276							
.839		.0566						
.850				.0509	-.0187	-.0037		
.857			.0429					
.862								-.1657
.865	.0327							
.879		.0172						
.900	.0132			-.0496			-.0780	
.905			-.0496					
.919		-.0559						

```
DATE 10 FEB 76              TABULATED PRESSURE DATA - OA148 ( AMES 11-073-1 )                                        PAGE 2335

                                     AMES 11-073(OA149) -140A/B/C/R ORB LEFT WING BOT                 (XEBL47)

ALPHA ( 4) =    7.994    BETA  ( 3) =    4.239

 SECTION ( 1)LEFT WING BOT SURF             DEPENDENT VARIABLE CP

2Y/BW        .2990   .3640   .4270   .5340   .6730   .7800   .8870   .9720

  X/CW
   .950                             -.1252  -.0970  -.1143
   .953                     -.0989
   .955             -.0846
   .965     -.0624
  1.000                     -.1749          -.1386          -.4011

ALPHA ( 5) =    11.867   BETA  ( 1) =    -3.858   MACH   =  1.3955     Q      =  600.34     P      =  440.41     RN/L   =  2.9245

 SECTION ( 1)LEFT WING BOT SURF             DEPENDENT VARIABLE CP

2Y/BW        .2990   .3640   .4270   .5340   .6730   .7800   .8870   .9720

  X/CW
   .010     -.1100  -.2770   .3696   .6772   .6563   .7209   .7265
   .020      .0000  -.0350   .4767   .5701   .5974   .6292   .6416   .0772
   .040              .0198   .4550
   .050      .1025                   .4708   .4875   .5182   .5550
   .069                                                              .1551
   .080                              .4056
   .081                      .3774
   .086              .1823
   .094      .1253
   .150                              .3491   .4162   .4440   .4422
   .157                                                             -.0053
   .163              .3654
   .177                      .3168
   .220      .1517
   .246              .2689
   .250                              .3383   .3756   .4008   .3805
   .274                      .3154
   .345                                                              .1920
   .390              .2892
   .400                              .3209   .3805           .3526
   .402                      .3003
   .503                                                              .1502
   .550                              .2846   .3059
   .565                     -.4476
   .600                                                      .2154
   .637              .2557
   .650                                              .2284
   .670                                                              .1267
   .700                                      .1551
   .725                              .1290
   .750                                              .2683   .2567
   .760                      .1017
```

AMES 11-073(OA148) -140A/B/C/R ORB LEFT WING BOT (XEBL47)

ALPHA (5) = 11.867 BETA (1) = -3.858

SECTION (1)LEFT WING BOT SURF DEPENDENT VARIABLE CP

2Y/BW	.2990	.3640	.4270	.5340	.6730	.7800	.8870	.9720
X/CW								
.775				.2860	.2071			
.799		.1307						
.808			.2347					
.834	.1038							
.839		.1367						
.850				.1056	.0765	.0806		
.857			.1265					
.862								-.0560
.865	.1953							
.879		.1071						
.900	.0778			.0062			.0219	
.915			.0237					
.919		-.0003						
.930				-.0635	-.0454	-.0649		
.943			-.0582					
.945		-.0329						
.965	-.0010							
1.000			-.2131		-.3202		-.4887	

ALPHA (5) = 11.873 BETA (2) = .176 MACH = 1.3955 Q = 600.34 P = 440.41 RN/L = 2.9245

SECTION (1)LEFT WING BOT SURF DEPENDENT VARIABLE CP

2Y/BW	.2990	.3640	.4270	.5340	.6730	.7800	.8870	.9720
X/CW								
.010	-.2437	-.3791	.1923	.6176	.6103	.6647	.6613	
.020	.0000	-.1405	.3246	.5417	.5700	.5984	.6053	-.0719
.040		-.0777	.3744					
.050	.0239			.4505	.4725	.4972	.5307	
.069								.0450
.080				.3875				
.081			.3168					
.086		.1065						
.094	.0744							
.150				.3355	.4007	.4215	.4324	
.157								-.0492
.163		.2976						
.177			.2913					
.229	.1174							
.246		.2339						
.250				.3187	.3574	.3967	.3654	
.274			.3007					
.345								.1292
.390		.2717						

REPRODUCIBILITY OF THE
ORIGINAL PAGE IS POOR

```
                                   AMES 11-073(OA148) -140A/B/C/R ORB LEFT WING BOT              (XEBL47)
ALPHA ( 5) =   11.873    BETA  ( 2) =     .176
 SECTION ( 1)LEFT WING BOT SURF                 DEPENDENT VARIABLE CP
2Y/BW       .2990    .3640    .4270    .5340    .6730    .7800    .8870    .9720
  X/CW
   .400                                 .3140    .3631             .3283
   .402                        .2880
   .503                                                                     .0922
   .550                                 .2770    .2987
   .565                       -.4598
   .600                                                            .1862
   .637               .2587
   .650                                                   .2176
   .670                                                                     .0864
   .700                                          .1466
   .725                                 .1225
   .750                                                   .2510    .2346
   .760                        .1058
   .775                                 .2898    .2077
   .798               .1314
   .808                        .2554
   .834      .1103
   .839               .1526
   .850                                 .1338    .0653    .0639
   .857                        .1365
   .862                                                                    -.1021
   .865      .1944
   .879               .1035
   .900      .0992                      .0139                      .0007
   .905                        .0245
   .919               .0157
   .940                                -.0656   -.0300   -.0553
   .953                       -.0454
   .955              -.0279
   .965      .0085
  1.000                       -.1711            -.2739            -.5037
ALPHA ( 5) =   11.868    BETA  ( 3) =    4.257   MACH   =  1.3955    Q    =  600.34    P     =  440.41    RN/L   =  2.9245
 SECTION ( 1)LEFT WING BOT SURF                 DEPENDENT VARIABLE CP
2Y/BW       .2990    .3640    .4270    .5340    .6730    .7800    .8870    .9720
  X/CW
   0.0      -.3434   -.4239    .0043    .5299    .5436    .5711    .5789
   .020      .0000   -.2325    .1778    .4942    .5228    .5479    .5545   -.1950
   .040              -.1637    .2898
   .050     -.0446                      .4175    .4420    .4601    .4964
   .059                                                                    -.0503
   .080                                 .3622
```

AMES 11-073(OA148) -140A/B/C/R ORB LEFT WING BOT (XEBL47)

ALPHA (5) = 11.868 BETA (3) = 4.257

SECTION (1)LEFT WING BOT SURF DEPENDENT VARIABLE CP

2Y/BW	.2990	.3640	.4270	.5340	.6730	.7800	.8870	.9720
X/CW								
.081			.2558					
.086		.0268						
.094	.0176							
.150				.3151	.3717	.3998	.4186	
157								-.0810
.163		.2298						
.177			.2499					
.229	.0738							
.246		.1939						
.250				.2980	.3345	.3709	.3548	
.274			.2789					
.345								.0889
.390		.2390						
.400				.3006	.3478		.3186	
.402			.2725					
.503								.0619
.550				.2683	.2872			
.565			-.4450					
.600							.1727	
.637		.2529						
.650						.2065		
.670								.0628
.700					.1471			
.725				.1217				
.750						.2313	.2176	
.760			.1032					
.775				.2822	.2074			
.798		.1206						
.809			.2281					
.834	.0970							
.839		.1352						
.850				.1333	.0451	.0584		
.857			.1295					
.862								-.1235
.865	.1671							
.879		.0991						
.900	.1050			.0215			-.0179	
.905			.0211					
.919		.0241						
.950				-.0591	-.0283	-.0381		
.953			-.0252					
.95		-.0149						
.965	.0036							
1.000			-.2235		-.1466		-.4765	

```
DATE 10 FEB 76              TABULATED PRESSURE DATA - OA148 ( AMES 11-073-1 )                                  PAGE 2339

                                  AMES 11-073(OA148) -140A/B/C/P ORB LEFT WING BOT                  (XEBL47)

ALPHA ( 6) =   15.839    BETA  ( 1) =   -3.834   MACH  =  1.3943    Q    =  600.32    P    =  441.12    RN/L  =  2.9229

 SECTION ( 1)LEFT WING BOT SURF              DEPENDENT VARIABLE CP

2Y/BW       .2990   .3640   .4270   .5340   .6730   .7800   .8870   .9720

 X/CW
   .010    -.2018  -.3161   .2951   .7607   .7723   .8033   .7940
   .020     .0000  -.0454   .4585   .6961   .7391   .7659   .7733  -.017
   .040             .0259   .5164
   .050     .1239                   .6050   .6427   .6800   .7087
   .063                                                             .1357
   .080                             .5449
   .081                     .4627
   .085             .2275
   .094     .1748
   .150                             .4920   .5530   .6023   .5775
   .157                                                            -.0065
   .163             .4445
   .177                     .4311
   .229     .2218
   .246             .3579
   .250                             .4595   .5175   .5583   .5068
   .274                     .4358
   .345                                                             .2450
   .390             .4096
   .400                             .4509   .5114           .4626
   .402                     .4129
   .523                                                             .2050
   [illegible]                      .4060   .4167
   [illegible]             -.4592
   [illegible]                                              .2942
   .647             .3741
   .650                                     .2171
   .670                                                             .1949
   .700                                     .2466
   [illegible]                      .2140
   [illegible]                                      3664    .7320
   .760                     .1852
   .775                             .4125   .2861
   .798             .2356
   .809                     .3432
   .834     .2195
   .839             .2309
   .850                             .2059   .1515   .1477
   [illegible]              .2171
   .862                                                            -.0250
   .865     .2915
   .879             .1735
   .900     1678                    .0713                   .0820
   925                      .0839
   .919             .0742
```

```
DATE 10 FEB 76              TABULATED PRESSURE DATA - OA148 ( AMES 11-073-1 )                                          PAGE 2340

                                       AMES 11-073(OA148) -140A/B/C/R ORB LEFT WING BOT              (XE9L47)

ALPHA ( 6) =   15.839    BETA  ( 1) =   -3.834

 SECTION ( 1)LEFT WING BOT SURF           DEPENDENT VARIABLE CP

2Y/BW        .2993   .3640   .4270   .5340   .6730   .7800   .8870   .9720

  X/CW
   .950                               .0067   .0439   .0208
   .953                      -.0016
   .955               .0183
   .965      .0607
  1.000                      -.2039           -.3796          -.5490

ALPHA ( 6) =   15.851    BETA  ( 2) =     .174   MACH   =  1.3343     Q      =  600.32     P      =  441.12     [illegible]   =  2.9229

 SECTION ( 1)LEFT WING BOT SURF           DEPENDENT VARIABLE CP

2Y/BW        .2993   .3640   .4270   .5340   .6730   .7800   .8870   .9720

  X/CW
   .010    -.3059  -.3348   .1001   .6563   .6873   .6907   .6797
   .020     .0000  -.1523   .2959   .6317   .6767   .6991   .6935  -.1485
   .040            -.0824   .4 59
   .050     .0476                   .5655   .6131   .6277   .6528
   .069                                                             .0223
   .080                             .5132
   .081                     .3874
   .086             .1363
   .094     .1082
   .150                             .4654   .5315   .5726   .5397
   .157                                                            -.0513
   .163             .3577
   .177                     .3914
   .229     .1760
   .246             .3324
   .250                             .4393   .4894   .5312   .4742
   .274                     .4136
   .345                                                             .1313
   .390             .3793
   .400                             .4324   .4908           .4319
   .402                     .4025
   .503                                                             .1551
   .550                             .4097   .4018
   .565                    -.4956
   .600                                                     .2746
   .637             .3554
   .660                                             .3004
   .670                                                             .1574
   .700                                     .2483
   .725                             .2131
   .750                                             .3493   .3096
   .760                     .2041
```

AMES 11-073(OA148) -140A/B/C/R ORB LEFT WING BOT (XEBL47)

ALPHA (6) = 15.851 BETA (2) = .174

SECTION (1)LEFT WING BOT SURF DEPENDENT VARIABLE CP

2Y/BW	.2990	.3640	.4270	.5340	.6730	.7800	.8870	.9720
X/CW								
.775				.4192	.3009			
.799		.2304						
.808			.3437					
.834	.2079							
.839		.2291						
.850				.2162	.1398	.1282		
.857			.2126					
862								-.0592
.865	.2818							
.879		.1744						
.900	.1885			.0728			.0603	
.905			.0843					
.919		.0915						
.950				-.0067	.0312	.0239		
.953			.0234					
.955		.0351						
.965	.0685							
1.000			-.3054		-.3210		-.5559	

ALPHA (6) = 15.843 BETA (3) = 4.283 MACH = 1.3943 Q = 600.32 P = 441.12 RN/L = 2.9229

SECTION (1)LEFT WING BOT SURF DEPENDENT VARIABLE CP

2Y/BW	.2990	.3640	.4270	.5340	.6730	.7800	.8870	.9720
X/CW								
.010	-.3767	-.4691	-.0819	.5297	.5719	.5641	.5501	
.020	.0000	-.2419	.1430	.5460	.5974	.6197	.6086	-.2435
.040		-.1727	.3187					
.050	-.0252			.5023	.5588	.5718	.5941	
.069								-.0567
.083				.4625				
.091			.3173					
.095		.0626						
.094	.0508							
.150				.4233	.4933	.5359	.5082	
.157								-.0853
.163		.2965						
.177			.3395					
.229	.1267							
.246		.2674						
.250				.4054	.4642	.5023	.4566	
.274			.3829					
[illegible]								.1355
.300		.3456						

```
                                AMES 11-073(OA148) -140A/B/C/R ORB LEFT WING BOT          (XEBL47)

ALPHA ( 6) =    15.843    BETA  ( 3) =    [illegible].283

 SECTION ( 1)LEFT WING BOT SURF               DEPENDENT VARIABLE CP

2Y/BW       .2990   .3640   .4270   .5340   .6730   .7800   .8870   .9720

  X/CW
    .400                            .4128   .4668           .4107
    .402                    .3829
    .503                                                            .1053
    .550                            .3824   .3914
    .565                   -.4640
    .600                                                    .2511
    .637            .3529
    .650                                            .2[illegible]3
    .670                                                            .1267
    .700                                    .2440
    .725                            .2179
    .750                                            .3348   .2913
    .760                    .2008
    .775                            .4070   .3015
    .798            .2183
    .808                    .3352
    .834    .1899
    .839            .2290
    .850                            .2042   .1231   .1458
    .857                    .2056
    .862                                                           -.0802
    .865    .2660
    .879            .1806
    .900    .2010                   .0748                   .0370
    .905                    .0945
    .919            .1008
    .940                           -.0106   .0138   .0280
    .953                    .0398
    .955            .0482
    .965    .0716
   1.000                   -.2796          -.3264          -.5169
```

```
DATE 10 FEB 76            TABULATED PRESSURE DATA - OA148 ( AMES 11-073-1 )                                          PAGE 2343

                                      AMES 11-073(OA148) -140A/B/C/R ORB LEFT WING BOT              (XEBL48)   ( 05 AUG 75  )

              REFERENCE DATA                                                                         PARAMETRIC DATA

SREF  =  2690.0000 SQ.FT.   XMRP  =  1076.6800 IN. XO                                     RUDDER =   -10.000  SPDBRK =    85.000
LREF  =   474.8000 IN.      YMRP  =      .0000 IN. YO                                     BDFLAP =    16.300  L-ELVN =     4.000
BREF  =   936.0680 IN.      ZMRP  =   375.0000 IN. ZO                                     R-ELVN =     4.000  MACH   =     1.250
SCALE =      .0300

ALPHA ( 1) =   -4.024    BETA  ( 1) =   -3.849   MACH   =  1.2475     Q      =  600.37     P      =  551.11     RN/L   =  3.0241

 SECTION ( 1)LEFT WING BOT SURF              DEPENDENT VARIABLE CP

2Y/BW        .2990   .3640   .4270   .5340   .6730   .7800   .8870   .9720

  X/CW
   .010     -.1493  -.2835  -.2066  -.4045  -.5064  -.3549  -.3263
   .020      .0000  -.2732  -.3119  -.5522  -.5464  -.5633  -.5585  -.6062
   .040             -.2649  -.3575
   .050     -.1479                  -.5763  -.5724  -.5980  -.5883
   .069                                                             -.6555
   .080                             -.5378
   .081                     -.2406
   .086             -.1485
   .094     -.1474
   .150                             -.4960  -.5123  -.5287  -.5402
   .157                                                             -.3938
   .163             -.0592
   .177                     -.2189
   .229     -.1309
   .246             -.1397
   .250                             -.2400  -.4631  -.4767  -.4986
   .274                     -.1976
   .345                                                             -.5890
   .390             -.1631
   .400                             -.1986  -.2884          -.4442
   .402                     -.1674
   .503                                                             -.5825
   .550                             -.1434  -.1772
   .565                     -.3908
   .600                                                     -.4194
   .637             -.1074
   .650                                             -.2246
   .670                                                             -.5538
   .700                                     -.2205
   .725                             -.2174
   .750                                             -.1177  -.3749
   .760                     -.2115
   .775                             -.1456  -.1649
   .788             -.1599
   .803                     -.1447
   .834     -.1989
   .839             -.1881
   .950                             -.2356  -.1905  -.2265
```

AMES 11-073(OA148) -140A/B/C/R ORB LEFT WING BOT (XE8L48)

ALPHA (1) = -4.024 BETA (1) = -3.849

SECTION (1)LEFT WING BOT SURF DEPENDENT VARIABLE CP

2Y/BW	.2990	.3640	.4270	.5340	.6730	.7800	.8870	.9720
X/CW								
.857			-.2082					
.862								-.5115
.865	-.1396							
.879		-.2044						
.900	-.1923			-.2962			-.3692	
.905			-.2881					
.919		-.2797						
.950				-.3267	-.2624	-.3197		
.953			-.3398					
.955		-.2870						
.955	-.2606							
1.000			-.0916		-.1891		-.1434	

ALPHA (1) = -4.006 BETA (2) = .189 MACH = 1.2475 Q = 600.37 P = 551.11 RN/L = 3.0241

SECTION (1)LEFT WING BOT SURF DEPENDENT VARIABLE CP

2Y/BW	.2990	.3640	.4270	.5340	.6730	.7800	.8870	.9720
X/CW								
.010	-.0992	-.1367	-.0925	-.4042	-.5317	-.3975	-.3805	
.020	.0000	-.1440	-.1511	-.5508	-.5694	-.5934	-.5948	-.6628
.040		-.1376	-.2051					
.050	-.1136			-.5274	-.5898	-.6230	-.6251	
.069								-.6886
.080				-.4992				
.081			-.1911					
.086		-.0700						
.094	-.1121							
.150				-.2956	-.5108	-.5449	-.5705	
.157								-.4152
.163		-.0014						
.177			-.1708					
.229	-.0892							
.246		-.1000						
.250				-.1898	-.4052	-.4952	-.5281	
.274			-.1407					
.345								-.6372
.390		-.1040						
.400				-.1449	-.1718		-.4670	
.402			-.1180					
.503								-.6084
.550				-.1145	-.1410			
.565			-.4214					
.600							-.3468	

AMES 11-073(OA148) -140A/B/C/R ORB LEFT WING BOT (XEBL48)

ALPHA (1) = -4.006 BETA (2) = .189

SECTION (1)LEFT WING BOT SURF DEPENDENT VARIABLE CP

2Y/BW	.2990	.3640	.4270	.5340	.6730	.7800	.8870	.9720
X/CW								
.637		-.0894						
.650						-.1737		
.670								-.580
.700					-.2028			
.725				-.2087				
.750						-.1150	-.1211	
.760			-.2095					
.775				-.1379	-.1578			
.798		-.1598						
.808			-.1388					
.834	-.1916							
.839		-.1773						
.850				-.2258	-.1993	-.2061		
.857			-.2051					
.862								-.4653
.885	-.1355							
.879		-.2052						
.900	-.1987			-.3013			-.2632	
.905			-.2859					
.919		-.2790						
.950				-.3444	-.2528	-.3135		
.953			-.3382					
.955		-.2913						
.965	-.2824							
1.000			-.1445		-.2296		-.1422	

ALPHA (1) = -4.015 BETA (3) = 4.273 MACH = 1.2475 Q = 600.37 P = 551.11 RN/L = 3.0241

SECTION (1)LEFT WING BOT SURF DEPENDENT VARIABLE CP

2Y/BW	.2990	.3640	.4270	.5340	.6730	.7800	.8870	.9720
X/CW								
.010	-.0938	-.0470	.0131	-.3958	-.5430	-.4302	-.4177	
.020	.0000	-.0617	0043	-.5308	-.5784	-.6119	-.6167	-.6889
.040		-.0534	-.0954					
.050	-.1037			-.4508	-.5914	-.6355	-.6439	
.069								-.6849
.080				-.3861				
.081			-.1152					
.086		-.0119						
.094	-.0941							
.150				-.2092	-.4731	-.5453	-.5736	
.157								-.4089
.163		.0587						

```
DATE 10 FEB 76            TABULATED PRESSURE DATA - OA148 ( AMES 11-073-1 )

                              AMES 11-073(OA148) -140A/B/C/R ORB LEFT WING BOT            (XEBL48)

ALPHA ( 1) =    -4.015    BETA  ( 3) =    4.273

 SECTION ( 1)LEFT WING BOT SURF              DEPENDENT VARIABLE CP

2Y/BW          .2990     .3640     .4270     .5340     .6730     .7800     .8870     .9720

  X/CW
      .177                        -.1126
      .229    -.0663
      .246              -.0487
      .250                                  -.1425    -.1877    -.4248    -.5335
      .274                        -.0930
      .345                                                                          -.6273
      .390              -.0622
      .400                                  -.1125    -.1331              -.3749
      .402                        -.0874
      .503                                                                          -.5494
      .550                                  -.0964    -.1130
      .565                        -.3506
      .600                                                                -.1528
      .637              -.0782
      .650                                                      -.1583
      .670                                                                          -.1908
      .700                                            -.1882
      .725                                  -.2049
      .750                                                      -.1091    -.0914
      .760                        -.2024
      .775                                  -.1299    -.1482
      .798              -.1541
      .808                        -.1363
      .834    - 1973
      .840              -.1786
      .850                                  -.2172    -.2140    -.2117
      .857                        -.2038
      .862                                                                          -.2603
      .865    -.1239
      .879              -.2119
      .900    -.2044                        -.2970                        -.2502
      .905                        -.2906
      .919              -.2748
      .950                                  -.3547    -.2553    -.3170
      .953                        -.3355
      .955              -.2853
      .965    -.2828
     1.000                        -.1793              -.2579              -.1904
```

AMES 11-073(OA148) -140A/B/C/R ORB LEFT 'NG LOT (XEBL48)

ALPHA (2) = .012 BETA (1) = -3.869 MACH = 1.2460 Q = 599.92 P = 552.04 RN/L = 3.0247

SECTION (1)LEFT WING BOT SURF DEPENDENT VARIABLE CP

2Y/BW	.2990	.3640	.4270	.5340	.6730	.7800	.8870	.9720
X/CW								
.010	.0021	.0090	.1968	-.1863	-.2964	-.2238	-.1371	
.020	.0000	-.0247	.1696	-.3358	-.3552	-.3700	-.3940	-.3326
.040		-.0226	-.0162					
.050	-.0372			-.2526	-.3413	-.3877	-.4032	
.069								-.3610
.080				-.2204				
.081			-.0547					
.086		.0187						
.094	-.0595							
.150				-.1447	-.2360	-.2801	-.3255	
.157								-.2417
.163		.0811						
.177			-.0665					
.229	-.0602							
.246		-.0332						
.250				-.0904	-.0987	-.2008	-.2734	
.274			-.0628					
.345								-.2096
.390		-.0448						
.400				-.0703	-.0694		-.1364	
.402			-.0578					
.503								-.1497
.550				-.0396	-.0505			
.565			-.4421					
.600							-.1099	
.637		-.0224						
.650						-.0964		
.670								-.1717
.700					-.1321			
.725				-.1395				
.750						-.0271	-.0472	
.760			-.1426					
.775				-.0472	-.0848			
.798		-.1119						
.808			-.0580					
.834	-.1446							
.839		-.1155						
.850				-.1596	-.1636	-.1568		
.857			-.1348					
.862								-.2705
.865	-.0510							
.879		-.1420						
.900	-.1358			-.2365			-.2289	
.905			-.2231					
.919		-.2326						

```
DATE 10 FEB 76             TABULATED PRESSURE DATA - OA148 ( AMES 11-073-1 )                                  PAGE 2348
                                  AMES 11-073(OA148) -140A/B/C/R ORB LEFT WING BOT                (XE8L48)

ALPHA ( 2) =     .012    BETA  ( 1) =   -3.869

 SECTION ( 1)LEFT WING BOT SURF          DEPENDENT VARIABLE CP

2Y/BW        .2990   .3640   .4270   .5340   .6730   .7800   .8870   .9720

  X/CW
    .950                             -.2933  -.2317  -.2952
    .953                     -.2836
    .955             -.2364
    .965     -.1925
   1.000                     -.0819          -.0987          -.2053
ALPHA ( 2) =     .020    BETA  ( 2) =     .189   MACH   =  1.2460     Q      =  599.92     P      =  552.04     RN/L   =  3.0247

 SECTION ( 1)LEFT WING BOT SURF          DEPENDENT VARIABLE CP

2Y/BW        .2990   .3640   .4270   .5340   .6730   .7800   .8870   .9720

  X/CW
    .010     -.0387   .0008   .2540  -.1707  -.3136  -.2591  -.1833
    .020      .0000  -.0117   .2190  -.2005  -.2991  -.3845  -.4272  -.3387
    .040              .0015   .0514
    .050     -.0510                  -.1773  -.2301  -.3708  -.4272
    .069                                                             -.3280
    .090                             -.1534
    .081                     -.0047
    .086              .0483
    .094     -.0676
    .150                             -.1057  -.1625  -.2438  -.3283
    .157                                                             -.2263
    .163              .1140
    .177                     -.0378
    .229     -.0494
    .246             -.0051
    .250                             -.0510  -.0854  -.0866  -.1329
    .274                     -.0264
    .345                                                             -.1050
    .390             -.0022
    .400                             -.0285  -.0335          -.0853
    .402                     -.0191
    .503                                                             -.1396
    .550                             -.0180  -.0298
    .565                     -.4662
    .600                                                     -.0827
    .637             -.0032
    .650                                             -.0772
    .670                                                             -.1475
    .700                                     -.1216
    .725                             -.1354
    .750                                             -.0256  -.0354
    .760                     -.1430
```

```
DATE 10 FEB 76              TABULATED PRESSURE DATA - OA148 ( AMES 11-073-1 )

                                   AMES 11-073(OA148) -140A/B/C/R ORB LEFT WING BOT              (XEBL48)
ALPHA ( 2) =     .020   BETA  ( 2) =     .189

 SECTION ( 1)LEFT WING BOT SURF              DEPENDENT VARIABLE CP

2Y/BW       .2990   .3640   .4270   .5340   .6730   .7800   .8870   .9720

  X/CW
   .775                             -.0362  -.0790
   .798            -.1116
   .808                    -.0439
   .834    -.1406
   .839            -.1086
   .850                             -.1538  -.1693  -.1585
   .857                    -.1319
   .862
   .865    -.0612                                                   -.2694
   .879            -.1381
   .900    -.1395                   -.2355                  -.2268
   .905                    -.2199
   .919            -.2305
   .950                             -.2992  -.2299  -.2977
   .953                    -.2870
   .955            -.2364
   .965    -.2057
  1.000                    -.1565           -.1625          -.1679
ALPHA ( 2) =     .014   BETA  ( 3) =   4.249  MACH   =  1.2460     Q     =  599.92     P     =  552.04     RN/L   =  3.0247
 SECTION ( 1)LEFT WING BOT SURF              DEPENDENT VARIABLE CP

2Y/BW       .2990   .3640   .4270   .5340   .6730   .7800   .8870   .9720

  X/CW
   .010    -.1246  -.0643   .2851  -.0547  -.2623  -.2703  -.2016
   .020     .0000  -.0312   .2593  -.0611  -.1860  -.3514  -.4246  -.1904
   .040            -.0160   .1160
   .050    -.0851                  -.1102  -.2279  -.2733  -.3526
   .069                                                             -.1890
   .080                            -.0809
   .081                     .0501
   .086             .0444
   .094    -.0917
   .150                            -.0642  -.0919  -.0989  -.1251
   .157                                                             -.1518
   .163             .1295
   .177                    -.0010
   .229    -.0578
   .246             .0314
   .250                            -.0198  -.0460  -.0606  -.0899
   .274                     .0108
   .345                                                             -.0960
   .390             .0203
```

```
                    AMES 11-073(OA148) -140A/B/C/R ORB LEFT WING BOT            (XEBL48)

ALPHA ( 2) =      .014    BETA  ( 3) =     4.249

 SECTION ( 1)LEFT WING BOT SURF             DEPENDENT VARIABLE CP

2Y/BW          .2990     .3640     .4270     .5340     .6730     .7800     .8870     .9720

  X/CW
   .400                                -.0018     .0104              -.0563
   .402                       .0070
   .503                                                                        -.1196
   .550                                -.0069    -.0109
   .565                      -.4219
   .600                                                              -.0799
   .627             .0004
   .650                                                    -.0703
   .670                                                                        -.1445
   .700                                          -.1153
   .725                                -.1326
   .750                                                    -.0315    -.0442
   .760                      -.1388
   .775                                -.0285    -.0725
   .798            -.1122
   .808                      -.0407
   .834   -.1366
   .839            -.1056
   .850                                -.1423    -.1711    -.1735
   .857                      -.1275
   .862                                                                        -.2985
   .865   -.0656
   .879            -.1429
   .900   -.1399                       -.2334                        -.2348
   .905                      -.2237
   .919            -.2211
   .950                                -.3007    -.2241    -.2981
   .953                      -.2772
   .955            -.2298
   .965   -.2085
  1.000                      -.1979              -.2223              -.1646
ALPHA ( 3) =     3.961    BETA  ( 1) =    -3.873   MACH   =  1.2462     Q     =  600.16     P     =  552.05    RN/L   =  3.0262

 SECTION ( 1)LEFT WING BOT SURF             DEPENDENT VARIABLE CP

2Y/BW          .2990     .3640     .4270     .5340     .6730     .7800     .8870     .9720

  X/CW
   .010    .0357    -.0440     .4265     .2331     .1289     .1357     .1629
   .020    .0000    -.0024     .3859     .1279     .1099     .0563     .0026     .0747
   .040              .0214     .2145
   .050    .0395                         .0472    -.0012     .0360     .0109
   .069                                                                         .0320
   .080                                  .0476
```

AMES 11-073(OA148) -140A/B/C/R ORB LEFT WING BOT (XEBL48)

ALPHA (3) = 3.961 BETA (1) = -3.873

SECTION (1)LEFT WING BOT SURF DEPENDENT VARIABLE CP

2Y/BW	.2990	.3640	.4270	.5340	.6730	.7800	.8870	.9720
X/CW								
.081			.1321					
.086		.0978						
.094	.0128							
.150				.0337	.0549	.0728	.0835	
.157								-.0923
.163		.2045						
.177			.0794					
.229	-.0047							
.246		.0759						
.250				.0707	.0662	.0757	.0457	
.274			.0749					
.345								.0130
.390		.0707						
.400				.0749	.0951		.0495	
.402			.0643					
.503								-.0279
.550				.0731	.0785			
.565			-.4879					
.600							-.0037	
.637		.0683						
.650						.0090		
.670								-.0651
.700					-.0491			
.725				-.0593				
.750						.0539	.0530	
.760			-.0714					
.775				.0745	.0159			
.788		-.0421						
.808			.0542					
.834	-.0646							
.839		-.0288						
.850				-.0839	-.1044	-.0921		
.857			-.0518					
.862								-.2059
.865	.0421							
.879		-.0658						
.900	-.0729			-.1716			-.1665	
.905			-.1486					
.919		-.1708						
.950				-.2416	-.2164	-.2651		
.953			-.2322					
.955		-.1902						
.965	-.1275							
1.000			-.0776		-.0999		-.3520	

AMES 11-073(OA148) -140A/B/C/R ORB LEFT WING BOT (XEBL48)

ALPHA (3) = 3.960 BETA (2) = .185 MACH = 1.2462 Q = 600.16 P = 552.05 RN/L = 3.0262

SECTION (1)LEFT WING BOT SURF DEPENDENT VARIABLE CP

2Y/BW	.2990	.3640	.4270	.5340	.6730	.7800	.8870	.9720
X/CW								
.010	-.0892	-.2247	.3634	.2841	.1589	.1584	.1853	
.020	.0000	-.1053	.3613	.1785	.1428	.0903	.0470	.0242
.040		-.0718	.2518					
.050	-.0193			.1060	.0407	.0724	.0582	
.069								.0032
.080				.0910				
.081			.1489					
.085		.0506						
.094	-.0235							
.150				.0599	.0920	.0920	.0814	
.157								-.1048
.163		.2019						
.177			.0906					
.229	-.0240							
.246		.0856						
.250				.0898	.0821	.0821	.0462	
.274			.0981					
.345								-.0003
.390		.0943						
.400				.0962	.1111		.0726	
.402			.0908					
.503								-.0466
.550				.0873	.0943			
.565			-.5257					
.600							-.0084	
.637		.0894						
.650						.0100		
.670								-.0870
.700					-.0451			
.725				-.0537				
.750						.0459	.0466	
.760			-.0697					
.775				.0884	.0305			
.798		-.0397						
.808			.0618					
.834	-.0641							
.839		-.0276						
.850				-.0652	-.1058	-.1111		
.857			-.0499					
.862								-.2355
.865	.0166							
.879		-.0710						
.900	-.0698			.1697			-.1759	
.905			-.1549					
.919		-.1653						

REPRODUCIBILITY OF THE
ORIGINAL PAGE IS POOR

```
DATE 10 FEB 76            TABULATED PRESSURE DATA - OA148 ( AMES 11-073-1 )

                                   AMLS 11-073(OA148) -140A/B/C/R ORB LEFT WING BOT              (XEBL48)

ALPHA ( 3) =     3.960    BETA  ( 2) =      .185

 SECTION ( 1)LEFT WING BOT SURF              DEPENDENT VARIABLE CP

2Y/BW        .2990    .3640    .4270    .5340    .6730    .7800    .8870    .9720

  X/CW
   .950                                 -.2430   -.2176   -.2562
   .953                       -.2300
   .955              -.1882
   .965     -.1470
  1.000                       -.1412             -.0819             -.3098

ALPHA ( 3) =     3.964    BETA  ( 3) =    4.240   MACH   =  1.2462     Q     =  600.16     P     =  552.05     RN/L   =  3.0262

 SECTION ( 1)LEFT WING BOT SURF              DEPENDENT VARIABLE CP

2Y/BW        .2990    .3640    .4270    .5340    .6730    .7800    .8870    .9720

  X/CW
   .010     -.2472   -.3706    .2728    .3430    .2077    .2295    .2464
   .020      .0000   -.2190    .3203    .2388    .1766    .1684    .1244   -.0418
   .040              -.1664    .2610
   .050     -.0933                      .1728    .0906    .1139    .1263
   .069                                                                   -.0297
   .080                                 .1344
   .081                        .1746
   .086               .0075
   .094     -.0741
   .150                                 .1011    .1207    .1144    .1092
   .157                                                                   -.1164
   .163               .1711
   .177                        .1133
   .220     -.0593
   .246               .1005
   .250                                 .1104    .1019    .1068    .0759
   .274                        .1192
   .345                                                                   -.0346
   .390               .1083
   .470                                 .1180    .1418             .0938
   .472                        .1100
   .503                                                                   -.0836
   .550                                 .0990    .1000
   .565                       -.4715
   .600                                                   -.0132
   .637               .0948
   .650                                                    .0131
   .670                                                                   -.1133
   .700                                          -.0446
   .725                                -.0541
   .750                                                    .0244    .0409
   .760                       -.0659
```

```
DATE 10 FEB 76            TABULATED PRESSURE DATA - OA148 ( AMES 11-073-1 )                                          PAGE 2354

                                    AMES 11-073(OA148) -140A/B/C/R ORB LEFT WING BOT              (XEBL48)

ALPHA ( 3) =     3.964    BETA  ( 3) =     4.240

 SECTION ( 1)LEFT WING BOT SURF              DEPENDENT VARIABLE CP

2Y/BW         .2990   .3640   .4270   .5340   .6730   .7800   .8870   .9720

  X/CW
    .775                                  .0959   .0286
    .793                -.0421
    .808                        .0566
    .834       -.0630
    .843                -.0274
    .850                                 -.0536  -.1173  -.1303
    .857                        -.0525
     862                                                                 -.2739
    .865        .0085
    .873                -.0717
    .900       -.0630                    -.1689                  -.1925
    .905                        -.1561
    .919                -.1489
    .949                                 -.2450  -.2003  -.2477
    .953                        -.2137
    .955                -.1763
    .965       -.1610
   1.000                        -.1998           -.1249          -.2743
ALPHA ( 4) =     7.898    BETA  ( 1) =    -3.868    MACH   =  1.2462      Q      =  600.16      P      =  552.05      RN/L   =  3.0273

 SECTION ( 1)LEFT WING BOT SURF              DEPENDENT VARIABLE CP

2Y/BW         .2990   .3640   .4270   .5340   .6730   .7800   .8870   .9720

  X/CW
    .010       -.0330  -.2389   .4001   .5385   .4820   .5621   .5729
    .020        .0000  -.0624   .4534   .4081   .4259   .4475   .4592   .0826
    .040               -.3159   .3736
    .050        .0679                   .3104   .3154   .3431   .3805
    .069                                                                  .1225
    .080                                .2531
    .081                        .2735
    .086                .1279
    .094        .0625
    .150                                .2137   .2768   .3010   .2905
    .157                                                                 -.0544
    .163                .2905
    .177                        .2058
    .229        .0590
    .246                .1732
    .250                                .2223   .2350   .2748   .2359
    .274                        .2055
    .345                                                                  .0932
    .390                .1847
```

```
                        AMES 11-073(OA148) -140A/B/C/R ORB LEFT WING BOT            (XEBL46)
ALPHA ( 4) =    7.898   BETA  ( 1) =   -3.868
 SECTION ( 1)LEFT WING BOT SURF              DEPENDENT VARIABLE CP
2Y/BW       .2990   .3640   .4270   .5340   .6730   .7800   .8870   .9720
 X/CW
   .400
   .402                     .1980   .2200   .2889           .2255
   .503
   .550                                                             .0410
   .565                             .2023   .1868
   .600                    -.5153
   .637                                                     .0840
   .650             .1758
   .670                                             .1043
   .700                                                             .0148
   .725                                     .0313
   .750                             .0177
   .760                                             .1345   .1296
   .775                    -.0025
   .798                             .2025   .0953
   .808             .0363
   .814                     .1468
   .839     .0202
   .850             .0528
   .857                             .0004  -.0401  -.0450
   .862                     .0292
   .865
   .879     .1170                                                  -.1750
   .900             .0005
   .905    -.0081                  -.1155                  -.1125
   .919                    -.0945
   .950            -.1107
   .953                            -.1849  -.1514  -.2013
   .955                    -.1820
   .965            -.1505
  1.000    -.0959
                           -.1042          -.2133          -.5101
ALPHA ( 4) =    8.000   BETA  ( 2) =    .178  MACH  =  1.2462   Q    =  600.16   P    =  552.05   RN/L  =  3.0273
 SECTION ( 1)LEFT WING BOT SURF              DEPENDENT VARIABLE CP
2Y/BW       .2990   .3640   .4270   .5340   6730    .7800   .8870   .9720
 X/CW
   .010    -.2182  -.4642   .2222   .5446   4940    .5512   .5588
   .020     .0000  -.2040   .3349   .4427   .4467   .4522   .4639  -.0451
   .040            -.1434   .3256
   .050    -.0214                   .3427   .3417   .3513   .3899
   .060                                                             .0197
   .080                             .2842
```

AMES 11-073(OA148) -140A/B/C/R ORB LEFT WING BOT (XE8L48)

ALPHA (4) = 8.000 BETA (2) = .178

SECTION (1)LEFT WING BOT SURF DEPENDENT VARIABLE CP

2Y/BW	.2990	.3640	.4270	.5340	.6730	.7800	.8870	.9720
X/CW								
.081			.2500					
.086		.0372						
.094	.00 3							
.150				.2434	.2824	.3062	.2973	
.157								-.0829
.163		.2383						
.177			.2099					
.229	.0253							
.246		.1520						
.250				.2284	.2503	.2863	.2344	
.274			.2177					
.345								.0421
.390		.1989						
.400				.2409	.2898		.2140	
.402			.2158					
.503								-.0018
.550				.2100	.2004			
.565			-.5615					
.600							.0727	
.637		.1947						
.650						.1036		
.670								-.0117
.700					.0365			
.725				.0190				
.750						.1150	.1055	
.760			.0041					
.775				.2060	.1055			
.798		.0420						
.808			.1546					
.834	.0171							
.839		.0519						
.850				.0239	-.0477	-.0616		
.857			.0284					
.862								-.2177
.865	.0993							
.879		-.0043						
.900	.0116			-.1165			-.1255	
.905			-.0954					
.919		-.0893						
.950				-.1856	-.1367	-.1847		
.953			-.1651					
.955		-.1360						
.965	-.1068							
1.000			-.1818		-.1416		-.4950	

AMES 11-073(OA148) -140A/B/C/R ORB LEFT WING BOT (XE8L48)

ALPHA (4) = 8.003 BETA (3) = 4.235 MACH = 1.2462 Q = 600.16 P = 552.05 RN/L = 3.0273

SECTION (1)LEFT WING BOT SURF DEPENDENT VARIABLE CP

2Y/BW	.2990	.3640	.4270	.5340	.6730	.7800	.8870	.9720
X/CW								
.010	-.3964	-.5252	.0671	.5107	.4755	.5264	.5299	
.020	.0000	-.3065	.2025	.4291	.4366	.4513	.4659	-.1980
.040		-.2387	.2587					
.050	-.1047			.3470	.3423	.3648	.3938	
.069								-.0884
.080				.2872				
.081			.2074					
.086		-.0353						
.094	-.0595							
.150				.2485	.2846	.3223	.2996	
.157								-.1203
.163		.1849						
.177			.2079					
.229	-.0153							
.246		.1301						
.250				.2355	.2806	.2946	.2354	
.274			.2216					
.345								-.0076
.390		.1962						
.400				.2507	.2856		.2039	
.402			.2313					
.503								-.0466
.550				.2030	.1957			
.565			-.5082					
.600							.0520	
.637		.1882						
.650						.0898		
.670								-.0488
.700					.0354			
.725				.0248				
.750						.1087	.0931	
.760			.0149					
.775				.2025	.1139			
.798		.0337						
.808			.1443					
.834	.0130							
.839		.0496						
.850				.0227	-.0584	-.0732		
.857			.0248					
.862								-.2531
.865	.0883							
.879		-.0023						
.900	.0156			-.1094			-.1406	
.905			-.0922					
.919		-.0839						

```
                                        AMES 11-073(OA148) -140A/B/C/R ORB LEFT WING BOT          (XE8L48)

ALPHA ( 4) =     8.003    BETA  ( 3) =     4.235

 SECTION ( 1)LEFT WING BOT SURF              DEPENDENT VARIABLE CP

2Y/BW         .2990   .3640   .4270   .5340   .6730   .7800   .8870   .9720

  X/CW
    .950                              -.1945  -.1358  -.1762
    .953                      -.1505
    .955              -.1276
    .955      -.1124
   1.000                      -.1638          -.1452          -.4750

ALPHA ( 5) =    11.933    BETA  ( 1) =    -3.854   MACH  =  1.2450     Q      =  599.95     P      =  552.98     RN/L   =  3.028

 SECTION ( 1)LEFT WING BOT SURF              DEPENDENT VARIABLE CP

2Y/BW         .2990   .3640   .4270   .5340   .6730   .7800   .8870   .9720

  X/CW
    .010     -.1754  -.4028   .2960   .6920   .6913   .7452   .7292
    .020      .0000  -.1090   .4479   .6003   .6413   .6746   .6732  -.0352
    .040             -.0385   .4669
    .050      .0751                   .4989   .5397   .5749   .5870
    .069                                                              .0763
    .080                              .4344
    .081                      .3999
    .086              .1559
    .094      .1035
    .150                              .3922   .4597   .4934   .4494
    .157                                                             -.0492
    .163              .3793
    .177                      .3484
    .220      .1295
    .246              .2831
    .250                              .3794   .4266   .4386   .3756
    .274                      .3416
    .345                                                              .1399
    .390              .3196
    .400                              .3747   .4003           .3312
    .402                      .3650
    .503                                                              .0938
    .550                              .3031   .2992
    .565                     -.5465
    .600                                                      .1606
    .637              .2894
    .650                                              .1817
    .670                                                              .0803
    .700                                      .1061
    .725                              .0850
    .750                                              .2287   .1999
    .760                      .0572
```

```
DATE 10 FEB 76              TABULATED PRESSURE DATA - OA148 ( AMES 11-073-1 )                                        PAGE 2359

                                      AMES 11-073(OA148) -140A/B/C/R ORB LEFT WING BOT               (XE8L48)

ALPHA ( 5) =    11.933    BETA  ( 1) =    -3.854

 SECTION ( 1)LEFT WING BOT SURF              DEPENDENT VARIABLE CP

2Y/BW        .2990   .3640   .4270   .5340   .6730   .7800   .8870   .9720

  X/CW
    .775                                .3111   .1741
    .798             .1110
    .808                     .2297
    .834     .0856
    .839             .1203
    .850                                .0803   .0257   .0137
    .857                     .0960
    .862                                                                -.1472
    .865     .1770
    .879             .0592
    .900     .0679                     -.0612                   -.0546
    .905                    -.0521
    .919            -.0411
    .950                               -.1236  -.0840  -.1116
    .953                    -.1277
    .955            -.0985
    .965    -.0632
   1.000                    -.1492             -.3064           -.5853
ALPHA ( 5) =    11.941    BETA  ( 2) =      .176   MACH    =  1.2450     Q      =  599.95     P      =  552.98     RN/L   =  3.0281

 SECTION ( 1)LEFT WING BOT SURF              DEPENDENT VARIABLE CP

2Y/BW        .2990   .3640   .4270   .5340   .6730   .7800   .8870   .9720

  X/CW
    .010    -.3510  -.4935   .1024   .6210   .6383   .6645   .6435
    .020     .0000  -.2220   .2828   .5666   .6142   .6366   .6229  -.1954
    .040            -.1502   .3711
    .050    -.0158                   .4874   .5331   .5539   .5593
    .069                                                             -.0397
    .080                             .4334
    .081                     .3437
    .086             .0713
    .094     .0432
    .150                             .3851   .4585   .4821   .4329
    .157                                                             -.0879
    .163             .3043
    .177                     .3293
    .229     .0831
    .246             .2361
    .250                             .3844   .4164   .4306   .3625
    .274                     .3482
    .345                                                              .0769
    .390             .3227
```

AMES 11-073(OA148) -140A/B/C/R ORB LEFT WING BOT (XEB_48)

ALPHA (5) = 11.941 BETA (2) = .176

SECTION (1)LEFT WING BOT SURF DEPENDENT VARIABLE CP

2Y/BW	.2990	.3640	.4270	.5340	.6730	.7800	.8870	.9720
X/CW								
.400				.3681	.3921		.3110	
.402			.3678					
.503								.0366
.550				.3003	.2900			
.555			-.5881					
.600							.1411	
.637		.2857						
.650						.1661		
.670								.0340
.700					.1146			
.725				.0903				
.750						.2148	.1831	
.760			.0736					
.775				.3143	.1848			
.793		.1042						
.808			.2265					
.834	.0824							
.839		.1154						
.850				.0851	.0220	.0026		
.857			.0925					
.862								-.1890
.865	.1610							
.879		.0585						
.900	.0779			-.0645			-.0702	
.905			-.0429					
.919		-.0293						
.940				-.1318	-.0889	-.1077		
.943			-.1098					
.955		-.0874						
.965	-.0605							
1.000			-.1669		-.2085		-.6078	

ALPHA (5) = 11.935 BETA (3) = 4.253 MACH = 1.2450 Q = 599.95 P = 552.98 RN/L = 3.0281

SECTION (1)LEFT WING BOT SURF DEPENDENT VARIABLE CP

2Y/BW	.2990	.3640	.4270	.5340	.6730	.7800	.8870	.9720
X/CW								
.010	-.4605	-.5425	-.0861	.5203	.5595	.5629	.5417	
.020	.0000	-.3269	.1279	.5061	.5589	.5878	.5577	-.3179
.040		-.2527	.2786					
.050	-.0988			.4567	.5154	.5249	.5239	
.069								-.1413
.080				.4140				

DATE 10 FEB 76 TABULATED PRESSURE DATA - OA148 (AMES 11-073-1)

AMES 11-073(OA148) -140A/B/C/R ORB LEFT WING BOT (XEBL48)

ALPHA (5) = 11.936 BETA (3) = 4.253

SECTION (1)LEFT WING BOT SURF DEPENDENT VARIABLE CP

2Y/BW	.2990	.3640	.4270	.5340	.6730	.7800	.8870	.9720
X/CW								
.081			.2543					
.086		-.0124						
.094	-.0285							
.150				.3736	.4456	.4698	.4065	
.157								-.1318
.163		.2353						
.177			.2982					
.229	.0367							
.246		.1917						
.250				.3710	.4040	.4174	.3438	
.274			.3402					
.345								.0242
.390		.3118						
.400				.3531	.3759		.2878	
.402			.3558					
.503								-.0047
.550				.2848	.2794			
.565			-.5402					
.600							.1249	
.637		.2750						
.650						.1578		
.670								.0034
.700					.1202			
.725				.0930				
.750						.2008	.1632	
.760			.0762					
.775				.3008	.1959			
.798		.0963						
.808			.2136					
.834	.0712							
.839		.1125						
.850				.0821	.0121	.0199		
.857			.0880					
.862								-.2180
.865	.1520							
.879		.0623						
.900	.0823			-.0598			-.0879	
.905			-.0310					
.919		-.0256						
.940				-.1404	-.0861	-.1096		
.953			-.0936					
.955		-.0754						
.965	-.0576							
1.000			-.2304		-.1263		-.5579	

AMES 11-073(CA148) -140A/B/C/R ORB LEFT WING BOT (XE8L49) (05 AUG 75)

REFERENCE DATA

SREF =	2690.0000 SQ.FT.	XMRP =	1076.6800 IN. XO
LREF =	474.8000 IN.	YMRP =	.0000 IN. YO
BREF =	936.0680 IN.	ZMRP =	375.0000 IN. ZO
SCALE =	.0300		

PARAMETRIC DATA

RUDDER =	-10.000	SPDBRK =	85.000
BDFLAP =	16.300	L-ELVN =	4.000
R-ELVN =	4.000	MACH =	1.100

ALPHA (1) = -4.022 BETA (1) = -3.848 MACH = 1.1001 Q = 600.26 P = 708.59 RN/L = 3.1930

SECTION (1)LEFT WING BOT SURF DEPENDENT VARIABLE CP

2Y/BW	.2990	.3640	.4270	.5340	.6730	.7800	.8870	.9720
X/CW								
.010	-.1820	-.3325	-.2903	-.6186	-.7374	-.5614	-.5484	
.020	.0000	-.3145	-.3952	-.7748	-.7856	-.8000	-.8076	-.8406
.040		-.2987	-.4156					
.050	-.1843			-.7262	-.8027	-.8333	-.8341	
.069								-.9248
.080				-.7024				
.081			-.3037					
.086		-.1478						
.094	-.1841							
.150				-.4735	-.6943	-.7324	-.7635	
.157								-.5368
.163		-.0708						
.177			-.2491					
.229	-.1532							
.246		-.1435						
.250				-.2700	-.5858	-.6698	-.6976	
.274			-.1960					
.345								-.8514
.390		-.1482						
.400				-.1565	-.1660		-.6183	
.402			-.1295					
.503								-.8236
.550				-.1297	-.1542			
.565			-.4550					
.600							-.3368	
.637		-.1078						
.650						-.1762		
.670								-.6599
.700					-.2445			
.725				-.2802				
.750						-.0692	-.0972	
.760			-.2650					
.775				-.1802	-.1764			
.798		-.2019						
.803			-.1898					
.834	-.2387							
.839		-.2406						
.850				-.2823	-.2521	-.2523		

```
                         AMES 11-073(OA148) -140A/B/C/R ORB LEFT WING BOT              (XE8L49)

ALPHA ( 1) =   -4.022   BETA  ( 1) =   -3.848

 SECTION ( 1)LEFT WING BOT SURF          DEPENDENT VARIABLE CP

2Y/BW        .2990   .3640   .4270   .5340   .6730   .7800   .8870   .9720

  X/CW
    .857                     -.2747
    .862                                                             -.4446
    .865    -.1759
    .879             -.2729
    .900    -.2588                   -.3636                  -.2928
    .905                     -.3695
    .919             -.3669
    .950                             -.3740  -.3206  -.3898
    .953                     -.4122
    .955             -.3445
    .965    -.3188
   1.000                     -.0118          -.0238          -.0845
ALPHA ( 1) =   -4.022   BETA  ( 2) =     .189   MACH   =  1.1001    Q    =  600.26    P    =  708.59    RN/L   =  3.1930

 SECTION ( 1)LEFT WING BOT SURF          DEPENDENT VARIABLE CP

2Y/BW        .2990   .3640   .4270   .5340   .6730   .7800   .8870   .9720

  X/CW
    .010    -.1305  -.1652  -.1297  -.6125  -.7610  -.6042  -.6079
    .020     .0000  -.1664  -.1406  -.7675  -.8123  -.8343  -.8497  -.9064
    .040            -.1480  -.2530
    .050    -.1317                  -.6812  -.8173  -.8638  -.8798
    .069                                                             -.8920
    .080                             -.6436
    .081                     -.1856
    .086             -.0476
    .090    -.1362
    .150                             -.2910  -.6812  -.7589  -.7903
    .157                                                             -.5310
    .163              .0254
    .177                     -.1806
    .229    -.1078
    .246             -.0812
    .250                             -.1752  -.2234  -.6084  -.7303
    .274                     -.1283
    .345                                                             -.8675
    .330             -.0934
    .400                             -.1210  -.1211          -.3995
    .402                     -.1066
    .503                                                             -.7461
    .550                             -.1168  -.1456
    .565                     -.5440
    .600                                                     -.1513
```

```
DATE 10 FEB 76            TABULATED PRESSURE DATA - OA148 ( AMES 11-073-1 )                              PAGE 2364

                                   AMES 11-073(OA148) -140A/B/C/R ORB LEFT WING BOT                (XEBL49)

ALPHA ( 1) =   -4.022    BETA  ( 2) =     .189

 SECTION ( 1)LEFT WING BOT SURF              DEPENDENT VARIABLE CP

2Y/BW        .2990   .3640   .4270   .5340   .6730   .7800   .8870   .9720

  X/CW
   .637              -.1059
   .650                                                      -.1738
   .670                                                                      -.4422
   .700                                              -.2452
   .725                                      -.2721
   .750                                                      -.0927  -.0362
   .760                      -.2639
   .775                                      -.1804  -.1847
   .798              -.2033
   .808                      -.1792
   .834      -.2323
   .839              -.2269
   .850                                      -.2837  -.2731  -.2636
   .857                      -.2710
   .862                                                                      -.3727
   .865      -.1659
   .879              -.2739
   .900      -.2564                          -.3683                  -.3350
   .905                      -.3689
   .919              -.3721
   .950                                      -.4200  -.3329  -.3940
   .953                      -.4141
   .955              -.3579
   .965      -.3261
  1.000                      -.0753                  -.1329          -.1407
ALPHA ( 1) =   -4.029    BETA  ( 3) =    4.271   MACH   =  1.1001      Q      =  600.26      P      =  708.59     RN/L   =  3.1930

 SECTION ( 1)LEFT WING BOT SURF              DEPENDENT VARIABLE CP

2Y/BW        .2990   .3640   .4270   .5340   .6730   .7800   .8870   .9720

  X/CW
   .010      -.1244  -.0661   .0427  -.5832  -.7748  -.6382  -.6536
   .020       .0000  -.0594   .0127  -.7100  -.8114  -.8539  -.8765  -.8250
   .040              -.0375  -.1007
   .050      -.1051                  -.5821  - 7499  -.8416  -.8517
   .069                                                              -.7447
   .080                              -.2883
   .091                      -.0783
   .086               .0598
   .094      -.1095
   .150                              -.2188  -.3095  -.6446  -.7993
   .157                                                              -.4329
   .163               .1210
```

REPRODUCIBILITY OF THE ORIGINAL PAGE IS POOR

```
DATE 10 FEB 76          TABULATED PRESSURE DATA - OA148 ( AMES 11-073-1 )

                              AMES 11-073(OA148) -140A/B/C/R ORB LEFT WING BOT              (XE8L49)

ALPHA ( 1) =   -4.029   BETA  ( 3) =    4.271

 SECTION ( 1)LEFT WING BOT SURF            DEPENDENT VARIABLE CP

2Y/BW       .2990   .3640   .4270   .5340   .6730   .7800   .8870   .9720

  X/CW
    .177                   -.1045
    .229   -.0712
    .246           -.0002
    .250                           -.1385  -.1942  -.2688  -.4826
    .274                   -.0719
    .345                                                           -.6036
    .390           -.0344
    .400                           -.1075  -.1190          -.2365
    .402                   -.0809
    .503                                                           -.4925
    .550                           -.1268  -.1540
    .565                   -.4130
    .600                                                   -.2020
    .637           -.1128
    .650                                           -.1987
    .670                                                           -.2882
    .700                                   -.2670
    .725                           -.2798
    .750                                           -.1306  -.1200
    .760                   -.2747
    .775                           -.1890  -.2129
    .798           -.2083
    .808                   -.1771
    .834   -.2463
    .839           -.2411
    .850                           -.2992  -.3010  -.2962
    .857                   -.2712
    .862                                                           -.3552
    .865   -.1960
    .879           -.2801
    .900   -.2752                  -.3942                  -.3500
    .905                   -.3863
    .919           -.3580
    .950                           -.4521  -.3464  -.4025
    .953                   -.4323
    .955           -.3656
    .965   -.3581
   1.000                   -.1783          -.2303          -.1687
```

```
                                      AMES 11-073(OA148) -140A/B/C/R ORB LEFT WING BOT            (XEBL49)

ALPHA ( 2) =     .025    BETA  ( 1) =    -3.866   MACH   =  1.1003     Q     =  600.53     P     =  708.60     RN/L   =  3.1951

 SECTION ( 1)LEFT WING BOT SURF             DEPENDENT VARIABLE CP

2Y/BW          .2990     .3640     .4270     .5340     .6730     .7800     .8870     .9720

  X/CW
    .010      -.0502    -.0119     .2029    -.3344    -.4702    -.4005    -.3123
    .020       .0000    -.0426     .1228    -.4941    -.5560    -.5609    -.5983    -.4204
    .040                -.0303    -.0718
    .050      -.0885                        -.3199    -.4706    -.5621    -.6023
    .069                                                                            -.4251
    .080                                    -.2602
    .081                          -.0656
    .086                 .0252
    .094      -.1098
    .150                                    -.1799    -.2209    -.3771    -.4677
    .157                                                                            -.2410
    .163                 .0888
    .177                          -.0848
    .229      -.0820
    .246                -.0310
    .250                                    -.0596    -.1058    -.0956    -.1202
    .274                          -.0434
    .345                                                                            -.0845
    .390                -.0154
    .400                                    -.0031     .0112              -.0268
    .402                           .0032
    .503                                                                            -.1483
    .550                                    -.0086    -.0413
    .565                          -.5150
    .600                                                                  -.1185
    .637                -.0045
    .650                                                        -.0952
    .670                                                                            -.1927
    .700                                              -.1547
    .725                                    -.1866
    .750                                                        -.0229    -.0557
    .760                          -.2025
    .775                                    -.0415    -.0933
    .798                -.1422
    .808                          -.0661
    .824      -.1741
    .839                -.1555
    .850                                    -.2074    -.1982    -.2471
    .857                          -.1621
    .862                                                                            -.3335
    .865      -.0805
    .879                -.1930
    .900      -.1765                        -.3034                        -.3081
    .905                          -.2907
    .919                -.2953
```

AMES 11-073(OA148) -140A/B/C/R ORB LEFT WING BOT (XEBL49)

ALPHA (2) = .025 BETA (' = -3.866

SECTION (1)LEFT WING BOT SURF DEPENDENT VARIABLE CP

2Y/BW	.2990	.3640	.4270	.5340	.6730	.7800	.8870	.9720
X/CW								
.950				-.3343	-.2840	-.3797		
.953			-.3592					
.955		-.3020						
.965	-.2592							
1.000			.0287		.0048		-.1195	

ALPHA (2) = .030 BETA (2) = .186 MACH = 1.1003 Q = 600.53 P = 708.60 RN/L = 3.1951

SECTION (1)LEFT WING BOT SURF DEPENDENT VARIABLE CP

2Y/BW	.2990	.3640	.4270	.5340	.6730	.7800	.8870	.9720
X/CW								
.010	-.0977	-.0102	.2838	-.2731	-.4481	-.4227	-.3302	
.020	.0000	-.0173	.2176	-.2552	-.4234	-.5503	-.5926	-.2220
.040		-.0012	.0625					
.050	-.1058			-.2359	-.3644	-.4537	-.4707	
.069								-.2107
.080				-.1552				
.081			-.0020					
.086		.0556						
.094	-.1088							
.150				-.1101	-.0995	-.0688	-.1212	
.157								-.1587
.163		.1556						
.177			-.0369					
.229	-.0623							
.246		.0228						
.250				-.0319	-.0636	-.0706	-.1184	
.274			-.0041					
.345								-.0915
.390		.0233						
.400				-.0017	.0334		-.0223	
.402			.0044					
.503								-.1630
.550				-.0191	-.0353			
.565			-.6233					
.600							-.1432	
.637		-.0102						
.650						-.1094		
.670								-.1830
.700					-.1620			
.725				-.1906				
.750						-.0494	-.0884	
.763			-.1945					

```
                           AMES 11-073(OA148) -140A/B/C/R ORB LEFT WING BOT          (XE8L49)

ALPHA ( 2) =      .030    BETA  ( 2) =      .186

 SECTION ( 1)LEFT WING BOT SURF          DEPENDENT VARIABLE CP

2Y/BW      .2990   .3640   .4270   .5340   .6730   .7800   .8870   .9720

  X/CW
    .775                          -.0496  -.1068
    .798          -.1420
    .808                  -.0766
    .834  -.1765
    .843          -.1420
    .850                          -.2055  -.2154  -.2549
    .847                  -.1767
    .852                                                          -.3572
    .865  -.0861
    .879          -.1947
    .900  -.1857                  -.3099                  -.3101
    .905                  -.2783
    .919          -.2920
    .940                          -.3574  -.2853  -.3677
    .953                  -.3600
    .955          -.2844
    .965  -.2589
   1.000                  -.0280          -.0324          -.0886
ALPHA ( 2) =      .026    BETA  ( 3) =     4.247   MACH   =  1.1003      Q      =  600.53      P      =  708.60      RN/L   =  3.1951

 SECTION ( 1)LEFT WING BOT SURF          DEPENDENT VARIABLE CP

2Y/BW      .2990   .3640   .4270   .5340   .6730   .7800   .8870   .9720

  X/CW
    .010  -.2058  -.0454   .3350  -.0722  -.3028  -.3585  -.2907
    .020   .0000  -.0237   .2894  -.0995  -.2420  -.3538  -.4584  -.1644
    .040           .0044   .1546
    .050  -.1474                  -.0868  -.2306  -.2624  -.3405
    .069                                                          -.1713
    .080                          -.0677
    .081                   .0739
    .086           .0907
    .094  -.1213
    .150                          -.0223  -.0399  -.0799  -.1177
    .157                                                          -.1743
    .163           .2013
    .177                   .0390
    .229  -.0632
    .246           .0737
    .250                           .0078  -.0383  -.0575  -.1061
    .274                   .0505
    .345                                                          -.1321
    .390           .0638
```

```
                                   AMES 11-073(OA148) -140A/B/C/R ORB LEFT WING BOT              (XEBL49)

ALPHA ( 2) =      .026    BETA  ( 3) =    4.247

 SECTION ( 1)LEFT WING BOT SURF             DEPENDENT VARIABLE CP

2Y/BW        .2990   .3540   .4270   .5340   .6730   .7800   .9870   .9720

  X/CW
    .400                             .0212   .0234          -.0478
    .402                     .0378
    .503                                                            -.1925
    .550                            -.0243  -.0503
    .565                    -.4928
    .600                                                    -.1450
    .637            -.0168
    .650                                            -.1361
    .670                                                            -.2060
    .700                                    -.1916
    .725                            -.2057
    .750                                            -.0905  -.1250
    .760                    -.2013
    .775                            -.0782  -.1382
    .798            -.1503
    .809                    -.0828
    .834   -.1826
    .839            -.1527
    .850                            -.1925  -.2535  -.2801
    .857                    -.1947
    .862                                                            -.3943
    .865   -.1100
    .879            -.1933
    .900   -.1961                   -.3340                  -.3460
    .905                    -.3167
    .919            -.3067
    .950                            -.3962  -.3078  -.3866
    .953                    -.3835
    .955            -.3256
    .955   -.2995
   1.000                    -.1439          -.1525          -.1507
 ALPHA ( 3) =    3.995   BETA  ( 1) =   -3.867   MACH   =  1.1004    Q     =  600.49    P     =  708.37    RN/L   =  3.1949

 SECTION ( 1)LEFT WING BOT SURF             DEPENDENT VARIABLE CP

2Y/BW        .2990   .3640   .4270   .5340   .6730   .7800   .8870   .9720

  X/CW
    .010   -.0308  -.0677   .4635   .1892   .1077   .1987   .2443
    .020    .0000  -.0072   .4099   .0529   .0887   .0985   .1038   .0685
    .040             .0168   .2435
    .050   -.0225                   .0400   .0402   .0770   .1029
    .060                                                            .0363
    .100                            .0428
```

```
                                  AMES 11-073(OA148) -140A/B/C/R ORB LEFT WING BOT            (XEBL49)

ALPHA ( 3) =    3.995    BETA  ( 1) =   -3.857

 SECTION ( 1)LEFT WING BOT SURF               DEPENDENT VARIABLE CP

2Y/BW        .2990   .3640   .4270   .5340   .6730   .7800   .8870   .9720

  X/CW
   .081                      .1433
   .085              .1186
   .094     -.0396
   .150                              .1007   .1254   .1389   .0981
   .157                                                              -.0923
   .153              .2329
   .177                      .0898
   .229     -.0396
   .246              .0929
   .250                              .1433   .1408   .1335   .0806
   .274                      .1454
   .345                                                              -.0072
   .390              .514
   .400                              .1580   .1699           .0900
   .402                      .1801
   .503                                                              -.0787
   .550                              .0890   .0642
   .565                     -.5910
   .600                                                     -.0604
   .637              .1000
   .650                                             -.0335
   .670                                                              -.0661
   .700                                     -.1147
   .725                             -.1197
   .750                                              .0338   .0066
   .760                     -.1494
   .775                              .0815  -.0157
   .798             -.0957
   .808                      .0180
   .814     -.1078
   .839             -.0642
   .850                             -.1298  -.1471  -.2012
   .857                     -.1059
   .862                                                              -.3028
   .855      .0032
   .879             -.1260
   .900     -.1258                  -.2543                  -.2545
   .905                     -.2496
   .919             -.2524
   .950                             -.3137  -.2225  -.3146
   .953                     -.3291
   .955             -.2720
   .965     -.2224
  1.000                      .0422          -.0053          -.3580
```

REPRODUCIBILITY OF THE
ORIGINAL PAGE IS POOR

DATE 10 FEB 76 TABULATED PRESSURE DATA - OA148 (AMES 11-073-1)

AMES 11-073(OA148) -140A/B/C/R ORB LEFT WING BOT (XEBL49)

ALPHA (3) = 3.996 BETA (2) = .185 MACH = 1.1004 Q = 600.49 P = 708.37 RN/L = 3.1949

SECTION (1)LEFT WING BOT SURF DEPENDENT VARIABLE CP

2Y/BW	.2990	.3640	.4270	.5340	.6730	.7800	.8870	.9720
X/CW								
.010	-.1688	-.1971	.4374	.2733	.1813	.2493	.2933	
.020	.0000	-.0866	.4239	.1601	.1493	.1805	.1585	.0015
.040		-.0460	.2984					
.050	-.0862			.1267	.1032	.1325	.1389	
.069								-.0025
.080				.1107				
.091			.1842					
.086		.0956						
.094	-.0816							
.150				.1345	.1628	.1656	.1136	
.157								-.1110
.163		.2507						
.177			.1426					
.229	-.0531							
.246		.1361						
.250				.1521	.1524	.1410	.0741	
.274			.1549					
.345								-.0516
.390		.1578						
.400				.1592	.1708		.0779	
.432			.1731					
.503								-.1187
.550				.0973	.0618			
.565			-.6783					
.600							-.0750	
.637		.0876						
.650						-.0422		
.670								-.0997
.700					-.1079			
.725				-.1197				
.750						-.0015	-.0162	
.760			-.1311					
.775				.0790	-.0117			
.798		-.0804						
.809			.0268					
.834	-.1054							
.839		-.0607						
.850				-.1239	-.1687	-.1958		
.857			-.0999					
.862								-.3494
.865	-.0109							
.873		-.1215						
.900	-.1090			-.2588			-.2743	
.905			-.2434					
.919		-.2297						

```
DATE 10 FEB 76            TABULATED PRESSURE DATA - OA148 ( AMES 11-073-1 )
                                 AMES 11-073(OA148) -140A/B/C/R ORB LEFT WING BOT                (XEBL49)

ALPHA ( 3) =    3.996    BETA  ( 2) =      .185

 SECTION ( 1)LEFT WING BOT SURF             DEPENDENT VARIABLE CP

2Y/BW        .2990   .3640   .4270   .5340   .6730   .7800   .8870   .9720

  X/CW
    .950                            -.3312  -.2273  -.3330
    .953                    -.3168
    .955            -.2628
    .965    -.2311
   1.000                     .0235           .0041          -.3750
ALPHA ( 3) =    3.999    BETA  ( 3) =    4.239   MACH   =  1.1004     Q      =  600.49     P      =  708.37     RN/L   =  3.1949

 SECTION ( 1)LEFT WING BOT SURF             DEPENDENT VARIABLE CP

2Y/BW        .2990   .3640   .4270   .5340   .6730   .7800   .8870   .9720

  X/CW
    .010    -.3550  -.3328   .3799   .3792   .2693   .3192   .3209
    .020     .0000  -.1781   .4120   .2713   .2386   .2236   .2209  -.1383
    .040            -.1381   .3289
    .050    -.1725                   .2177   .1733   .1629   .1783
    .069                                                            -.1000
    .080                             .1890
    .081                     .2529
    .086             .0631
    .094    -.1439
    .150                             .1756   .1675   .1658   .1066
    .157                                                            -.1524
    .163             .2644
    .177                     .2043
    .229    -.0821
    .246             .1901
    .250                             .1748   .1500   .1483   .0657
    .274                     .1894
    .345                                                            -.1146
    .390             .1965
    .400                             .1509   .1555           .0555
    .402                     .1790
    .503                                                            -.1666
    .550                             .0822   .0541
    .565                    -.5679
    .600                                                    -.0948
    .637             .0878
    .650                                            -.0602
    .670                                                            -.1503
    .700                                    -.1137
    .725                            -.1259
    .750                                            -.0278  -.0461
    .760                    -.1255
```

DATE 10 FEB 76 TABULATED PRESSURE DATA - OA148 (AMES 11-073-1)

AMES 11-073(OA148) -140A/B/C/R ORB LEFT WING BOT (XEBL49)

ALPHA (3) = 3.999 BETA (3) = 4.239

SECTION (1)LEFT WING BOT SURF DEPENDENT VARIABLE CP

2Y/BW	.2990	.3640	.4270	.5340	.6730	.7800	.8870	.9720
X/CW								
.775				.0690	-.0263			
.798		-.0897						
.808			.0074					
.834	-.1114							
.839		-.0739						
.850				-.1309	-.1818	-.2044		
.857			-.1109					
.862								-.3942
.865	-.0290							
.879		-.1350						
.900	-.1154			-.2728			-.2943	
.905			-.2461					
.919		-.2345						
.950				-.3450	-.2711	-.3451		
.953			-.3174					
.955		-.2671						
.965	-.2563							
1.000			-.0953		-.0617		-.3871	

ALPHA (4) = 7.942 BETA (1) = -3.865 MACH = 1.1006 Q = 600.80 P = 708.61 RN/L = 3.1953

SECTION (1)LEFT WING BOT SURF DEPENDENT VARIABLE CP

2Y/BW	.2990	.3640	.4270	.5340	.6730	.7800	.8870	.9720
X/CW								
.010	-.1282	-.3885	.4628	.6044	.5674	.6285	.6033	
.020	.0000	-.1546	.5315	.4878	.5133	.5172	.5076	-.0274
.040		-.0967	.4689					
.050	.0099			.3953	.4084	.4190	.4112	
.069								.0363
.080				.3445				
.081			.3710					
.086		.0967						
.094	.0077							
.150				.3175	.3426	.3506	.2876	
.157								-.0846
.163		.3575						
.177			.3080					
.229	.0134							
.246		.2732						
.250				.3061	.3004	.2953	.2281	
.274			.2976					
.345								.0207
.390		.2885						

AMES 1:-073(OA148) -140A/B/C/R ORB LEFT WING BOT (XE8L49)

ALPHA (4) = 7.942 BETA (1) = -3.865

SECTION (1)LEFT WING BOT SURF DEPENDENT VARIABLE CP

2Y/BW	.2990	.3640	.4270	.5340	.6730	.7800	.8870	.9720
X/CW								
.400				.2687	.2721		.1860	
.402			.2910					
.503								-.0334
.550				.1772	.1618			
.565			-.6280					
.600							.0049	
.637		.1756						
.650						.0317		
.670								-.0289
.720					-.0483			
.725				-.0623				
.750						.0928	.0684	
.760			-.0875					
.775				.1987	.0603			
.788		-.0239						
.808			.1102					
.834	-.0515							
.839		-.0044						
.850				-.0665	-.1004	-.1573		
.857			-.0456					
.862								-.2829
.855	.0627							
.879		-.0664						
.900	-.0454			-.2029			-.2076	
.905			-.2016					
.919		-.1905						
.950				-.2786	-.2104	-.2553		
.953			-.2684					
.955		-.2254						
.965	-.1806							
1.000			.0141		-.1781		-.4832	

ALPHA (4) = 8.042 BETA (2) = .178 MACH = 1.1006 Q = 600.80 P = 708.61 RN/L = 3.1953

SECTION (1)LEFT WING BOT SURF DEPENDENT VARIABLE CP

2Y/BW	.2990	.3640	.4270	.5340	.6730	.7800	.8870	.9720
X/CW								
.010	-.3420	-.6378	.3012	.6066	.5610	.5993	.5730	
.020	.0000	-.3139	.4361	.5079	.5241	.5184	.4933	-.1642
.040		-.2392	.4487					
.050	-.0889			.4193	.4181	.4136	.4036	
.069								-.0745
.080				.3646				

DATE 10 FEB 76 TABULATED PRESSURE DATA - OA148 (AMES 11-073-1)

AMES 11-073(OA148) -140A/B/C/R ORB LEFT WING BOT (XE8L49)

ALPHA (4) = 8.042 BETA (2) = .178

SECTION (1)LEFT WING BOT SURF DEPENDENT VARIABLE CP

2Y/BW	.2990	.3640	.4270	.5340	.6730	.7800	.8370	.9720
X/CW								
.081			.3830					
.086		.0082						
.094	-.0569							
.150				.3265	.3490	.3476	.2811	
.157								-.1165
.163		.3439						
.177			.3251					
.229	-.0333							
.246		.2738						
.250				.3073	.3009	.2914	.2136	
.274			.3038					
.345								-.0345
.390		.2932						
.400				.2692	.2670		.1678	
.402			.2901					
.503								-.0751
.550				.1786	.1540			
.565			-.7146					
.600							-.0084	
.637		.1756						
.650						.0195		
.670								-.0698
.700					-.0416			
.725				-.0533				
.750						.0832	.0308	
.760			-.0668					
.775				.2060	.0663			
.798		-.0194						
.808			.1050					
.834	-.0475							
.839		.0016						
.850				-.0658	-.1006	-.1264		
.857			-.0396					
.862								-.3282
.865	.0475							
.879		-.0629						
.900	-.0399			-.2091			-.2293	
.905			-.1965					
.919		-.1774						
.950				-.2776	-.2093	-.2642		
.953			-.2679					
.955		-.2220						
.965	-.1989							
1.000			-.0016		-.0926		-.5088	

AMES 11-073(OA148) -140A/B/C/R ORB LEFT WING BOT (XEBL49)

ALPHA (4) = 8.044 BETA (3) = 4.232 MACH = 1.1006 Q = 600.80 P = 708.61 RN/L = 3.1953

SECTION (1)LEFT WING BOT SURF DEPENDENT VARIABLE CP

2Y/BW	.2990	.3640	.4270	.5340	.6730	.7800	.8870	.9720
X/CW								
.010	-.5551	-.4516	.1700	.5809	.5359	.5443	.5079	
.020	.0000	-.3547	.3424	.5186	.4996	.4909	.4611	-.3452
.040		-.2839	.4080					
.050	-.1939			.4401	.4150	.4038	.3876	
.069								-.2034
.080				.3873				
.081			.3726					
.085		-.0296						
.094	-.1315							
.150				.3349	.3401	.3355	.2570	
.157								-.1672
.163		.3225						
.177			.3355					
.229	-.0722							
.246		.2843						
.250				.3003	.2917	.2791	.1911	
.274			.3065					
.345								-.1033
.390		.3022						
.400				.2493	.2522		.1405	
.402			.2763					
.503								-.1471
.550				.1607	.1368			
.565			-.6254					
.600							-.0375	
.637		.1645						
.650						-.0039		
.670								-.1323
.700					-.0368			
.725				-.0549				
.750						.0584	.0039	
.760			-.0659					
.775				.1794	.0621			
.798		-.0344						
.808			.0812					
.834	-.0607							
.839		-.0126						
.250				-.0795	-.1278	-.1224		
.857			-.0479					
.862								-.3794
.865	.0286							
.879		-.0719						
.900	-.0524			-.2244			-.2386	
.905			-.1945					
.919		-.1806						

```
                                           AMES 11-073(OA148) -140A/B/C/R ORB LEFT WING BOT              (XE8L49)

ALPHA ( 4) =     8.044    BETA  ( 3) =     4.232

 SECTION ( 1)LEFT WING BOT SURF              DEPENDENT VARIABLE CP

2Y/BW         .2990    .3640    .4270    .5340    .6730    .7800    .8870    .9720

  X/CW
    .950                                 -.2951   -.2435   -.2902
    .953                        -.2687
    .955               -.2287
    .965      -.2181
   1.000                        -.0647            -.0739            -.5834

ALPHA ( 5) =    11.980    BETA  ( 1) =    -3.845   MACH   =  1.0980     Q      =  599.65      P      =  710.48      RN/L   =  3.1930

 SECTION ( 1)LEFT WING BOT SURF              DEPENDENT VARIABLE CP

2Y/BW         .2990    .3640    .4270    .5340    .6730    .7800    .8870    .9720

  X/CW
    .010      -.2963   -.5769    .2273    .7390    .7334    .7266    .6792
    .020       .0000   -.2159    .4540    .6929    .6984    .6998    .6566   -.1962
    .040               -.1330    .5495
    .050       .0117                      .5991    .6065    .6058    .5784
    .069                                                                     -.0424
    .080                                  .5338
    .081                         .5060
    .086                .1874
    .094       .0560
    .150                                  .4722    .4970    .4986    .4245
    .157                                                                     -.0892
    .163                .4616
    .177                         .4464
    .229       .0796
    .246                .3918
    .250                                  .4204    .4323    .4207    .3432
    .274                         .4112
    .345                                                                      .0439
    .390                .3970
    .400                                  .3595    .3657             .2644
    .402                         .3788
    .503                                                                      .0116
    .550                                  .2556    .2373
    .565                        -.6786
    .630                                                             .0700
    .637                .2474
    .650                                                    .1117
    .670                                                                      .0074
    .700                                           .0545
    .725                                  .0166
    .750                                                    .1950    .1392
    .760                        -.0183
```

```
                             AMES 11-073(OA148) -140A/B/C/R ORB LEFT WING BOT              (XE8L49)

ALPHA ( 5) =   11.980    BETA  ( 1) =   -3.845

 SECTION ( 1)LEFT WING BOT SURF              DEPENDENT VARIABLE CP

2Y/BW          .2990     .3640     .4270     .5340     .6730     .7800     .8870     .9720

  X/CW
      .775                                   .3305     .1502
      .798               .0387
      .808                         .2025
      .834     .0118
      .839               .0705
      .850                                   .0097    -.0269    -.0526
      .857                         .0172
      .862                                                                          -.2562
      .865     .1271
      .879              -.0013
      .900     .0253                        -.1376                        -.1438
      .905                        -.1367
      .919              -.1285
      .950                                  -.2227    -.1865    -.1981
      .953                        -.2046
      .965              -.1887
      .985    -.1682
     1.000                        -.1249              -.2495              -.5845
ALPHA ( 5) =   11.986    BETA  ( 2) =      .181   MACH   =  1.0980     Q      =  599.65     P      =  710.48     RN/L    =  3.1930

 SECTION ( 1)LEFT WING BOT SURF              DEPENDENT VARIABLE CP

2Y/BW          .2990     .3640     .4270     .5340     .6730     .7800     .8870     .9720

  X/CW
      .010    -.5012    -.6485    -.0082     .6525     .6710     .6318     .5884
      .020     .0000    -.3352     .2725     .6529     .6640     .6486     .5940    -.3437
      .040              -.2455     .4641
      .050    -.0942                         .5956     .6030     .5821     .3400
      .069                                                                          -.1556
      .080                                   .5364
      .081                         .4794
      .086               .0654
      .094    -.0273
      .150                                   .4760     .4916     .4865     .4015
      .157                                                                          -.1155
      .163               .3907
      .177                         .4485
      .229     .0337
      .246               .3661
      .250                                   .4219     .4236     .4100     .3235
      .274                         .4149
      .345                                                                          -.0111
      .390               .3928
```

```
DATE 10 FEB 76            TABULATED PRESSURE DATA - OA148 ( AMES 11-073-1 )                                          PAGE 2379

                                   AMES 11-073(OA148) -140A/B/C/R ORB LEFT WING BOT                   (XEBL49)

ALPHA ( 5) =    11.986    BETA  ( 2) =      .181

 SECTION ( 1)LEFT WING BOT SURF              DEPENDENT VARIABLE CP

2Y/BW        .2990    .3640    .4270    .5340    .6730    .7800    .8870    .9720

  X/CW
    .400                                .3556    .3574             .2389
    .402                       .3766
    .503                                                                    -.0321
    .550                                .2528    .2303
    .565                      -.7381
    .600                                                           .0528
    .637              .2471
    .650                                                  .0993
    .670                                                                    -.0369
    .700                                         .0436
    .725                                .0280
    .750                                                  .1907    .1121
    .760                       .0045
    .775                                .3262    .1542
    .798              .0426
    .828                       .1883
    .834     .0162
    .839              .0791
    .850                               -.0046   -.0337   -.0532
    .857                       .0242
    .862                                                                    -.2828
    .865     .1202
    .879              .0075
    .900     .0372                     -.1374                     -.1608
    .905                      -.1350
    .919             -.1208
    .940                               -.2238   -.1816   -.2064
    .944                      -.1974
    .955             -.1771
    .965    -.1587
   1.000                      -.0664            -.1814            -.6118
ALPHA ( 5) =    11.982    BETA  ( 3) =    4.250    MACH   =  1.0980     Q     =  599.65      P      =  710.48      RN/L   =  3.1930

 SECTION ( 1)LEFT WING BOT SURF              DEPENDENT VARIABLE CP

2Y/BW        .2990    .3640    .4270    .5340    .6730    .7800    .8870    .9720

  X/CW
    .010    -.6430   -.6689   -.1655    .5706    .5757    .5143    .4682
    .020     .0000   -.4577    .1383    .5982    .5943    .5736    .5114   -.4796
    .040             -.3673    .4145
    .050    -.1978                      .5586    .5569    .5296    .4861
    .069                                                                    -.2749
    .090                                .5073
```

```
DATE 10 FEB 76              TABULATED PRESSURE DATA - OA148 ( AMES 11-073-1 )                          PAGE 2380

                                      AMES 11-073(OA148) -140A/B/C/R ORB LEFT WING BOT            (XEBL49)

ALPHA ( 5) =    11.982    BETA  ( 3) =     4.250

 SECTION ( 1)LEFT WING BOT SURF              DEPENDENT VARIABLE CP

2Y/BW          .2990     .3640     .4270     .5340     .6730     .7800     .8870     .9720

  X/CW
      .081                         .4634
      .086              -.0477
      .094    -.1052
      .150                                   .4478     .4620     .4509     .3582
      .157                                                                          -.1765
      .163               .3439
      .177                         .4414
      .229    -.0191
      .246               .3473
      .250                                   .4030     .3975     .3788     .2879
      .274                         .4040
      .345                                                                          -.0853
      .390               .3853
      .400                                   .3371     .3324               .2037
      .422                         .3591
      .503                                                                          -.1007
      .550                                   .2350     .2078
      .565                        -.6831
      .600                                                                 .0284
      .637               .2343
      .650                                                       .0786
      .670                                                                          -.0864
      .700                                             .0290
      .725                                   .0292
      .750                                                       .1646     .0788
      .760                        -.0079
      .775                                   .2895     .1399
      .798               .0281
      .808                         .1563
      .834    -.0018
      .839               .0597
      .850                                  -.0236    -.0575    -.0652
       857                         .0162
      .862                                                                          -.3271
      .865     .0975
      .879              -.0053
      .900     .0230                        -.1673                        -.1886
      .905                        -.1405
      .913              -.1190
      .950                                  -.2350    -.1914    -.2278
      .953                        -.2079
      .955              -.1646
      .965    -.1544
     1.000                        -.2150              -.1680              -.6357
```

```
DATE 10 FEB 76            TABULATED PRESSURE DATA - OA148 ( AMES 11-073-1 )                                    PAGE 2381

                                AMES 11-073(OA148) -140A/B/C/R ORB LEFT WING BOT                (XEBL50)    ( 05 AUG 75  )
               REFERENCE DATA
                                                                                                     PARAMETRIC DATA
SREF   =  2690.0000 SQ.FT.   XMRP  =  1076.6800 IN. XO
LREF   =   474.8000 IN.      YMRP  =      .0000 IN. YO                      RUDDER =   -10.000   SPDBRK =    85.000
BREF   =   936.0680 IN.      ZMRP  =   375.0000 IN. ZO                      BDFLAP =    16.300   L-ELVN =     4.000
SCALE  =      .0300                                                         R-ELVN =     4.000   MACH   =      .900

ALPHA ( 1) =   -4.039    BETA  ( 1) =   -3.850   MACH   =  .89970     Q      =  599.92     P      =  1058.7     RN/L   =  3.5763

 SECTION ( 1)LEFT WING BOT SURF               DEPENDENT VARIABLE CP

2Y/BW        .2990    .3640    .4270    .5340    .6730    .7800    .8870    .9720

  X/CW
   .010     -.1358   -.3052   -.5055  -1.0927  -1.2561  -1.0282  -1.0425
   .020      .0000   -.2578   -.5516  -1.2645  -1.3165  -1.3314  -1.3423  -1.1674
   .040              -.2297   -.6733
   .050     -.1297                    -1.1616  -1.3135  -1.3678  -1.3766
   .069                                                                   -.9699
   .080                               -1.0680
   .081                       -.4840
   .086              -.1197
   .094     -.1193
   .150                                -.6410  -1.1465  -1.2201  -1.2493
   .157                                                                   -.4916
   .163              -.1754
   .177                       -.4753
   .223     -.0534
   .245              -.3185
   .250                                -.4067   -.4770   -.9345  -1.1249
   .274                       -.3736
   .345                                                                   -.5182
   .300              -.3314
   .400                                 .2687   -.2570            -.4193
   .402                       -.2573
   .503                                                                   -.3912
   .550                                -.2966   -.2424
   .565                       -.7622
   .600                                                           -.1816
   .637              -.2847
   .650                                                  -.2059
   .670                                                                   -.2760
   .700                                         -.2405
   .725                                -.2488
   .750                                                  -.1740   -.1443
   .760                       -.2127
   .775                                -.1093   -.1230
   .798              -.1811
   .808                       -.1427
   .834     -.2127
   .839              -.2079
   .850                                -.2176   -.1805   -.2259
```

```
DATE 10 FEB 76              TABULATED PRESSURE DATA - OA148 ( AMES 11-073-1 )

                                 AMES 11-073(OA148) -140A/B/C/R ORB LEFT WING BOT              (XEBL50)

ALPHA ( 1) =    -4.039    BETA  ( 1) =    -3.850

 SECTION ( 1)LEFT WING BOT SURF             DEPENDENT VARIABLE CP

2Y/BW         .2990    .3640    .4270    .5340    .6730    .7800    .8870    .9720

  X/CW
    .857                       -.2228
    .862                                                                    -.1888
    .865     -.1541
    .879              -.2089
    .900     -.1808                     -.1563                     -.1157
    .905                       -.1723
    .919              -.1361
    .950                                -.0296   -.0505   -.0218
    .953                       -.0314
    .955              -.0414
    .965     -.0166
   1.000                        .1021             .0660             .0650
ALPHA ( 1) =    -4.026    BETA  ( 2) =     .188   MACH   =  .89970    Q     =  599.92    P     =  1058.7    RN/L   =  3.5763

 SECTION ( 1)LEFT WING BOT SURF             DEPENDENT VARIABLE CP

2Y/BW         .2990    .3640    .4270    .5340    .6730    .7800    .8870    .9720

  X/CW
    .010     -.0472   -.1239   -.3362  -1.0805  -1.2792  -1.0704  -1.1010
    .020      .0000   -.0986   -.3778  -1.2414  -1.3390  -1.3533  -1.1286   -.6492
    .040              -.0757   -.4772
    .050     -.0607                    -1.1223  -1.2608  -1.2854  -1.1201
    .069                                                                    -.5816
    .080                                -.7345
    .081                       -.3957
    .085              -.0281
    .094     -.0546
    .150                                -.5076   -.6744  -1.0080   -.9241
    .157                                                                    -.3585
    .163              -.0904
    .177                       -.3908
    .229     -.0093
    .246              -.2573
    .250                                -.3619   -.3941   -.6490   -.7793
    .274                       -.3185
    .345                                                                    -.4201
    .390              -.2844
    .400                                -.2581   -.2737            -.5908
    .402                       -.2344
    .503                                                                    -.3655
    .550                                -.3021   -.3065
    .565                       -.7070
    .600                                                           -.3244
```

REPRODUCIBILITY OF THE
ORIGINAL PAGE IS POOR

```
                               AMES 11-073(OA148) -140A/B/C/R ORB LEFT WING BOT                  (XEE1.50)

ALPHA ( 1) =   -4.026    BETA  ( 2) =     .188

 SECTION ( 1)LEFT WING BOT SURF             DEPENDENT VARIABLE CP

2Y/BW       .2990   .3640   .4270   .5340   .6730   .7800   .8870   .9720

  X/CW
   .637             -.2849
   .650                                             -.2982
   .670                                                             -.2666
   .700                                     -.3644
   .725                             -.3607
   .750                                             -.1719  -.2092
   .760                     -.2758
   .775                             -.1041  -.1244
   .799             -.2470
   .808                     -.1520
   .834    -.2743
   .849             -.1925
   .850                             -.2378  -.2160  -.2569
   .857                     -.2288
   .862                                                             -.1644
   .865    -.1579
   .873             -.2140
   .900    -.2004                   -.1672                  -.1105
   .905                     -.1759
   .919             -.1455
   .950                             -.0280  -.0248  -.0435
   .953                     -.0380
   .955             -.0507
   .965    -.0230
  1.000                      .0853           .0869           .0083
ALPHA ( 1) =   -4.037    BETA  ( 3) =    4.267   MACH   =  .89970     Q      =  599.92    P      =  1058.7    RN/L   =  3.5763

 SECTION ( 1)LEFT WING BOT SURF             DEPENDENT VARIABLE CP

2Y/BW       .2990   .3640   .4270   .5340   .6730   .7800   .8870   .9720

  X/CW
   .010     .0058  -.0081  -.1665 -1.0430 -1.2893 -1.0975  -.9289
   .020     .0000   .0051  -.2236 -1.1053 -1.3138 -1.1323  -.8928  -.6066
   .040             .0183  -.3154
   .050    -.0137                   -.7362 -1.2396 -1.1172  -.8885
   .059                                                             -.5603
   .060                             -.5485
   .081                     -.3121
   .085             .0336
   .094    -.0134
   .150                             -.4316  -.5178  -.9159  -.8706
   .157                                                             -.3777
   [illegible]      -.0303
```

AMES 11-073(OA148) -140A/B/C/R ORB LEFT WING BOT (XEBL50)

ALPHA (1) = -4.037 BETA (3) = 4.267

SECTION (1)LEFT WING BOT SURF DEPENDENT VARIABLE CP

2Y/BW	.2590	.3640	.4270	.5340	.6730	.7800	.8870	.9720
X/CW								
.177			-.3176					
.229	.0222							
.246		-.2087						
.250				-.3213	-.3501	-.5799	-.7788	
.274			-.2765					
.345								-.4142
.390		-.2412						
.400				-.2473	-.2627		-.5752	
.402			-.2220					
.503								-.3475
.550				-.3082	-.3543			
.555			-.7578					
.600							-.3139	
.637		-.2804						
.650						-.3266		
.673								-.2336
.700					-.4016			
.725				-.4045				
.750						-.1215	-.1868	
.760			-.3551					
.775				-.1026	-.1351			
.799		-.2625						
.809			-.1907					
.834	-.3216							
.839		-.1946						
.850				-.2559	-.2508	-.3443		
.857			-.2307					
.862								-.1304
.865	-.1833							
.873		-.2203						
.900	-.2095			-.1892			-.1249	
.905			-.1859					
.919		-.1614						
.950				-.0509	-.0477	-.0683		
.953			-.0528					
.955		-.0673						
.965	-.0597							
1.000			.0668		.0850		.0624	

AMES 11-073(OA148) -140A/B/C/R ORB LEFT WING BOT (XE8L50)

ALPHA (2) = .032 BETA (1) = -3.867 MACH = .89853 Q = 599.04 P = 1060.0 RN/L = 3.5758

SECTION (1)LEFT WING BOT SURF DEPENDENT VARIABLE CP

2Y/BW	.2990	.3640	.4275	.5340	.6730	.7800	.8870	.9720
X/CW								
.010	.0353	.0824	.0954	-.6558	-.8312	-.7554	-.6400	
.020	.0000	.0725	-.0151	-.6313	-.7717	-.7623	-.9014	-.3322
.040		.0812	-.1724					
.050	.0020			-.5356	-.5856	-.6799	-.7636	
.063								-.3561
.080				-.3604				
[illegible]			-.2027					
.086		.0907						
.134	-.0106							
[illegible]				-.2212	-.2273	-.2588	-.2717	
.157								-.2549
.163		.0215						
.177			-.1766					
[illegible]	.0253							
.245		-.1342						
[illegible]				-.1544	-.2031	-.2409	-.2662	
[illegible]			-.1265					
.345								-.2778
[illegible]		-.1055						
[illegible]				-.1310	-.1400		-.1989	
[illegible]			-.0894					
[illegible]								-.3415
[illegible]				-.2028	-.2171			
[illegible]			-.8507					
.600							-.3405	
.637		-.1832						
[illegible]						-.3368		
[illegible]								-.2368
[illegible]					-.3545			
[illegible]				-.3495				
.750						-.1604	-.1993	
[illegible]			-.2202					
.775				-.0708	-.1109			
[illegible]		-.1908						
[illegible]			-.1365					
.834	-.1952							
.837		-.2013						
850				-.2345	-.1764	-.2780		
.887			-.2311					
[illegible]								-.1548
[illegible]	-.1264							
[illegible]		-.2284						
[illegible]	-.1312			-.1639			-.1313	
[illegible]			[illegible]					
[illegible]		-.1464						

```
DATE 10 FEB 76            TABULATED PRESSURE DATA - OA148 ( AMES 11-073-1 )                                PAGE 2310

                                  AMES 11-073(OA148) -140A/B/C/R ORB LEFT WING BOT              (XEBL50)

ALPHA ( 2) =      .032    BETA  ( 1) =   -3.867

 SECTION ( 1)LEFT WING BOT SURF                DEPENDENT VARIABLE CP

2Y/BW        .2990     .3640     .4270     .5340     .6730     .7800     .8870     .9720

  X/CW
    .950                                  -.0183    -.0646     .0066
    .953                        -.0175
    .955              -.0389
    .965    -.0146
   1.000                         .1162               .0785               .1174
ALPHA ( 2) =      .035    BETA  ( 2) =      .184   MACH   =  .89853     Q     =  599.04     P     =  1060.0     RN/L   =  3.5758

 SECTION ( 1)LEFT WING BOT SURF                DEPENDENT VARIABLE CP

2Y/BW        .2990     .3640     .4270     .5340     .6730     .7800     .8870     .9720

  X/CW
    .010     .0262     .1052     .1737    -.4756    -.6621    -.7171    -.6239
    .020     .0000     .1043     .0907    -.4747    -.5967    - 6342    -.7900    -.3351
    .040               .1173    -.0666
    .050     .0220                        -.3642    -.4756    -.5524    -.6915
    .069                                                                          -.3276
    .080                                  -.2858
    .081                        -.1319
    .086               .1241
    .094     .0116
    .150                                  -.1813    -.2048    -.2344    -.3228
    .157                                                                          -.2653
    .163               .0710
    .177                        -.1475
    .220     .0399
    .246              -.0968
    .250                                  -.1447    -.1866    -.2247    -.2683
    .274                        -.1154
    .345                                                                          -.3152
    .390              -.0939
    .400                                  -.1368    -.1517              -.2169
    .402                        -.0960
    .503                                                                          -.3591
    .550                                  -.2103    -.2236
    .565                        -.8751
    .600                                                                -.3710
    .637              -.1995
    .650                                                      -.3551
    .670                                                                          -.2332
    .700                                            -.3872
    .725                                  -.3610
    .750                                                      -.1476    -.1981
    .760                        -.2859
```

```
                                   AMES 11-073(OA148) -140A/B/C/R ORB LEFT WING BOT                (XE8L50)

ALPHA ( 2) =      .035     BETA  ( 2) =      .184

 SECTION ( 1)LEFT WING BOT SURF                DEPENDENT VARIABLE CP

2Y/BW         .2990    .3640    .4270    .5340    .6730    .7800    .8870    .9720

  X/CW
    .775                                -.0884   -.1053
    .798                -.2209
    .808                         -.1482
    .834    -.2386
    .838                -.2040
    .850                                -.2573   -.1949   -.2872
    .857                         -.2618
    .862                                                                    -.1240
    .865    -.1472
    .879                -.2515
    .900    -.2219                      -.1753                     -.1219
    .904                         -.2000
    .919                -.1721
    .950                                -.0275   -.0577    .0045
    .953                         -.0461
    .965                -.0836
    .985    -.0404
   1.000                          .0914             .0885              .1312

ALPHA ( 2) =      .028     BETA  ( 3) =     4.248   MACH   =   .89853     Q      =  599.04     P      =  1060.0     RN/L   =  3.5758

 SECTION ( 1)LEFT WING BOT SURF                DEPENDENT VARIABLE CP

2Y/BW         .2990    .3640    .4270    .5340    .6730    .7800    .8870    .9720

  X/CW
    .010    -.0098     .0230    .2269   -.3030   -.5129   -.5685   -.5503
    .020     .0000     .1042    .1657   -.3589   -.4182   -.4961   -.6190   -.2927
    .040               .1212    .0164
    .050     .0061                      -.2472   -.3585   -.4139   -.4906
    .069                                                                    -.3258
    .070                                -.2113
    .081                         -.0686
    .088               .1437
    .094     .0149
    .150                                -.1544   -.1783   -.2095   -.3114
    .157                                                                    -.2735
    .163               .1065
    .177                         -.1029
    .223     .0484
    .246              -.0562
    .250                                -.1246   -.1681   -.2088   -.2624
    .274                         -.0941
    .314                                                                    -.3230
    .330              -.0718
```

AMES 11-073(OA148) -140A/B/C/R ORB LEFT WING BOT (XEBL50)

ALPHA (2) = .028 BETA (3) = 4.248

SECTION (1)LEFT WING BOT SURF DEPENDENT VARIABLE CP

2Y/BW	.2990	.3640	.4270	.5340	.6730	.7800	.8870	.9720
X/CW								
.400				-.1305	-.1523		-.2205	
.402			-.0896					
.503								-.4172
.550				-.2161	-.2414			
.565			-.8617					
.600							-.4036	
.637		-.1887						
.650						-.3733		
.670								-.2496
.700					-.4130			
.725				-.3637				
.750						-.1398	-.1952	
.760			-.2998					
775				-.0915	-.1488			
.796		-.2590						
.809			-.1620					
.834	-.2601							
.933		-.2220						
.850				-.3248	-.2716	-.3681		
.857			-.2892					
.862								-.1226
.865	-.1765							
.873		-.2789						
.900	-.2474			-.2211			-.1413	
.905			-.2322					
.919		-.2095						
.940				-.0619	-.0443	-.0275		
.943			-.0828					
.955		-.0977						
.965	-.0730							
1.000			.0581		.0788		.1262	

ALPHA (3) = 3.999 BETA (1) = -3.868 MACH = .90073 Q = 600.62 P = 1057.6 RN/L = 3.5790

SECTION (1)LEFT WING BOT SURF DEPENDENT VARIABLE CP

2Y/BW	.2990	.3640	.4270	.5340	.6730	.7800	.8870	.9720
X/CW								
.010	.0198	.1210	.3952	.1027	.0284	.1198	.1340	
.020	.0000	.1668	.3366	-.0233	.0115	-.0028	-.0164	-.1041
.040		.1946	.1657					
.050	.0578			-.0377	-.0498	-.0354	-.0543	
.069								-.1596
.080				-.0360				

```
                           AMES 11-073(OA148) -140A/B/C/R ORB LEFT WING BOT              (XE8L50)

ALPHA ( 3) =     3.999    BETA  ( 1) =   -3.868

 SECTION ( 1)LEFT WING BOT SURF           DEPENDENT VARIABLE CP

2Y/BW        .2990   .3640   .4270   .5340   .6730   .7800   .8870   .9720

  X/CW
    .081                     .0610
    .085             .2284
    .094     .0587
    .150                             .0009  -.0051  -.0137  -.0710
    .157                                                            -.1956
    .163             .1932
    .177                     .0191
    .229     .0991
    .246             .0350
    .250                             .0025  -.0197  -.0451  -.0911
    .274                     .0213
    .345                                                            -.2242
    .390             .0306
    .400                            -.0174  -.0256          -.1162
    .402                     .0227
    .523                                                            -.3008
    .550                            -.1145  -.1405
    .565                    -.9040
    .600                                                    -.2988
    .637            -.1087
    .650                                            -.2775
    .670                                                            -.2451
    .700                                    -.2896
    .725                            -.2170
    .750                                            -.0966  -.1462
    .760                    -.1700
    .775                            -.0249  -.0701
    .798            -.1367
    .808                    -.1310
    .834    -.1697
    .839            -.2131
    .850                            -.3237  -.3213  -.3996
    .857                    -.2965
    .862                                                            -.3980
    .865    -.1256
    .879            -.2863
    .900    -.2123                  -.2324                  -.4775
    .905                    -.2151
    .919            -.1673
    .940                            -.0481  -.1058  -.3304
    .948                    -.0364
    .950            -.0499
    .965    -.0261
   1.000                     .1229           .0890          -.1027
```

DATE 10 FEB 76 TABULATED PRESSURE DATA - OA148 (AMES 11-073-1)

AMES 11-073(OA148) -140A/B/C/R ORB LEFT WING BOT (XEBL50)

ALPHA (3) = 4.003 BETA (2) = .184 MACH = .90073 Q = 600.62 P = 1057.6 RN/L = 3.5750

SECTION (1)LEFT WING BOT SURF DEPENDENT VARIABLE CP

2Y/BW	.2990	.3640	.4270	.5340	.6730	.7800	.8870	.9720
X/CW								
.010	-.0793	-.0069	.3640	.1780	.0893	.1551	.1497	
.020	.0000	.0908	.3422	.0603	.0545	.0425	.0170	-.2125
.040		.1352	.2098					
.050	.0187			.0291	-.0073	-.0200	-.0367	
.059								-.2373
.080				.0091				
.081			.0971					
.086		.2116						
.094	.0395							
.150				.0174	.0034	-.0080	-.0857	
.157								-.2288
.163		.2076						
.177			.0446					
[illegible]	.0892							
.246		.0566						
.250				.0[illegible]	-.0257	-.0493	-.1185	
.274			.0294					
.345								-.2805
.390		.0379						
.400				-.0239	-.0320		-.1374	
.402			.0141					
.503								-.3597
.550				-.1245	-.1467			
.565			-.9238					
.600							-.3216	
.637		-.1166						
.650						-.2959		
.670								-.2658
.700					-.2914			
.725				-.2621				
.750						-.1026	-.1721	
.760			-.1881					
.775				-.0259	-.0832			
.798		-.1590						
.808			-.1342					
.834	-.1820							
.839		-.2091						
.850				-.3198	-.3185	-.3981		
.857			-.2989					
.862								-.4158
.865	-.1326							
.879		-.2865						
.900	-.2267			-.2734			-.4883	
.905			-.2346					
.919		-.1902						

REPRODUCIBILITY OF THE
ORIGINAL PAGE IS POOR

```
                                   AMES 11-073(OA148) -140A/B/C/R ORB LEFT WING BOT          (XEBL50)

ALPHA ( 3) =    4.003    BETA  ( 2) =     .184

 SECTION ( 1)LEFT WING BOT SURF              DEPENDENT VARIABLE CP

2Y/BW       .2990   .3640   .4270   .5340   .6730   .7800   .8870   .9720

  X/CW
    .950                            -.0580  -.0646  -.1460
    .953                    -.0604
    .955            -.0695
    .965   -.0483
   1.000                     .0978           .1029          -.0680
ALPHA ( 3) =    4.045    BETA  ( 3) =    4.239   MACH   =  .90073     Q     =  600.62     P     =  1057.6     RN/L   =  3.5790

 SECTION ( 1)LEFT WING BOT SURF              DEPENDENT VARIABLE CP

2Y/BW       .2990   .3640   .4270   .5340   .6730   .7860   .8870   .9720

  X/CW
    .010   -.2196  -.1597   .2898   .2485   .1560   .1986   .1955
    .020    .0000  -.0164   .3173   .1377   .1052           .0662  -.3620
    .040            .0331   .2317
    .050   -.0379                   .0883   .0260   .0231  -.0036
    .059                                                           -.3199
    .080                            .0530
    .081                    .1252
    .086            .1664
    .094    .0058
    .150                            .0375   .0158   .0002  -.0821
    .157                                                           -.2719
    .163            .2095
    .177                    .0624
    .229    .0687
    .246            .0629
    .250                            .0121  -.0140  -.0343  -.1202
    .274                    .0353
    .345                                                           -.3287
    .370            .0404
    .400                           -.0276  -.0360          -.1536
    .402                    .0099
    .503                                                           -.3803
    .550                           -.1261  -.1411
    .575                   -.9493
    .600                                                   -.3102
    .637           -.1133
    .650                                           -.2838
    .670                                                           -.3098
    .700                                   -.2809
    .725                           -.2370
    .750                                           -.1220  -.2078
    .760                   -.2154
```

```
                         AMES 11-073(OA148) -140A/B/C/R ORB LEFT WING BOT              (XEBL50)

ALPHA ( 3) =    4.005    BETA  ( 3) =    4.239

 SECTION ( 1)LEFT WING BOT SURF              DEPENDENT VARIABLE CP

2Y/BW       .2390   .3540   .4270   .5340   .6730   .7900   .8870   .9720

  X/CW
   .775                             -.0219  -.0989
   .798             -.1743
   .800                     -.1504
   .834    -.1550
   .834             -.2120
   .850                             -.3182  -.2939  -.4037
   .857                     -.3005
   .862                                                             -.3613
   .875    -.1490
[illegible]         -.2850
   .900    -.2450                   -.2905                  -.5097
   .905                     -.3295
   .913             -.2364
   .950                             -.1022  -.0855  -.0930
   .963                     -.1037
   .975             -.1066
   .985     .0828
  1.000                      .0628           .0532          -.0159
ALPHA ( 4) =    8.040    BETA  ( 1) =    -3.870   MACH   =  .89937    Q    =  599.61    P    =  1059.0    RN/L   =  3.5771
 SECTION ( 1)LEFT WING BOT SURF              DEPENDENT VARIABLE CP

2Y/BW       .2990   .3540   .4270   .5340   .6730   .7800   .8870   .9720

  X/CW
   .010    -.1799  -.1954   .4036   .5053   .4578   .5098   .4724
   .020     .0000   .0418   .4626   .3863   .3922   .3919   .3680  -.2878
   .040             .1132   .3837
   .050     .0409                   .2798   .2704   .2710   .2545
   .069                                                            -.2050
   .060                             .2272
   .081                     2663
   .083             .2819
   .094     .0772
   .150                             .1929   .1909   .1878   .1095
   .157                                                            -.2050
   .163             .3275
   .177                     .1919
   .229     .1512
   .246             .1839
   .250                             .1519   .1342   .1150   .0387
   .274                     .1595
   .345                                                            -.1956
   .390             .1510
```

```
                         AMES 11-073(OA148) -140A/B/C/R ORB LEFT WING BOT              (XEBL50)

ALPHA ( 4) =    8.040    BETA  ( 1) =    -3.870

 SECTION ( 1)LEFT WING BOT SURF              DEPENDENT VARIABLE CP

2Y/BW       .2990   .3640   .4270   .5340   .6730   .7800   .8870   .9720

  X/CW
     .400                            .0902   .0826           -.0211
     .402                    .1247
     .503                                                            -.2198
     .550                           -.0244  -.0446
     .565                   -.6316
     .600                                                    -.1851
     .637           -.0243
     .650                                           -.1725
     .670                                                            -.2539
     .700                                   -.2229
     .725                           -.1706
     .750                                           -.0816  -.1437
     .760                   -.1547
     .775                            .0255  -.0801
     .799           -.1107
     .808                   -.0998
     .834   -.1558
     .839           -.2051
     .850                           -.3077  -.3438  -.3819
     .857                   -.2916
     .862                                                            -.4209
     .865   -.1049
     .879           -.2988
     .900   -.2381                  -.4694                   -.4584
     .905                   -.4514
     .919           -.3144
     .940                           -.1601  -.4259  -.5450
     .953                   -.0939
     .955           -.0944
     .965   -.0631
    1.000                    .0958           -.0635           -.3701

ALPHA ( 4) =    8.045    BETA  ( 2) =     .178   MACH  =  .89937    Q    =  599.61    P    =  1059.0    RN/L  =  3.5771

 SECTION ( 1)LEFT WING BOT SURF              DEPENDENT VARIABLE CP

2Y/BW       .2990   .3640   .4270   .5340   .6730   .7800   .8870   .9720

  X/CW
     .010   -.3620  -.3762   .2662   .4937   .4360   .4655   .4153
     .020    .0000  -.0949   .3806   .3938   .3805   .3735   .3351  -.4419
     .040           -.0046   .3643
     .050   -.0363                   .2957   .2741   .2614   .2344
     .063                                                            -.3090
     .080                            .2400
```

AMES 11-073(OA148) -140A/B/C/R ORB LEFT WING BOT (XEBL50)

ALPHA (4) = 8.045 BETA (2) = .178

SECTION (1)LEFT WING BOT SURF DEPENDENT VARIABLE CP

2Y/BW	.2990	.3640	.4270	.5340	.6730	.7800	.8870	.9720
X/CW								
.081			.2700					
.085		.2192						
.094	.0292							
.150				.1875	.1811	.1724	.0836	
.157								-.2216
.163		.3156						
.177			.1944					
.223	.1250							
.245		.1847						
.250				.1433	.1299	.1042	.0144	
.274			.1585					
.345								-.1926
.370		.1503						
.400				0830	.0730		-.0451	
.482			.1193					
.503								-.2228
.550				-.0329	-.0566			
.555			-.6419					
.600							-.1983	
.637		-.0239						
.650						-.1849		
.670								-.2994
.700					-.2259			
.725				-.1701				
.750						-.0870	-.1610	
.760			-.1453					
.775				.0189	-.0975			
.798		-.1161						
.808			-.1026					
.834	-.1575							
.839		-.1934						
.850				-.3167	-.3477	-.3841		
.857			-.2795					
.862								-.4970
.865	-.1103							
.879		-.2911						
.900	-.2295			-.4657			-.4856	
.905			-.4354					
.919		-.3433						
.950				-.1476	-.4126	-.5413		
.953			-.1056					
.955		-.1181						
.965	-.0732							
1.000			.0779		-.0198		-.4431	

AMES 11-073(OA148) -140A/B/C/R ORB LEFT WING BOT (XEBL50)

ALPHA (4) = 8.043 BETA (3) = 4.236 MACH = .89937 Q = 593.61 P = 1059.0 RN/L = 3.5771

SECTION (1)LEFT WING BOT SURF DEPENDENT VARIABLE CP

2Y/BW	.2990	.3640	.4270	.5340	.6730	.7800	.8870	.9720
X/CW								
.010	-.5263	-.3380	.0895	.4458	.4004	.3992	.3511	
.020	.0000	-.1679	.2561	.3835	.3543	.3523	.3058	-.5433
.040		-.0938	.3144					
.050	-.1184			.2910	.2594	.2538	.2194	
.069								-.4115
.080				.2308				
.081			.2572					
.085		.1469						
.094	-.0341							
.150				.1800	.1848	.1601	.0755	
.157								-.2649
.163		.2792						
.177			.1927					
.229	.0876							
.245		.1686						
.250				.1383	.1226	.0940	.0039	
.274			.1511					
.345								-.2542
.350		.1497						
.400				.0720	.0595		-.0681	
.402			.1039					
.503								-.2656
.550				-.0307	-.0669			
.575			-.7019					
.600							-.2264	
.637		-.0256						
.650						-.1987		
.670								-.3327
.700					-.2239			
.705				-.1537				
.740						-.1015	-.1947	
.760			-.1591					
.775				-.0023	-.1217			
.798		-.1174						
.808			-.1123					
.834	-.1576							
.837		-.1036						
.850				-.3314	-.3546	-.3937		
.857			-.2777					
.862								-.5478
.865	-.1151							
.879		-.2866						
.900	-.2353			-.4601			-.5010	
.905			-.4150					
.919		-.3350						

```
DATE 10 FEB 76            TABULATED PRESSURE DATA - OA148 ( AMES 11-073-1 )                                    PAGE 2395

                                 AMES 11-073(OA148) -140A/B/C/R ORB LEFT WING BOT              (XE8L50)

ALPHA ( 4) =    8.043    BETA  ( 3) =    4.236

 SECTION ( 1)LEFT WING BOT SURF            DEPENDENT VARIABLE CP

2Y/BW        .2990   .3540   .4270   .5340   .6730   .7800   .8870   .9720

  X/CW
    .950                             -.1599  -.2932  -.5353
    .963                     -.1405
    .985             -.1457
    .995    -.1134
   1.000                      .0410          -.0022          -.4911

ALPHA ( 3) =   11.930    BETA  ( 1) =   -3.854   MACH  =  .89310    Q    =  599.28    P    =  1059.0    RN/L  =  3.5742

 SECTION ( 1)LEFT WING BOT SURF            DEPENDENT VARIABLE CP

2Y/BW        .2990   .3540   .4270   .5340   .6730   .7800   .8870   .9720

  X/CW
    .010    -.4795  -.5504   .2046   .5289   .6068   .5853   .5278
    .020     .0000  -.1408   .4144   .5733   .5661   .5617   .5065  -.3897
    .040            -.0289   .4860
    .050    -.0165                   .4747   .4644   .4576   .4215
    .059                                                             -.2238
    .060                             .4077
    .081                     .4082
    .105             .2785
    .134     .0342
    .150                             .3378   .3450   .3325   .2539
    .157                                                             -.1905
    .163             .4163
    .177                     .3237
    .229     .2082
    .246             .3019
    .250                             .2701   .2673   .2463   .1655
    .274                     .2724
    .345                                                             -.1075
    .390             .2589
    .400                             .1901   .1839           .0800
    .402                     .2204
    .503                                                             -.1595
    .550                             .0696   .0450
    .565                    -.5950
    .600                                                     -.0940
    .637             .0645
    .650                                            -.0843
    .670                                                             -.2440
    .700                                    -.1500
    .725                            -.1020
    .750                                            -.0467  -.1054
    .760                    -.1141
```

```
                        AMES 11-073(OA148) -140A/B/C/R ORB LEFT WING BOT            (XE8L50)

ALPHA ( 5) =   11.980    BETA  ( 1) =   -3.854

 SECTION ( 1)LEFT WING BOT SURF              DEPENDENT VARIABLE CP

2Y/BW       .2990   .3640   .4270   .5340   .6730   .7800   .8870   .9720

  X/CW
   .775                              .0855  -.0603
   .798             -.0790
   .808                     -.0500
   .834    -.1266
   .839             -.1674
   .850                            -.2759  -.3248  -.3473
   .857                     -.2509
   .862                                                             -.4575
   .865    -.0756
   .879             -.2670
   .900    -.2272                  -.4342                  -.4228
   .905                     -.4208
   .913             -.3930
   .950                            -.5178  -.4238  -.5039
   .953                     -.4081
   .955             -.2167
   .965    -.1389
  1.000                     -.0176          -.3253          -.5486
ALPHA ( 5) =   11.999    BETA  ( 2) =     .180   MACH   =  .89910    Q     =  599.28    P     =  1059.0    RN/L  =  3.5742
 SECTION ( 1)LEFT WING BOT SURF              DEPENDENT VARIABLE CP

2Y/BW       .2990   .3640   .4270   .5340   .6730   .7800   .8870   .9720

  X/CW
   .010    -.6899  -.4112  -.0067   .5440   .5244   .4748   .4147
   .020     .0000  -.2125   .2537   .5290   .5124   .4943   .4307  -.5625
   .040            -.1139   .4086
   .050    -.1203                   .4556   .4472   .4173   .3688
   .069                                                             -.3744
   .080                             .3906
   .081                     .3783
   .086             .1896
   .094     .0093
   .150                             .3210   .3246   .3077   .2079
   .157                                                             -.2567
   .163             .3715
   .177                     .3123
   .229     .1624
   .245             .2778
   .250                             .2593   .2421   .2206   .1295
   .274                     .2658
   .345                                                             -.1777
   .390             .2502
```

```
                                    AMES 11-073(OA148) -140A/B/C/R ORB LEFT WING BO                (XE8L50)

ALPHA ( 5) =    11.989    BETA  ( 2) =      .180

 SECTION ( 1)LEFT WING BOT SURF              DEPENDENT VARIABLE CP

2Y/BW        .2990   .3640   .4270   .5340   .6730   .7800   .8870   .9720

  X/CW
    .400                             .1769   .1632           .0373
    .402                     .2071
    .503                                                             -.2321
    .550                             .0547   .[illegible]273
    .565                    -.6016
    .600                                                    -.1310
    .637             .0546
    .650                                             -.1045
    .670                                                             -.2984
    .700
    .725
    .740                                             -.0630  -.1371
    .760                    -.1226
    .775
    .798            -.0873
    .806                    -.0617
    .934    -.1287
    .939            -.1599
    .850                            -[illegible]  -.3334  -.3565
    .857                    -.2472
    .862                                                             -.5124
    .965    -.0736
    .879            -.2636
    .900    -.2267                  -.4356                  -.4521
    .905                    -.4191
    .918            -.3965
    .950                            -.5203  -.4400  -.5085
    .953                    -.3893
    .955            -.2654
    .965    -.1793
   1.000                    -.0602          -.2809          -.5769

ALPHA ( 5) =    11.979    BETA  ( 3) =    4.260    MACH   =  .89910      Q      =  599.28      P      =  1059.0      RN/L   =  3.5742

 SECTION ( 1)LEFT WING BOT SURF              DEPENDENT VARIABLE CP

2Y/BW        .2990   .3640   .4270   .5340   .6730   .7800   .8870   .9720

  X/CW
    .010    -.7892  -.3851  -.2225   .4375   .4259   .3461   .2873
    .020     .0000  -.3107   .0987   .4541   .4480   .4245   .3468  -.7292
    .040            -.2236   .3201
    .050    -.2029                   .4102   .4071   .3782   .3200
    .069                                                             -.4921
    .080                             .3545
```

C-7

```
                                  AMES 11-073(OA148) -140A/B/C/R ORB LEFT WING BOT              (XEBL50)
ALPHA ( 5) =   11.979    BETA  ( 3) =    4.260
 SECTION ( 1)LEFT WING BOT SURF              DEPENDENT VARIABLE CP

2Y/BW        .2990   .3640   .4270   .5340   .6730   .7800   .8870   .9720

 X/CW
   .081                      .3327
   .086              .1004
   .094     -.0674
   .150                              .2899   .3013   .2869   .1819
   .157                                                              -.3142
   .163              .3078
   .177                      .2896
   .229      .1076
   .246              .2395
   .250                              .2357   .2286   .2026   .1086
   .274                      .2449
   .345                                                              -.2421
   .390              .2336
   .400                              .1566   .1538           .0175
   .402                      .1922
   .503                                                              -.2587
   .550                              .0510   .0172
   .565                     -.6012
   .600                                                     -.1495
   .637              .0447
   .650                                             -.1222
   .670                                                              -.3311
   .700                                     -.1631
   .725                             -.1032
   .750                                             -.0809  -.1743
   .760                     -.1326
   .775                              .0554  -.1079
   .798             -.0881
   .808                     -.0746
   .834     -.1376
   .840             -.1582
   .850                             -.2947  -.3420  -.3650
   .857                     -.2556
   .862                                                              -.5558
   .865     -.0732
   .879             -.2576
   .900     -.2213                  -.4304                  -.4723
   .905                     -.4160
   .919             -.3533
   .950                             -.5039  -.4302  -.5067
   .953                     -.3623
   .955             -.2550
   .965     -.1943
  1.000                     -.0867          -.2094          -.6200
```

```
DATE 10 FEB 76               TABULATED PRESSURE DATA - OA148 ( AMES 11-073-1 )                                              PAGE 2400

                                           AMES 11-073(OA148) -140A/B/C/R ORB LEFT WING BOT                    (XEBL51)   ( 05 AUG 75  )

              REFERENCE DATA                                                                                   PARAMETRIC DATA

SREF   =  2690.0000 SQ.FT.    XMRP   =  1076.6800 IN. XO                                      RUDDER =   -10.000   SPDBRK =    85.000
LREF   =   474.8000 IN.       YMRP   =      .0000 IN. YO                                      BDFLAP =    16.300   L-ELVN =     4.000
BREF   =   936.0680 IN.       ZMRP   =   375.0000 IN. ZO                                      R-ELVN =     4.000   MACH   =      .600
SCALE  =      .0300

ALPHA ( 1) =    -3.976    BETA  ( 1) =    -7.854   MACH   =  .59542     Q      =  592.57     P      =  2387.9     RN/L   =  4.8104

 SECTION ( 1)LEFT WING BOT SURF                DEPENDENT VARIABLE CP

2Y/BW         .2990    .3640    .4270    .5340    .6730    .7800    .8870    .9720

  X/CW
    .010     -.2940   -.6608  -1.0695  -2.1463  -2.1201  -1.7637  -1.7633
    .020      .0000   -.5605  -1.1164  -1.9868  -1.9837  -1.4293  -1.7887   -.9127
    .040              -.5266   -.9761
    .050     -.2418                     -.9394  -1.0015  -1.1207  -1.0990
    .069                                                                    -.7860
    .080                                 -.6982
    .081                        -.6092
    .086              -.3370
    .094     -.2230
    .150                                 -.4329   -.4680   -.5154   -.4858
    .157                                                                    -.3317
    .163              -.3669
    .177                        -.3798
    .229     -.1789
    .246              -.3643
    .250                                 -.2907   -.3236   -.3519   -.3398
    .274                        -.2641
    .345                                                                    -.3058
    .390              -.2306
    .400                                 -.2013   -.2041            -.2309
    .402                        -.1759
    .503                                                                    -.2868
    .550                                 -.1940   -.1972
    .565                        -.2191
    .600                                                            -.2142
    .637              -.1960
    .650                                                   -.1891
    .670                                                                    -.2589
    .700                                          -.1832
    .725                                 -.1541
    .750                                                   -.1665   -.1877
    .760                        -.1583
    .775                                 -.1376   -.1174
    .798              -.1290
    .808                        -.1549
    .834     -.1554
    .847              -.2016
    .850                                 -.1799   -.1416   -.1789
```

```
                                      AMES 11-073(OA148) -140A/B/C/R ORB LEFT WING BOT              (XEBL51)

ALPHA ( 1) =   -3.976    BETA  ( 1) =   -7.854

 SECTION ( 1)LEFT WING BOT SURF             DEPENDENT VARIABLE CP

2Y/BW        .2990   .3640   .4270   .5340   .6730   .7800   .8870   .9720

  X/CW
    .857                     -.1735
    .862                                                             -.1971
    .865    -.1589
    .879            -.1810
    .900    -.1513                   -.1510                  -.1248
    .905                     -.1566
    .919            -.1448
    .950                             -.0604  -.0826  -.0468
    .953                     -.0631
    .955            -.0782
    .965    -.0427
   1.000                      .0496           -.0045           .0498
ALPHA ( 1) =   -3.959    BETA  ( 2) =   -3.844   MACH   =  .59542     Q      =  592.57     P      =  2387.9     RN/L   =  4.8104

 SECTION ( 1)LEFT WING BOT SURF             DEPENDENT VARIABLE CP

2Y/BW        .2990   .3640   .4270   .5340   .6730   .7800   .8870   .9720

  X/CW
    .010    -.1892  -.4287  -.7867 -2.0291 -2.1032 -1.9575 -1.9411
    .020     .0000  -.3675  -.8656 -1.7128 -1.8544 -1.5526 -1.8213  -.8131
    .040            -.3445  -.7544
    .050    -.1673                   -.8608  -.9206 -1.0223 -1.0085
    .069                                                             -.6677
    .080                             -.6445
    .081                     -.5134
    .085            -.2286
    .094    -.1497
    .150                             -.3957  -.4239  -.4670  -.4473
    .157                                                             -.3031
    .163            -.2723
    .177                     -.3295
    .229    -.1187
    .246            -.3136
    .250                             -.2626  -.3122  -.3263  -.3164
    .274                     -.2409
    .345                                                             -.2755
    .393            -.2044
    .400                             -.1890  -.2024          -.2192
    .402                     -.1643
    .503                                                             -.2571
    .550                             -.1896  -.1946
    .555                     -.1896
    .600                                                     -.2045
```

```
                                AMES 11-073(OA148) -140A/B/C/R ORB LEFT WING BOT                    (XE8L51)
ALPHA ( 1) =   -3.959   BETA  ( 2) =   -3.844
 SECTION ( 1)LEFT WING BOT SURF                DEPENDENT VARIABLE CP

2Y/BW        .2990   .3640   .4270   .5340   .6730   .7800   .8870   .9720

 X/CW
   .637              -.1859
   .650                                              -.1880
   .670                                                              -.2352
   .700                                      -.1903
   .725                              -.1612
   .750                                              -.1751  -.1816
   .760                      -.1621
   .775                              -.1378  -.1222
   .798              -.1282
   .808                      -.1500
   .834      -.1514
   .839              -.2022
   .850                              -.1815  -.1409  -.1804
   .857                      -.1784
   .862                                                              -.1762
   .865      -.1502
   .879              -.1806
   .900      -.1511                  -.1590                  -.1251
   .905                      -.1621
   .919              -.1465
   .950                              -.0658  -.0772  -.0520
   .953                      -.0647
   .955              -.0815
   .965      -.0543
  1.000                       .0583           .0195           .0515
ALPHA ( 1) =   -3.956   BETA  ( 3) =    .188   MACH   =  .59542    Q     =  592.57    P     =  2387.9    RN/L   =  4.8104
 SECTION ( 1)LEFT WING BOT SURF                DEPENDENT VARIABLE CP

2Y/BW        .2990   .3640   .4270   .5340   .6730   .7800   .8873   .9720

 X/CW
   .010      -.0951  -.2306  -.5466 -1.7378 -1.8686 -2.1807 -1.9517
   .020       .0000  -.2067  -.6095 -1.3336 -1.4843 -1.6075 -1.7922  -.7165
   .040              -.1700  -.5578
   .050      -.0973                  -.7453  -.8284  -.8997  -.9256
   .069                                                              -.5402
   .080                              -.5684
   .081                      -.4264
   .086              -.1227
   .094      -.0958
   .150                              -.3561  -.3950  -.4172  -.4170
   .157                                                              -.2817
   .163              -.1861
```

AMES 11-073(OA148) -140A/B/C/R ORB LEFT WING BOT (XE8L51)

ALPHA (1) = -3.956 BETA (3) = .188

SECTION (1)LEFT WING BOT SURF DEPENDENT VARIABLE CP

2Y/BW	.2990	.3640	.4270	.5340	.6730	.7800	.8870	.9720
X/CW								
.177			-.2955					
.229	-.0692							
.246		-.2599						
.250				-.2457	-.2912	-.3008	-.2990	
.274			-.2217					
.345								-.2352
.390		-.1816						
.400				-.1778	-.1902		-.2038	
.402			-.1586					
.503								-.2390
.550				-.1856	-.1918			
.565			-.1869					
.600							-.2000	
.637		-.1804						
.650						-.1879		
.670								-.2146
.700					-.1944			
.725				-.1675				
.750						-.1666	-.1737	
.760			-.1633					
.775				-.1335	-.1236			
.798		-.1320						
.808			-.1450					
.834	-.1557							
.839		-.1973						
.850				-.1878	-.1496	-.1874		
.857			-.1814					
.862								-.1426
.865	-.1495							
.879		-.1836						
.900	-.1580			-.1652			-.1234	
.905			-.1621					
.919		-.1527						
.950				-.0735	-.0654	-.0532		
.953			-.0717					
.955		-.0894						
.965	-.0663							
1.000			.0500		.0389		.0520	

AMES 11-073(OA148) -140A/B/C/R ORB LEFT WING BOT (XEBL51)

ALPHA (1) = -3.963 BETA (4) = 4.269 MACH = .59542 Q = 592.57 P = 2387.9 RN/L = 4.8104

SECTION (1)LEFT WING BOT SURF DEPENDENT VARIABLE CP

2Y/BW	.2990	.3640	.4270	.5340	.6730	.7800	.8870	.9720
X/CW								
.010	-.0416	-.0869	-.3359	-1.3748	-1.5214	-1.9052	-1.7278	
.020	.0000	-.0774	-.3957	-1.0964	-1.2299	-1.2963	-1.5585	-.5386
.040		-.0668	-.4126					
.050	-.0500			-.6357	-.7054	-.7873	-.8047	
.063								-.3962
.080				-.4791				
.081			-.3359					
.085		-.0460						
.094	-.0530							
.150				-.3082	-.3447	-.3594	-.3794	
.157								-.2448
.163		-.1184						
.177			-.2474					
.229	-.0373							
.246		-.2126						
.250				-.2235	-.2564	-.2736	-.2699	
.274			-.1954					
.345								-.1999
.390		-.1591						
.400				-.1670	-.1714		-.1813	
.402			-.1490					
.503								-.1956
.550				-.1773	[illegible]			
.565			-.1871					
.600							-.1815	
.637		-.1745						
.650						-.1734		
.670								-.1791
.700					-.1874			
.725				-.1602				
.750						-.1614	-.1578	
.760			-.1626					
.775				-.1243	-.1192			
.788		-.1334						
.808			-.1428					
.834	-.1554							
.839		-.1804						
.850				-.1835	-.1526	-.1853		
.857			-.1785					
.862								-.1119
.865	-.1518							
.879		-.1790						
.900	-.1564			-.1573			-.1168	
.905			-.1616					
.919		-.1473						

REPRODUCIBILITY OF THE
ORIGINAL PAGE IS POOR

```
                                AMES 11-073(OA148) -140A/B/C/R ORB LEFT WING BOT            (XEBL51)

ALPHA ( 1) =   -3.963    BETA  ( 4) =    4.269

 SECTION ( 1)LEFT WING BOT SURF            DEPENDENT VARIABLE CP

2Y/BW        .2990   .3640   .4270   .5340   .6730   .7800   .8870   .9720

  X/CW
    .950                             -.0689  -.0464  -.0487
    .953                     -.0755
    .955             -.0885
    .965     -.0736
   1.000                      .0453           .0513           .0710

ALPHA ( 1) =   -3.980    BETA  ( 5) =    8.339   MACH   =  .59542    Q     =  592.57    P     =  2387.9    RN/L   =  4.8104

 SECTION ( 1)LEFT WING BOT SURF            DEPENDENT VARIABLE CP

2Y/BW        .2990   .3640   .4270   .5340   .6730   .7800   .8870   .9720

  X/CW
    .010     -.0192   .0144  -.1181 -1.0127 -1.2101 -1.5367 -1.4338
    .020      .0000   .0104  -.1728  -.8311  -.9152 -1.0508 -1.2877  -.4195
    .040              .0276  -.2501
    .050     -.0299                  -.4836  -.5828  -.6685  -.7157
    .060                                                             -.3208
    .080                             -.3887
    .081                     -.2394
    .086              .0210
    .094     -.0315
    .150                             -.2580  -.2900  -.3191  -.3406
    .157                                                             -.2249
    .163             -.0478
    .177                     -.1949
    .229     -.0130
    .246             -.1617
    .250                             -.1909  -.2275  -.2408  -.2370
    .274                     -.1619
    .345                                                             -.1650
    .390             -.1421
    .400                             -.1496  -.1595          -.1672
    .402                     -.1298
    .503                                                             -.1674
    .550                             -.1624  -.1637
    .565                     -.2204
    .600                                                     -.1657
    .637             -.1615
    .650                                             -.1589
    .670                                                             -.1447
    .700                                     -.1771
    .725                             -.1574
    .750                                             -.1487  -.1390
    .760                     -.1512
```

```
DATE 10 FEB 76              TABULATED PRESSURE DATA - OA148 ( AMES 11-073-1 )

                                   AMES 11-073(OA148) -140A/B/C/R ORB LEFT WING BOT                 (XEBL51)

ALPHA ( 1) =    -3.980    BETA  ( 5) =    8.339

 SECTION ( 1)LEFT WING BOT SURF                    DEPENDENT VARIABLE CP

2Y/BW         .2990    .3640    .4270    .5340    .6730    .7800    .8870    .9720

  X/CW
    .775                                -.1171   -.1039
    .799               -.1295
    .808                        -.1319
    .834      -.1455
    .839               -.1816
    .850                                -.1767   -.1395   -.1730
    .857                        -.1681
    .862                                                                    -.0774
    .865      -.1393
    .879               -.1787
    .900      -.1504                    -.1486                     -.1002
    .905                        -.1550
    .919               -.1493
    .950                                -.0587   -.0424   -.0452
    .953                        -.0742
    .955               -.0962
    .965      -.0731
   1.000                         .0464             .0673              .0849

ALPHA ( 2) =      .060    BETA  ( 1) =   -7.891   MACH   =  .59620    Q      =  593.99    P      =  2387.5    RN/L   =  4.9200

 SECTION ( 1)LEFT WING BOT SURF                    DEPENDENT VARIABLE CP

2Y/BW         .2990    .3640    .4270    .5340    .6730    .7800    .8870    .9720

  X/CW
    .010      -.0041   -.0312   -.1336   -.8917   -.8835   -.8502   -.6725
    .020       .0000   -.0610   -.2760   -.8169   -.6945   -.7308   -.7390   -.1792
    .040               -.0600   -.3523
    .050      -.0453                     -.4831   -.4782   -.4856   -.4758
    .069                                                                    -.1673
    .080                                 -.3728
    .081                        -.2784
    .086               -.0326
    .094      -.0537
    .150                                 -.2123   -.2176   -.2127   -.2166
    .157                                                                    -.1763
    .163               -.1146
    .177                        -.1895
    .229      -.0449
    .246               -.1800
    .250                                 -.1430   -.1622   -.1716   -.1647
    .274                        -.1303
    .345                                                                    -.1313
    .398               -.1129
```

AMES 11-073(OA148) -140A/B/C/R ORB LEFT WING BOT (XEBL51)

ALPHA (2) = .060 BETA (1) = -7.891

SECTION (1)LEFT WING BOT SURF DEPENDENT VARIABLE CP

2Y/BW	.2990	.3640	.4270	.5340	.6730	.7800	.8870	.9720
X/CW								
.400				-.1082	-.1090		-.1232	
.402			-.0864					
.503								-.1683
.550				-.1319	-.1382			
.565			-.2672					
.600							-.1602	
.637		-.1432						
.650						-.1489		
670								-.1759
.700					-.1559			
.725				-.1267				
.750						-.1371	-.1488	
.760			-.1363					
.775				-.1010	-.0892			
.798		-.1023						
.808			-.1230					
.834	-.1298							
.839		-.1819						
.850				-.1666	-.1323	-.1768		
.857			-.1615					
.862								-.1491
.865	-.1299							
.879		-.1533						
.900	-.1360			-.1443			-.1270	
.905			-.1500					
.919		-.1319						
.950				-.0577	-.0629	-.0508		
.953			-.0531					
.955		-.0640						
.965	-.0302							
1.000			.0724		.0210		.0483	

ALPHA (2) = .070 BETA (2) = -3.863 MACH = .59620 Q = 593.99 P = 2387.5 RN/L = 4.8200

SECTION (1)LEFT WING BOT SURF DEPENDENT VARIABLE CP

2Y/BW	.2990	.3640	.4270	.5340	.6730	.7800	.8870	.9720
X/CW								
.010	.0152	.0407	-.0157	-.6670	-.7528	-.6994	-.5805	
.020	.0000	.0137	-.1298	-.6502	-.5689	-.6043	-.6432	-.1559
.040		.0218	-.2388					
.050	-.0180			-.4015	-.4061	-.4339	-.4255	
.060								-.1574
.080				-.3160				

AMES 11-073(OA148) -140A/B/C/R ORB LEFT WING BOT (XE8L51)

ALPHA (2) = .070 BETA (2) = -3.863

SECTION (1)LEFT WING BOT SURF DEPENDENT VARIABLE CP

2Y/BW X/CW	.2990	.3640	.4270	.5340	.6730	.7800	.8870	.9720
.081			-.2200					
.086		.0301						
.094	-.0270							
.150				-.1890	-.1897	-.1945	-.2086	
.157								-.1740
.163		-.0485						
.177			-.1555					
.223	-.0137							
.246		-.1426						
.250				-.1308	-.1572	-.1619	-.1652	
.274			-.1177					
.345								-.1251
.390		-.0946						
.400				-.1056	-.1061		-.1261	
.402			-.0766					
.503								-.1711
.550				-.1338	-.1390			
.565			-.2366					
.600							-.1612	
.637		-.1367						
.650						-.1531		
.670								-.1772
.700					-.1656			
.725				-.1381				
.750						-.1415	-.1526	
.760			-.1403					
.775				-.1088	-.0952			
.798		-.1118						
.808			-.1241					
.834	-.1327							
.839		-.1824						
.850				-.1721	-.1428	-.1881		
.857			-.1636					
.862								-.1501
.865	-.1251							
.879		-.1722						
.900	-.1401			-.1538			-.1313	
.905			-.1570					
.919		-.1427						
.950				-.0627	-.0623	-.0565		
.953			-.0613					
.955		-.0891						
.965	-.0498							
1.000			.0638		.0439		.0526	

```
                                AMES 11-073(OA148) -140A/B/C/R ORB LEFT WING BOT            (XE8L51)

ALPHA ( 2) =     .075   BETA ( 2) =     .185  MACH  =  .59620    Q     =  593.99     P     =  2387.5    RN/L   =  4.8200

 SECTION ( 1)LEFT WING BOT SURF            DEPENDENT VARIABLE CP

2Y/BW        .2990   .3640   .4270   .5340   .6730   .7800   .8870   .9720

  X/CW
    .010     .0136   .0729   .0926  -.5037  -.5844  -.5664  -.4899
    .020     .0000   .0564   .0093  -.4923  -.4636  -.5159  -.5640  -.1622
    .040             .0712  -.1367
    .050    -.0001                  -.3203  -.3449  -.3791  -.3794
    .069                                                            -.1471
    .080                            -.2526
    .081                    -.1519
    .096             .0710
    .094    -.0099
    .150                            -.1589  -.1713  -.1772  -.1956
    .157                                                            -.1790
    .163             .0006
    .177                    -.1281
    .229     .0069
    .246            -.1107
    .250                            -.1128  -.1419  -.1555  -.1617
    .274                    -.0979
    .345                                                            -.1285
    .390            -.0816
    .400                            -.0957  -.1063          -.1269
    .402                    -.0732
    .503                                                            -.1658
    .550                            -.1327  -.1416
    .565                    -.2219
    .600                                                    -.1627
    .637            -.1357
    .650                                            -.1503
    .670                                                            -.1757
    .700                                    -.1675
    .725                            -.1396
    .750                                            -.1449  -.1525
    .760                    -.1422
    .775                            -.1123  -.1014
    .798            -.1091
    .809                    -.1262
    .934    -.1352
    .839            -.1811
    .850                            -.1829  -.1494  -.1905
    .857                    -.1712
    .862                                                            -.1411
    .865    -.1292
    .879            -.1773
    .900    -.1451                  -.1610                  -.1290
    .905                    -.1638
    .913            -.1435
```

```
DATE 10 FEB 76            TABULATED PRESSURE DATA - OA148 ( AMES 11-073- )                                              PAGE 2410

                                      AMES 11-073(OA148) -140A/B/C/R ORB LEFT WING L                 (XEBL51)

ALPHA ( 2) =      .075    BETA  ( 3) =      .185

 SECTION ( 1)LEFT WING BOT SURF              DEPENDENT VARIABLE CP

2Y/BW        .2990   .3640   .4270   .5340   .6730   .7800   .8870   .9720

  X/CW
    .950                             -.0692  -.0576  -.0614
    .953                     -.0758
    .955             -.0889
    .965     -.0633
   1.000                      .0545           .0550           .0617
ALPHA ( 2) =      .070    BETA  ( 4) =     4.248   MACH    =  .59620     Q      =  593.93     P      =  2397.5     P  _   =  4.8200

 SECTION ( 1)LEFT WING BOT SURF              DEPENDENT VARIABLE CP

2Y/BW        .2990   .3640   .4270   .5340   .6730   .7800   .8870   .9720

  X/CW
    .010     -.0134   .0477   .1554  -.3286  -.4188  -.3878  -.3295
    .020  [illegible]   .0591   .0938  -.3571  -.3573  -.3764  -.3954  -.1440
    .040              .0779  -.0420
    .050     -.0073                  -.2310  -.2602  -.2945  -.2946
    .069                                                             -.1612
    .080                             -.1961
    .081                     -.1007
    .086              .0916
    .094     -.0081
    .150                             -.1300  -.1363  -.1479  -.1710
    .157                                                             -.1688
    .163              .0399
    .177                     -.0952
    .223      .0115
    .245             -.0789
    .250                             -.1000  -.1229  -.1349  -.1485
    .274                     -.0838
    .345                                                             -.1278
    .390             -.0661
    .400                             -.0931  -.0966          -.1219
    .402                     -.0724
    .503                                                             -.1652
    .550                             -.1217  -.1335
    .565                     -.2223
    .600                                                     -.1577
    .637             -.1264
    .650                                             -.1415
    .670                                                             -.1782
    .700                                     -.1648
    .725                             -.1395
    .750                                             -.1453  [illegible]
    .760                     -.1416
```

AMES 11-073(OA148) -140A/B/C/R ORB LEFT WING BOT (XEBL51)

ALPHA (2) = .070 BETA (4) = 4.248

SECTION (1)LEFT WING BOT SURF DEPENDENT VARIABLE CP

2Y/BW	.2990	.3640	.4270	.5340	.6730	.7800	.8870	.9720
X/CW								
.775				-.1077	-.1013			
.798		-.1110						
.808			-.1242					
.834	-.1360							
.839		-.1695						
.850				-.1811	-.1467	-.1880		
.857			-.1731					
.862								-.1429
.865	-.1267							
.879		-.1732						
.900	-.1499			-.1580			-.1293	
.905			-.1608					
.919		-.1476						
.950				-.0699	-.0524	-.0629		
.953			-.0815					
.955		-.0912						
.955	-.0762							
1.000			.0468		.0590		.0694	

ALPHA (2) = .066 BETA (5) = 8.300 MACH = .59620 Q = 593.99 P = 2387.5 RN/L = 4.8200

SECTION (1)LEFT WING BOT SURF DEPENDENT VARIABLE CP

2Y/BW	.2990	.3640	.4270	.5340	.6730	.7800	.8870	.9720
X/CW								
.010	-.1104	-.0261	.1988	-.1329	-.2605	-.2474	-.2140	
.020	.0000	.0108	.1654	-.1976	-.2241	-.2778	-.2848	-.1664
.040		.0417	.0436					
.050	-.0406			-.1422	-.1848	-.2232	-.2403	
.069								-.1844
.080				-.1322				
.081			-.0318					
.086		.0902						
.094	-.0262							
.150				-.1017	-.1109	-.1206	-.1555	
.157								-.1848
.163		.0722						
.177			-.0625					
.229	.0072							
.246		-.0484						
.250				-.0797	-.1053	-.1197	-.1344	
.274			-.0613					
.345								-.1394
.330		-.0550						

AMES 11-073(OA148) -140A/B/C/R ORB LEFT WING BOT (XEBL51)

ALPHA (2) = .066 BETA (5) = 8.300

SECTION (1)LEFT WING BOT SURF DEPENDENT VARIABLE CP

2Y/BW	.2990	.3640	.4270	.5340	.6730	.7800	.8870	.9720
X/CW								
.400				-.0830	-.0918		-.1169	
.402			-.0613					
.503								-.1704
.550				-.1165	-.1281			
.565			-.2433					
.600							-.1543	
.637		-.1229						
.650						-.1407		
.670								-.1868
.700					-.1625			
.725				-.1331				
.750						-.1402	-.1481	
.760			-.1332					
.775				-.1031	-.1003			
.798		-.1134						
.808			-.1196					
.834	-.1354							
.839		-.1649						
.850				-.1738	-.1446	-.1802		
.857			-.1601					
.862								-.1341
.865	-.1229							
.879		-.1715						
.900	-.1447			-.1557			-.1216	
.905			-.1534					
.919		-.1472						
.950				-.0788	-.0495	-.0594		
.953			-.0827					
.955		-.0943						
.965	-.0754							
1.000			.0434		.0701		.0797	

ALPHA (3) = 4.023 BETA (1) = -7.901 MACH = .59564 Q = 593.05 P = 2388.1 RN/L = 4.8166

SECTION (1)LEFT WING BOT SURF DEPENDENT VARIABLE CP

2Y/BW	.2990	.3640	.4270	.5340	.6730	.7800	.8870	.9720
X/CW								
.010	.0825	.1476	.3333	.0189	.0426	.1766	.2417	
.020	.0000	.1516	.2342	-.0850	.0075	.0407	.0880	.0135
.040		.1651	.0517					
.050	.0691			-.0822	-.0522	-.0047	.0194	
.069								-.0105
.080				-.0627				

DATE 10 FEB 76 TABULATED PRESSURE DATA - OA148 (AMES 11-073-1)

AMES 11-073(OA148) -140A/B/C/R ORB LEFT WING BOT (XEBL51)

ALPHA (3) = 4.023 BETA (1) = -7.901

SECTION (1)LEFT WING BOT SURF DEPENDENT VARIABLE CP

2Y/BW	.2990	.3540	.4270	.5340	.6730	.7800	.8870	.9720
X/CW								
.081			-.0122					
.086		.1639						
.094	.0552							
.150				-.0190	-.0061	.0154	-.0038	
.157								-.1204
.163		.0912						
.177			-.0127					
.229	.0585							
.246		-.0179						
.250				.0004	-.0070	-.0143	-.0197	
.274			-.0017					
.345								-.0564
.390		-.0033						
.400				-.0153	-.0131		-.0311	
.402			.0049					
.503								.1216
.550				-.0703	-.0703			
.565			-.2964					
.600							-.1097	
.637		-.0824						
.650						-.0998		
.670								-.1609
.700					-.1251			
.725				-.0917				
.750						-.1173	-.1170	
.760			-.1096					
.775				-.0687	-.0637			
.798		-.0723						
.808			-.0970					
.834	-.1070							
.839		-.1542						
.850				-.1492	-.1218	-.1733		
.857			-.1414					
.862								-.1867
.865	-.0995							
.879		-.1426						
.900	-.1153			-.1395			-.1457	
.905			-.1386					
.919		-.1202						
.950				-.0584	-.0520	-.0628		
.953			-.0488					
.955		-.0596						
.965	-.0214							
1.000			.0788		.0534		.0142	

```
                        AMES 11-073(OA148) -140A/B/C/R ORB LEFT WING BOT                (XEBL51)

ALPHA ( 3) =    4.027   BETA  ( 2) =   -3.864  MACH   =  .59564     Q      =  593.05     P      =  2388.1     RN/L   =  4.8166

 SECTION ( 1)LEFT WING BOT SURF                DEPENDENT VARIABLE CP

2Y/BW         .2990    .3640    .4270    .5340    .6730    .7800    .8870    .9720

  X/CW
   .010       .0152    .0641    .3358    .1180    .1041    .2282    .2662
   .020       .0000    .1113    .2749   -.0108    .0632    .0846    .1094   -.0809
   .040                .1393    .1100
   .050       .0488                      -.0206   -.0198    .0218    .0268
   .069                                                                     -.0826
   .080                                  -.0235
   .081                         .0275
   .086                .1681
   .094       .0438
   .150                                  -.0064    .0105    .0208   -.0102
   .157                                                                     -.1466
   .163                .1236
   .177                         .0052
   .229       .0589
   .246                .0041
   .250                                   .0035   -.0135   -.0154   -.0276
   .274                         .0054
   .345                                                                     -.0922
   .390                .0083
   .400                                  -.0167   -.0135            -.0458
   .402                         .0025
   .503                                                                     -.1540
   .550                                  -.0724   -.0787
   .565                        -.2721
   .600                                                             -.1255
   .637               -.0834
   .650                                                    -.1079
   .670                                                                     -.1920
   .700                                           -.1379
   .725                                  -.1069
   .750                                                    -.1237   -.1283
   .760                        -.1140
   .775                                  -.0783   -.0747
   .798               -.0769
   .808                        -.0964
   .834      -.1096
   .839               -.1598
   .850                                  -.1580   -.1339   -.1807
   .857                        -.1504
   .862                                                                     -.2015
   .865      -.1037
   .879               -.1515
   .900      -.1253                      -.1504                     -.1544
   .905                        -.1482
   .919               -.1333
```

```
                              AMES 11-073(OA148) -140A/B/C/R ORB LEFT WING BOT            (XEBL51)
ALPHA ( 3) =    4.027    BETA  ( 2) =   -3.864

 SECTION ( 1)LEFT WING BOT SURF              DEPENDENT VARIABLE CP

2Y/BW       .2990    .3640    .4270    .5340    .6730    .7800    .8870    .9720

 X/CW
   .950                               -.0626   -.0498   -.0658
   .953                      -.0605
   .955             -.0755
   .965    -.0450
  1.000                       .0699             .0638             .0227

ALPHA ( 3) =    4.029    BETA  ( 3) =     .191   MACH   =  .59564     Q     =  593.05     P     =  2388.1     RN/L   =  4.8166

 SECTION ( 1)LEFT WING BOT SURF              DEPENDENT VARIABLE CP

2Y/BW       .2990    .3640    .4270    .5340    .6730    .7800    .8870    .9720

 X/CW
   .010    -.0884   -.0612    .3033    .1717    .1385    .2392    .2412
   .020     .0000    .0458    .2884    .0557    .0956    .1120    .1211   -.1850
   .040              .0827    .1557
   .050     .0095                      .0257    .0142    .0268    .0354
   .069                                                                  -.1643
   .080                               -.0007
   .081                       .0615
   .085              .1583
   .094     .0215
   .150                                .0025    .0116    .0186   -.0208
   .157                                                                  -.1762
   .163              .1434
   .177                       .0211
   .229     .0581
   .246              .0201
   .250                                .0085   -.0093   -.0172   -.0441
   .274                       .0092
   .345                                                                  -.1358
   .390              .0151
   .400                               -.0144   -.0202            -.0597
   .402                       .0009
   .503                                                                  -.1855
   .550                               -.0722   -.0824
   .565                      -.2309
   .600                                                          -.1368
   .637             -.0818
   .650                                                 -.1147
   .670                                                                  -.2076
   .700                                        -.1408
   .725                               -.1093
   .750                                                 -.1426   -.1437
   .760                      -.1158
```

AMES 11-073(OA148) -140A/B/C/R ORB LEFT WING BOT (XE8L51)

ALPHA (3) = 4.029 BETA (3) = .191

SECTION (1)LEFT WING BOT SURF DEPENDENT VARIABLE CP

2Y/BW	.2990	.3640	.4270	.5340	.6730	.7800	.8870	.9720
X/CW								
.775				-.0810	-.0828			
.798		-.0840						
.808			-.1020					
.834	-.1095							
.839		-.1604						
.850				-.1677	-.1415	-.1904		
.857			-.1515					
.862								-.2128
.865	-.1035							
.879		-.1585						
.900	-.1282			-.1534			-.1584	
.905			-.1515					
.919		-.1368						
.950				-.0717	-.0536	-.0737		
.953			-.0730					
.955		-.0825						
.965	-.0516							
1.000			.0627		.0698		.0238	

ALPHA (3) = 4.031 BETA (4) = 4.239 MACH = .59564 Q = 593.05 P = 2388.1 RN/L = 4.8166

SECTION (1)LEFT WING BOT SURF DEPENDENT VARIABLE CP

2Y/BW	.2990	.3640	.4270	.5340	.6730	.7800	.8870	.9720
X/CW								
.010	-.2120	-.2270	.2233	.2294	.1914	.2661	.2572	
.020	.0000	-.0749	.2627	.1169	.1404	.1577	.1492	-.3472
.040		-.0128	.1791					
.050	-.0524			.0721	.0548	.0652	.0681	
.069								-.2810
.080				.0317				
.081			.0866					
.086		.1190						
.094	-.0173							
.150				.0185	.0344	.0250	-.0145	
.157								-.2179
.163		.1480						
.177			.0372					
.229	.0379							
.246		.0283						
.250				.0140	.0052	-.0112	-.0437	
.274			.0201					
.345								-.1800
.390		.0214						

```
                              AMES 11-073(OA148) -140A/B/C/R ORB LEFT WING BOT            (XEBL51)

ALPHA ( 3) =     4.031    BETA  ( 4) =     4.239

 SECTION ( 1)LEFT WING BOT SURF                  DEPENDENT VARIABLE CP

2Y/BW          .2990     .3640     .4270     .5340     .6730     .7800     .8870     .9720

  X/CW
      .400                                  -.0141    -.0160              -.0650
      .402                         .0063
      .503                                                                          -.2256
      .550                                  -.0705    -.0818
      .565                        -.2519
      .600                                                                -.1425
      .637              -.0756
      .650                                                      -.1157
      .670                                                                          -.2324
      .700                                            -.1405
      .725                                  -.1064
      .750                                                      -.1393    -.1454
      .760                        -.1184
      .775                                  -.0793    -.0848
      .798              -.0902
      .808                        -.0980
      .834    -.1129
      .839              -.1516
      .850                                  -.1723    -.1430    -.1916
      .857                        -.1533
      .862                                                                          -.2241
      .865    -.1086
      .879              -.1608
      .900    -.1304                        -.1616                        -.1563
      .905                        -.1569
      .919              -.1455
      .950                                  -.0788    -.0563    -.0781
      .953                        -.0794
      .955              -.0936
      .965    -.0669
     1.000                         .0382               .0624               .0251

ALPHA ( 3) =     4.035    BETA  ( 5) =     8.279  MACH   =  .59564     Q     =  593.05     P     =  2388.1     RN/L   =  4.8166

 SECTION ( 1)LEFT WING BOT SURF                  DEPENDENT VARIABLE CP

2Y/BW          .2990     .3640     .4270     .5340     .6730     .7800     .8870     .9720

  X/CW
      .010    -.3904    -.3696     .0926     .2612     .2138     .2511     .2274
      .020     .0000    -.1952     .1831     .1667     .1568     .1690     .1452    -.5070
      .040              -.1302     .1759
      .050    -.1258                         .108[illegible]     .0938     .0726     .0647
      .069                                                                          -.3998
      .080                                   .0607
```

AMES 11-073(OA148) -140A/B/C/R ORB LEFT WING BOT (XEBL51)

ALPHA (3) = 4.035 BETA (5) = 8.279

SECTION (1)LEFT WING BOT SURF DEPENDENT VARIABLE CP

2Y/BW	.2930	.3640	.4270	.5340	.6730	.7800	.8870	.9720
X/CW								
.081			.1057					
.086		.0565						
.094	-.0727							
.150				.0337	.0365	.0352	-.0284	
.157								-.2659
.163		.1418						
.177			.0515					
.229	.0048							
.246		.0282						
.250				.0121	.0023	-.0123	-.0575	
.274			.0262					
.345								-.2397
.390		.0194						
.400				-.0183	-.0198		-.0803	
.402			-.0002					
.503								-.2689
.550				-.0738	-.0853			
.555			-.2863					
.600							-.1490	
.637		-.0796						
.650						-.1182		
.670								-.2642
.700					-.1392			
.725				-.1107				
.750						-.1367	-.1521	
.760			-.1144					
.775				-.0848	-.0884			
.798		-.0930						
.808			-.1021					
.834	-.1171							
.839		-.1504						
.850				-.1654	-.1423	-.1856		
.857			-.1470					
.862								-.2322
.865	-.1054							
.879		-.1620						
.900	-.1361			-.1554			-.1505	
.905			-.1549					
.919		-.1516						
.950				-.0790	-.0528	-.0733		
.953			-.0859					
.955		-.0976						
.965	-.0814							
1.000			.0291		.0598		.0235	

AMES 11-073(OA148) -140A/B/C/R ORB LEFT WING BOT (XEBL51)

ALPHA (4) = 8.061 BETA (1) = -7.886 MACH = .59572 Q = 593.16 P = 2387.8 RN/L = 4.8368

SECTION (1)LEFT WING BOT SURF DEPENDENT VARIABLE CP

2Y/BW	.2990	.3640	.4270	.5340	.6730	.7800	.8870	.9720
X/CW								
.010	-.0299	-.0915	.3959	.5001	.5099	.5752	.5493	
.020	.0000	.0934	.4431	.3684	.4344	.4685	.4747	-.3001
.040		.1539	.3333					
.050	.1005			.2526	.2946	.3305	.3392	
.069								-.1512
.080				.2039				
.081			.2185					
.086		.2643						
.094	.1092							
.150				.1629	.1902	.2099	.1737	
.157								-.1481
.163		.2569						
.177			.1520					
.229	.1428							
.246		.1326						
.250				.1357	.1386	.1371	.1067	
.274			.1258					
.345								-.0672
.390		.1102						
.400				.0805	.0931		.0529	
.402			.0989					
.503								-.1378
.550				.0056	.0017			
.565			-.2960					
.600							-.0638	
.637		-.0170						
.650						-.0468		
.670								-.1635
.700					-.0796			
.725				-.0486				
.750						-.0725	-.0853	
.760			-.0709					
.775				-.0227	-.0237			
.798		-.0369						
.808			-.0571					
.834	-.0714							
.839		-.1238						
.850				-.1238	-.1015	-.1527		
.857			-.1102					
.862								-.2427
.865	-.0647							
.879		-.1165						
.900	-.0880			-.1198			-.1616	
.905			-.1193					
.919		-.1021						

```
                         AMES 11-073(OA148) -140A/B/C/R ORB LEFT WING BOT             (XE8L51)

ALPHA ( 4) =    8.061    BETA  ( 1) =   -7.886

 SECTION ( 1)LEFT WING BOT SURF           DEPENDENT VARIABLE CP

2Y/BW        .2990   .3640   .4270   .5340   .6730   .7800   .8870   .9720

  X/CW
    .950                                -.0497  -.0339  -.0725
    .953                        -.0426
    .955                -.0468
    .965        -.0134
   1.000                         .0722           .0813          -.0808

ALPHA ( 4) =    8.070    BETA  ( 2) =   -3.859   MACH   =  .59572    Q     =  593.16    P     =  2387.8    RN/L   =  4.8368

 SECTION ( 1)LEFT WING BOT SURF           DEPENDENT VARIABLE CP

2Y/BW        .2990   .3640   .4270   .5340   .6730   .7800   .8870   .9720

  X/CW
    .010        -.1871  -.3136   .2717   .4855   .4833   .5103   .4685
    .020         .0000  -.0500   .3739   .3771   .4206   .4415   .4290  -.5170
    .040                 .0348   .3296
    .050         .0310                   .2692   .2954   .3145   .3169
    .069                                                                -.3093
    .080                                 .2125
    .081                         .2233
    .085                 .2169
    .094         .0653
    .150                                 .1622   .1952   .2017   .1497
    .157                                                                -.2010
    .163                 .2607
    .177                         .1564
    .229         .1231
    .246                 .1352
    .250                                 .1332   .1270   .1276   .0818
    .274                         .1262
    .345                                                                -.1408
    .390                 .1155
    .400                                 .0820   .0815           .0312
    .402                         .0986
    .503                                                                -.2003
    .550                                 .0034  -.0034
    .565                        -.2837
    .600                                                        -.0849
    .637                -.0133
    .650                                                -.0639
    .670                                                                -.2053
    .700                                        -.0945
    .725                                -.0635
    .750                                                -.0885  -.1082
    .760                        -.0739
```

AMES 11-073(OA148) -140A/B/C/R ORB LEFT WING BOT (XEBL51)

ALPHA (4) = 8.070 BETA (2) = -3.859

SECTION (1)LEFT WING BOT SURF DEPENDENT VARIABLE CP

2Y/BW	.2990	.3640	.4270	.5340	.6730	.7800	.8870	.9720
X/CW								
.775				-.0380	-.0379			
.798		-.0451						
.808			-.0593					
.834	-.0738							
.839		-.1257						
.850				-.1324	-.1124	-.1655		
.857			-.1220					
.862								-.2736
.865	-.0645							
.879		-.1238						
.900	-.0305			-.1381			-.1699	
.905			-.1334					
.919		-.1162						
.930				-.0647	-.0468	-.0845		
.953			-.0579					
.965		-.0668						
.985	-.0235							
1.000			.0652		.0706		-.0552	

ALPHA (4) = 8.069 BETA (3) = .180 MACH = .59572 Q = 593.16 P = 2387.8 RN/L = 4.8358

SECTION (1)LEFT WING BOT SURF DEPENDENT VARIABLE CP

2Y/BW	.2990	.3640	.4270	.5340	.6730	.7800	.8870	.9720
X/CW								
.010	-.3666	-.5586	.1109	.4441	.4292	.4291	.3710	
.020	.0000	-.2150	.2830	.3699	.3912	.3990	.3634	-.7220
.040		-.1113	.3032					
.050	-.0587			.2671	.2881	.2901	.2758	
.059								-.4696
.080				.2107				
.081			.2278					
.086		.1444						
.094	.0068							
.150				.1548	.1829	.1796	.1178	
.157								-.2613
.163		.2430						
.177			.1596					
.229	.0901							
.246		.1321						
.250				.1241	.1193	.1110	.0563	
.274			.1206					
.345								-.2104
[illegible]		.1111						

```
                                  AMES 11-073(OA148) -140A/B/C/R ORB LEFT WING BOT           (XEBL51)

ALPHA ( 4) =    8.069    BETA  ( 3) =     .180

 SECTION ( 1)LEFT WING BOT SURF              DEPENDENT VARIABLE CP

2Y/BW        .2990   .3640   .4270   .5340   .6730   .7800   .8870   .9720

  X/CW
    .400                             .0703   .0721            .0037
    .402                     .0873
    .503                                                              -.2677
    .550                            -.0073  -.0160
    .565                    -.2597
    .600                                                     -.1054
    .637            -.0141
    .650                                            -.0679
    .670                                                              -.2484
    .700                                    -.0945
    .725                            -.0689
    .750                                            -.0982  -.1159
    .760                    -.0829
    .775                            -.0351  -.0448
    .798            -.0518
    .808                    -.0646
    .834   -.0782
    .839            -.1217
    .850                            -.1401  -.1193  -.1720
    .857                    -.1271
    .862                                                              -.2902
    .865   -.0708
    .879            -.1306
    .900   -.1050                   -.1401                   -.1693
    .905                    -.1390
    .919            -.1217
    .950                            -.0668  -.0561  -.0887
    .953                    -.0619
    .955            -.0707
    .965   -.0388
   1.000                     .0598           .0582           -.0293
ALPHA ( 4) =    8.069    BETA  ( 4) =    4.237   MACH   =  .59572     Q     =  593.16     P     =  2387.8     RN/L   =  4.8358

 SECTION ( 1)LEFT WING BOT SURF              DEPENDENT VARIABLE CP

2Y/BW        .2990   .3640   .4270   .5340   .6730   .7800   .8870   .9720

  X/CW
    .010   -.5537  -.6923  -.0676   .3784   .3702   .3259   .2536
    .020    .0000  -.3499   .1522   .3426   .3511   .3523   .3012  -.9751
    .040           -.2476   .2559
    .050   -.1543                    .2594   .2814   .2706   .2470
    .069                                                             -.6447
    .080                             .2062
```

AMES 11-073(OA148) -140A/B/C/R ORB LEFT WING BOT (XEBL51)

ALPHA (4) = 8.069 BETA (4) = 4.237

SECTION (1)LEFT WING BOT SURF DEPENDENT VARIABLE CP

2Y/BW	.2990	.3640	.4270	.5340	.6730	.7800	.8870	.9720
X/CW								
.081			.2059					
.086		.0675						
.094	-.0646							
.150				.1468	.1674	.1698	.0890	
.157								-.3367
.163		.2123						
.177			.1503					
.229	.0416							
.246		.1213						
.250				.1127	.1075	.0962	.0328	
.274			.1123					
.345								-.2950
.390		.1055						
.400				.0606	.0552		-.0258	
.402			.0771					
.503								-.3330
.550				-.0134	-.0238			
.565			-.2834					
.600							-.1225	
.637		-.0165						
.650						-.0870		
.673								-.2889
.700					-.1077			
.725				-.0779				
.750						-.1116	-.1389	
.760			-.0790					
.775				-.0512	-.0620			
.798		-.0609						
.808			-.0669					
.834	-.0808							
.839		-.1280						
.850				-.1467	-.1287	-.1798		
.857			-.1268					
.862								-.3067
.865	-.0734							
.879		-.1386						
.900	-.1054			-.1467			-.1785	
.905			-.1310					
.913		-.1284						
.940				-.0769	-.0577	-.1036		
.953			-.0690					
.975		-.0841						
[illegible]	-.0505							
1.000			.0396		.0523		-.0168	

```
DATE 10 FEB 76              TABULATED PRESSURE DATA - OA148 ( AMES 11-073-1 )                                  PAGE 2424

                                      AMES 11-073(OA148) -140A/B/C/R ORB LEFT WING BOT             (XEBL51)

ALPHA ( 4) =     8.063    BETA  ( 5) =     8.284   MACH   =  .59572     Q      =  593.16     P      =  2387.8     RN/L   =  4.8358

 SECTION ( 1)LEFT WING BOT SURF                    DEPENDENT VARIABLE CP

2Y/BW        .2990     .3640     .4270     .5340     .6730     .7800     .8870     .9720

  X/CW
    .010    -.7614    -.6468    -.2977     .2817     .2801     .1887     .1197
    .020     .0000    -.4371    -.0164     .2917     .2928     .2783     .2049   -1.2242
    .040              -.3407     .1860
    .050    -.2628                         .2392     .2521     .2320     .1932
    .069                                                                          -.8318
    .080                                   .1853
    .081                         .1822
    .086              -.0115
    .094    -.1477
    .150                                   .1346     .1556     .1500     .0593
    .157                                                                          -.4074
    .163               .1693
    .177                         .1405
    .229    -.0057
    .245               .0377
    .250                                   .0919     .0952     .0764     .0089
    .274                         .1050
    .345                                                                          -.3794
    .330               .0899
    .400                                   .0433     .0490              -.0454
    .402                         .0624
    .503                                                                          -.3886
    .550                                  -.0170    -.0332
    .565                        -.3122
    .600                                                                -.1403
    .637              -.0295
    .640                                                      -.0987
    .670                                                                          -.3243
    .700                                            -.1199
    .725                                  -.0824
    .750                                                      -.1261    -.1592
    .760                        -.0881
    .775                                  -.0613    -.0775
    .798              -.0705
    .809                        -.0745
    .834    -.0821
    .849              -.1293
    .850                                  -.1496    -.1437    -.1871
    .857                        -.1403
    .862                                                                          -.3058
    .865    -.0780
    .879              -.1456
    .900    -.1130                        -.1596                        -.1848
    .905                        -.1462
    .919              -.1392
```

REPRODUCIBILITY OF THE ORIGINAL PAGE IS POOR

AMES 11-073(OA148) · 140A/B/C/R ORB LEFT WING BOT (XEBL51)

ALPHA (4) = 8.063 BETA (5) = 8.284

SECTION (1)LEFT WING BOT SURF DEPENDENT VARIABLE CP

2Y/BW	.2990	.3640	.4270	.5340	.6730	.7800	.8870	.9720
X/CW								
.950				-.0834	-.0695	-.1176		
.953			-.0876					
.955		-.0948						
.965	-.0712							
1.000			.0312		.0276		-.0165	

ALPHA (5) = 12.002 BETA (1) = -7.847 MACH = .59550 Q = 592.81 P = 2388.1 RN/L = 4.8267

SECTION (1)LEFT WING BOT SURF DEPENDENT VARIABLE CP

2Y/BW	.2990	.3640	.4270	.5340	.6730	.7800	.8870	.9720
X/CW								
.010	-.3178	-.6772	.1089	.5991	.5987	.5061	.4400	
.020	.0000	-.1702	.3739	.5736	.6018	.5929	.5344	-.8190
.040		-.0430	.4609					
.050	.0572			.4645	.5049	.5101	.4863	
.069								-.4543
.080				.3903				
.081			.3820					
.086		.2657						
.094	.1244							
.150				.3158	.3513	.3579	.2972	
.157								-.2181
.163		.3768						
.177			.2852					
.229	.2013							
.246		.2628						
.250				.2581	.2629	.2622	.2079	
.274			.2386					
.345								-.1001
.390		.2215						
.400				.1762	.1830		.1284	
.402			.1890					
.553								-.1655
.550				.0878	.0783			
.565			-.3292					
.600							-.0133	
.637		.0522						
.650						.0094		
.670								-.1601
.700					-.0330			
.725				-.0067				
.751						-.0396	-.0494	
.760			-.0316					

```
                                 AMES 11-073(OA148) -140A/B/C/R ORB LEFT WING BOT              (XE8L51)

ALPHA ( 5) =    12.002    BETA  ( 1) =   -7.847

 SECTION ( 1)LEFT WING BOT SURF            DEPENDENT VARIABLE CP

2Y/BW        .2990    .3640    .4270    .5340    .6730    .7800    .8870    .9720

  X/CW
   .775                                  .0240    .0014
   .798               .0016
   .808                       -.0102
   .834      -.0365
   .839              -.0775
   .850                                 -.0948   -.0861   -.1341
   .857                       -.0727
   .862                                                                    -.2959
   .865      -.0216
   .879              -.0820
   .900      -.0536                     -.1098                     -.1775
   .905                       -.0996
   .919              -.0829
   .940                                 -.0581   -.0399   -.0945
   .953                       -.0345
   .955              -.0357
   .965       .0046
  1.000                        .0599              .0613             -.1336
ALPHA ( 5) =    12.023    BETA  ( 2) =   -3.840   MACH   =  .59550    Q     =  592.81     P     =  2388.1     RN/L   =  4.8267

 SECTION ( 1)LEFT WING BOT SURF            DEPENDENT VARIABLE CP

2Y/BW        .2990    .3640    .4270    .5340    .6730    .7800    .8870    .9720

  X/CW
   .010      -.5501   -.9157   -.1154    .5008    .4972    .3629    .2935
   .020       .0000   -.3449    .2300    .5234    .5363    .5107    .4344 -1.0700
   .040              -.2054    .4026
   .050      -.0510                      .4433    .4813    .4665    .4301
   .069                                                                    -.6266
   .080                                  .3753
   .081                        .3584
   .086               .1808
   .094       .0505
   .150                                  .2979    .3287    .3366    .2526
   .157                                                                    -.2841
   .163               .3446
   .177                        .2845
   .229       .1614
   .246               .2491
   .250                                  .2439    .2440    .2384    .1729
   .274                        .2372
   .345                                                                    -.1860
   .390               .2144
```

```
DATE 10 FEB 76          TABULATED PRESSURE DATA - OA148 ( AMES 11-073-1 )                    PAGE 2427
                                    AMES 11-073(OA148) -140A/B/C/R ORB LEFT WING BOT          (XEBL51)

ALPHA ( 5) =   12.023    BETA  ( 2) =    -3.640

 SECTION ( 1)LEFT WING BOT SURF             DEPENDENT VARIABLE CP

2Y/BW      .2990   .3640   .4270   .5340   .6730   .7800   .8870   .9720

 X/CW
   .400                            .1696   .1674           .0906
   .402                    .1839
   .503                                                           -.2422
   .550                            .0706   .0625
   .565                   -.2768
   .600                                                   -.0458
   .637            .0584
   .650                                           -.0099
   .670                                                           -.2192
   .700                                   -.0483
   .725                           -.0184
   .750                                           -.0536  -.0747
   .760                   -.0315
   .775                            .0087  -.0132
   .793           -.0064
   .808                   -.0175
   .834   -.0371
   .839           -.0858
   .850                           -.1065  -.1027  -.1563
   .857                   -.0833
   .862                                                           -.3273
   .865   -.0214
   .879           -.0954
   .890   -.0601                  -.1201                  -.1897
   .905                   -.1066
   .919           -.0945
   .950                           -.0599  -.0624  -.1204
   .953                   -.0419
   .955           -.0551
   .965   -.0126
  1.000                    .0691           .0576          -.1409
ALPHA ( 5) =   12.027    BETA  ( 3) =     .177  MACH   =  .59558    Q     =   592.81     P     =  2388.1    RN/L   =  4.8267

 SECTION ( 1)LEFT WING BOT SURF             DEPENDENT VARIABLE CP

2Y/BW      .2990   .3640   .4270   .5340   .6730   .7800   .8870   .9720

 X/CW
   .030   -.7830 -1.1241  -.3487   .3820   .3844   .2015   .1377
   .020    .0000  -.5389   .0506   .4513   .4506   .4166   .3258 -1.2790
   .040           -.3836   .3227
   .050   -.1683                   .4090   .4334   .4100   .3578
   .069                                                           -.7993
   .080                            .3484
```

AMES 11-073(OA148) -140A/B/C/R ORB LEFT WING BOT (XEBL51)

ALPHA (5) = 12.027 BETA (3) = .177

SECTION (1)LEFT WING BOT SURF DEPENDENT VARIABLE CP

2Y/BW X/CW	.2990	.3640	.4270	.5340	.6730	.7800	.8870	.9720
.081			.3201					
.086		.0767						
.094	-.0403							
.150				.2741	.3004	.3027	.2047	
.157								-.3470
.163		.2973						
.177			.2622					
.229	.1034							
.246		.2194						
.250				.2218	.2222	.2119	.1312	
.274			.2134					
.345								-.2821
.390		.1934						
.400				.1474	.1476		.0556	
.402			.1648					
.503								-.3140
.550				.0608	.04[illegible]0			
.565			-.2808					
.600							-.0719	
.637		.0457						
.650						-.0306		
.670								-.2649
.700					-.0694			
.725				-.0337				
.750						-.0791	-.0996	
.760			-.0490					
.775				.0056	-.0381			
.798		-.0209						
.808			-.0299					
.834	-.0489							
.839		-.0961						
.850				-.1172	-.1233	-.1699		
.857			-.1057					
.862								-.3394
.865	-.0379							
.879		-.1088						
.900	-.0748			-.1341			-.2117	
.905			-.1229					
.919		-.1072						
.950				-.0713	-.0718	-.1351		
.953			-.0695					
.955		-.0691						
.965	-.0351							
1.000			.0049		.0033		-.1328	

AMES 11-073(OA148) -140A/B/C/R ORB LEFT WING BOT (XEBL51)

ALPHA (5) = 12.024 BETA (4) = 4.250 MACH = .59550 Q = 592.81 P = 2388.1 RN/L = 4.8267

SECTION (1)LEFT WING BOT SURF DEPENDENT VARIABLE CP

2Y/BW X/CW	.2930	.3540	.4270	.5340	.6730	.7800	.8870	.9720
.010	-.9915	-.9601	-.5532	.2361	.2445	.0217	-.0465	
.020	.0000	-.6070	-.1130	.3611	.3599	.3053	.2073	-1.4756
.040		-.4660	.2291					
.050	-.2892			.3527	.3794	.3466	.2830	
.069								-.9519
.080				.3136				
.081			.2729					
.096		-.0109						
.094	-.1269							
.150				.2482	.2692	.2696	.1669	
.157								-.4028
.163		.2447						
.177			.2372					
.229	.0517							
.246		.1830						
.250				.1983	.1983	.1850	.1000	
.274			.1968					
.345								-.3344
.390		.1797						
.400				.1321	.1273		.0274	
.402			.1542					
.503								-.3636
.550				.0418	.0253			
.565			-.2915					
.600							-.0904	
.637		.0435						
.650						-.0495		
.670								-.3106
.700					-.0882			
.745				-.0486				
.750						-.0982	-.1236	
.760			-.0566					
.775				-.0141	-.0604			
.798		-.0322						
.808			-.0331					
.834	-.0524							
.839		-.0886						
.850				-.1366	-.1415	-.1900		
.857			-.1078					
.862								-.3327
.865	-.0341							
.879		-.1120						
.900	-.0792			-.1502			-.2197	
.905			-.1330					
.919		-.1105						

```
DATE 10 FEB 76              TABULATED PRESSURE DATA - OA148 ( AMES 11-073-1 )                                      PAGE 2430

                                   AMES 11-073(OA148) -140A/B/C/R ORB LEFT WING BOT                (XEBL51)

ALPHA ( 5) =    12.024    BETA  ( 4) =     4.250

 SECTION ( 1)LEFT WING BOT SURF              DEPENDENT VARIABLE CP

2Y/BW        .2990   .3640   .4270   .5340   .6730   .7800   .8870   .9720

  X/CW
   .950                          -.1009  -.0703  -.1562
   .953                  -.0778
   .955          -.0775
   .965  -.0443
  1.000                   .0293           .0168           -.1414

ALPHA ( 5) =    12.010    BETA  ( 5) =     8.307   MACH  =  .59550     Q     =  592.81     P     =  2388.1     RN/L  =  4.8267

 SECTION ( 1)LEFT WING BOT SURF              DEPENDENT VARIABLE CP

2Y/BW        .2990   .3640   .4270   .5340   .6730   .7800   .8870   .9720

  X/CW
   .010 -1.2316  -.7384  -.7890   .0742   .0810  -.1989  -.2468
   .020   .0000  -.6510  -.3045   .2522   .2443   .1786   .0658 -1.5892
   .040          -.5347   .1233
   .050  -.4256                   .2975   .3136   .2723   .2063
   .069                                                         -1.0990
   .080                           .2624
   .081                   .2228
   .086          -.0947
   .094  -.2339
   .150                           .2175   .2327   .2305   .1220
   .157                                                          -.4571
   .163           .1873
   .177                   .2112
   .229  -.0039
   .246           .1526
   .250                           .1676   .1723   .1567   .0654
   .274                   .1765
   .345                                                          -.3867
   .390           .1653
   .400                           .1163   .1046           -.0044
   .402                   .1328
   .503                                                          -.4118
   .550                           .0328   .0123
   .565                  -.3207
   .600                                                   -.1124
   .637           .0440
   .650                                           -.0562
   .670                                                          -.3394
   .700                                  -.0874
   .745                          -.0522
   .750                                           -.1088  -.1378
   .760                  -.0527
```

REPRODUCIBILITY OF THE
ORIGINAL PAGE IS POOR

```
DATE 10 FEB 76              TABULATED PRESSURE DATA - OA148 ( AMES 11-073-1 )                                      PAGE 2431
                                      AMES 11-073(OA148) -140A/B/C/R ORB LEFT WING BOT               (XE8L51)

ALPHA ( 5) =   12.010    BETA  ( 5) =    8.307

 SECTION ( 1)LEFT WING BOT SURF              DEPENDENT VARIABLE CP

2Y/BW        .2990   .3640   .4270   .5340   .6730   .7800   .8870   .9720

  X/CW
      .775                           -.0211  -.0615
      .798           -.0417
      .808                   -.0413
      .834   -.0582
      .839           -.0935
      .850                           -.1398  -.1452  -.1867
      .857                   -.1024
      .862                                                           -.3217
      .865   -.0414
      .879           -.1178
      .900   -.0824                  -.1533                  -.2182
      .905                   -.1228
      .919           -.1173
      .950                           -.1068  -.0888  -.1541
      .953                   -.0712
      .955           -.0869
      .965   -.0563
     1.000                    .0435          -.0079          -.1174
```

```
                                         AMES 11-073(OA148) -140A/B/C/R ORB LEFT WING BOT          (XE9L52)    ( 05 AUG 75  )

                    REFERENCE DATA                                                                      PARAMETRIC DATA

SREF   =  2690.0000 SQ.FT.     XMRP   =  1076.6800 IN. XO                              RUDDER =   -10.000   SPDBRK =    55.000
LREF   =   474.8000 IN.        YMRP   =      .0000 IN. YO                              BDFLAP =    16.300   L-ELVN =    -4.000
BREF   =   936.6800 IN.        ZMRP   =   375.0000 IN. ZO                              R-ELVN =     4.000   MACH   =     1.400
SCALE  =      .0300

ALPHA ( 1) =   -4.050    BETA  ( 1) =   -3.860   MACH   =  1.3963    Q      =  600.46    P      =  439.94    RN/L   =  2.9139

 SECTION ( 1)LEFT WING BOT SURF                DEPENDENT VARIABLE CP

2Y/BW          .2990    .3640    .4270    .5340    .6730    .7800    .8870    .9720

  X/CW
    .010      -.1718   -.2496   -.1353   -.2711   -.3535   -.2188   -.1885
    .020       .0000   -.2378   -.2494   -.4112   -.3968   -.4092   -.4001   -.4539
    .040                -.2357   -.3159
    .050      -.1564                      -.4438   -.4258   -.4416   -.4326
    .069                                                                      -.4874
    .090                                  -.4400
    .081                         -.1916
    .086               -.1244
    .094      -.1431
    .150                                  -.3994   -.3878   -.3906   -.3955
    .157                                                                      -.2042
    .163               -.0321
    .177                         -.1742
    .229      -.1063
    .246               -.1159
    .250                                  -.2122   -.3596   -.3542   -.3671
    .274                         -.1622
    .345                                                                      -.4161
    .390               -.1388
    .400                                  -.1735   -.3088            -.3274
    .402                         -.1518
    .503                                                                      -.3401
    .550                                  -.1358   -.1580
    .565                         -.3025
    .600                                                             -.3156
    .637               -.0954
    .650                                                    -.3166
    .670                                                                      -.5017
    .700                                           -.2001
    .725                                  -.1636
    .750                                                    -.3554   -.4241
    .760                         -.1725
    .775                                  -.3045   -.3114
    .798               -.1446
    .808                         -.3237
    .834      -.1764
    .839               -.3281
    .850                                  -.3738   -.2748   -.3932
```

```
DATE 10 FEB 76          TABULATED PRESSURE DATA - OA148 ( AMES 11-073-1 )

                              AMES 11-073(OA148) -140A/B/C/R ORB LEFT WING BOT            (XEBL52)

ALPHA ( 1) =    -4.050    BETA  ( 1) =   -3.860

 SECTION ( 1)LEFT WING BOT SURF                DEPENDENT VARIABLE CP

2Y/BW         .2990   .3640   .4270   .5340   .6730   .7800   .8870   .9720

  X/CW
   .857                       -.3525                                  -.5327
   .862
   .865      -.3258
   .879              -.3278
   .900      -.2359                   -.4058                  -.4900
   .905                       -.4239
   .919              -.3276
   .950                               -.3233  -.4334  -.4274
   .953                       -.2048
   .955              -.2336
   .965      -.3341
  1.000                       -.1327          -.2062          -.3751
ALPHA ( 1) =    -4.043    BETA  ( 2) =     .186   MACH   =  1.3963     Q     =  600.46     P     =  439.94     RN/L   =  2.9139

 SECTION ( 1)LEFT WING BOT SURF                DEPENDENT VARIABLE CP

2Y/BW         .2990   .3640   .4270   .5340   .6730   .7800   .8870   .9720

  X/CW
   .010      -.0969  -.1175  -.0569  -.2716  -.3733  -.2583  -.2389
   .020       .0000  -.1158  -.1268  -.4098  -.4135  -.4357  -.4322  -.5010
   .040              -.1166  -.1785
   .050      -.1042                  -.4297  -.4381  -.4662  -.4618
   .069                                                              -.5152
   .080                              -.3927
   .081                      -.1528
   .086              -.0527
   .094      -.0935
   .150                              -.3175  -.3954  -.4106  -.4229
   .157                                                              -.3261
   .163               .0178
   .177                      -.1346
   .229      -.0666
   .246              -.0761
   .250                              -.1585  -.3587  -.3703  -.3935
   .274                      -.1256
   .345                                                              -.4651
   .390              -.0953
   .400                              -.1424  -.1561          -.3474
   .402                      -.1150
   .503                                                              -.3660
   .550                              -.1069  -.1364
   .565                      -.3099
   .600                                                      -.3289
```

```
                         AMES 11-073(OA148) -140A/B/C/R ORB LEFT WING BOT          (XE8L52)

ALPHA ( 1) =   -4.043    BETA  ( 2) =     .186

 SECTION ( 1)LEFT WING BOT SURF              DEPENDENT VARIABLE CP

2Y/BW        .2990   .3640   .4270   .5340   .6730   .7800   .8870   .9720

  X/CW
  .637              -.0749
  .650                                              -.1719
  .670                                                              -.4968
  .700                                      -.1677
  .725                              -.1516
  .750                                              -.3185  -.4110
  .760                      -.1663
  .775                              -.2979  -.2747
  .793              -.1474
  .809                      -.3073
  .834      -.1557
  .839              -.3123
  .850                              -.3676  -.2688  -.3722
  .857                      -.3456
  .862                                                              -.5560
  .865      -.2955
  .873              -.3059
  .900      -.2321                  -.3985                  -.4144
  .905                      -.3997
  .919              -.3196
  .950                              -.4074  -.4321  -.3983
  .953                      -.2891
  .955              -.3399
  .965      -.3638
 1.000                      -.1568          -.2264          -.2572
ALPHA ( 1) =   -4.048    BETA  ( 3) =    4.268  MACH  =  1.3963   Q     =  600.46   P     =  439.94   RN/L  =  2.91

 SECTION ( 1)LEFT WING BOT SURF              DEPENDENT VARIABLE CP

2Y/BW        .2990   .3640   .4270   .5340   .6730   .7800   .8870   .9720

  X/CW
  .010      -.0758  -.0330   .0380  -.2641  -.3924  -.2927  -.2743
  .020       .0000  -.0455   .0047  -.3913  -.4226  -.4508  -.4554  -.5207
  .040              -.0393  -.0759
  .050      -.0744                  -.3545  -.4441  -.4777  -.4821
  .069                                                              -.5174
  .080                              -.3388
  .081                      -.0971
  .086              -.0035
  .094      -.0333
  .150                              -.1830  -.3821  -.4170  -.4343
  .157                                                              -.3332
  .163               .0513
```

AMES 11-073(OA148) -140A/B/C/R ORB LEFT WING BOT (XEBL52)

ALPHA (1) = -4.048 BETA (3) = 4.268

SECTION (1)LEFT WING BOT SURF DEPENDENT VARIABLE CP

2Y/BW	.2990	.3640	.4270	.5340	.6730	.7800	.8870	.9720
X/CW								
.177			-.0954					
.229	-.0512							
.246		-.0429						
.250				-.1322	-.1844	-.3615	-.4038	
.274			-.0863					
.345								-.4502
.390		-.0611						
.400				-.1050	-.1298		-.3500	
.402			-.0822					
.503								-.3671
.550				-.0872	-.1022			
.565			-.2928					
.600							-.1580	
.637		-.0606						
.650						-.1417		
.670								-.4517
.700					-.1499			
.725				-.1363				
.750						-.3024	-.2931	
.760			-.1560					
.775				-.2949	-.2619			
.799		-.1423						
.808			-.3024					
.834	-.1586							
.839		-.2980						
.850				-.3562	-.2529	-.3563		
.857			-.3345					
.862								-.4383
.855	-.2959							
.879		-.3041						
.900	-.2350			-.3940			-.3788	
.905			-.3840					
.919		-.3189						
.950				-.4062	-.3920	-.3799		
.953			-.3371					
.955		-.3347						
.965	-.3901							
1.000			-.1452		-.2275		-.1353	

```
                                AMES 11-073(OA148) -140A/B/C/R ORB LEFT WING BOT                (XEBL52)

ALPHA ( 2) =    -.027    BETA  ( 1) =   -3.878   MACH   =  1.3971     Q      =  600.78     P      =  439.70     RN/L   =  2.9154

 SECTION ( 1)LEFT WING BOT SURF              DEPENDENT VARIABLE CP

2Y/BW        .2930     .3640     .4270     .5340     .6730     .7800     .8870     .9720

  X/CW
    .010    -.0020     .0158     .2064    -.0834    -.1739    -.1031    -.0190
    .020     .0000    -.0154     .1494    -.2165    -.2301    -.2377    -.2542    -.2178
    .040              -.0156     .0112
    .050    -.0257                        -.2265    -.2370    -.2637    -.2693
    .069                                                                          -.2426
    .080                                  -.1783
    .081                        -.0364
    .086               .0269
    .094    -.0459
    .150                                  -.1192    -.1819    -.1959    -.2189
    .157                                                                          -.1854
    .163               .1017
    .177                        -.0397
    .229    -.0388
    .246              -.0151
    .250                                  -.0592    -.1307    -.1579    -.1847
    .274                        -.0430
    .345                                                                          -.1487
    .390              -.0340
    .400                                  -.0592    -.0456              -.1448
    .402                        -.0435
    .503                                                                          -.1716
    .550                                  -.0335    -.0439
    .565                        -.3575
    .609                                                                -.1138
    .637              -.0196
    .650                                                      -.0743
    .670                                                                          -.2941
    .700                                            -.1092
    .725                                  -.0897
    .750                                                      -.2543    -.2532
    .760                        -.1142
    .775                                  -.2525    -.2781
    .798              -.0987
    .808                        -.2592
    .834    -.1233
    .839              -.2923
    .850                                  -.3307    -.2223    -.3308
    .857                        -.3090
    .862                                                                          -.3314
    .865    -.2784
    .879              -.3000
    .900    -.1722                        -.3734                        -.3706
    .905                        -.3804
    .919              -.2955
```

AMES 11-073(OA148) -140A/B/C/R ORB LEFT WING BOT (XEBL52)

ALPHA (2) = -.027 BETA (1) = -3.878

SECTION (1)LEFT WING BOT SURF DEPENDENT VARIABLE CP

2Y/BW	.2990	.3640	.4270	.5340	.6730	.7800	.8870	.9720
X/CW								
.950				-.3838	-.3117	-.3879		
.953			-.2380					
.955		-.2857						
.965	-.2871							
1.000			-.0951		-.2228		-.3682	

ALPHA (2) = -.013 BETA (2) = .172 MACH = 1.3971 Q = 603.78 P = 439.70 RN/L = 2.9154

SECTION (1)LEFT WING BOT SURF DEPENDENT VARIABLE CP

2Y/BW	.2990	.3640	.4270	.5340	.6730	.7800	.8870	.9720
X/CW								
.010	-.0060	.0049	.2443	-.0785	-.1956	-.1359	-.0657	
.020	.0000	-.0017	.2215	-.1855	-.2255	-.2540	-.2805	-.2464
.040		.0087	.0726					
.050	-.0184			-.1122	-.1936	-.2654	-.2913	
.063								-.2584
.080				-.1085				
.081			.0068					
.086		.0493						
.094	-.0354							
.150				-.0790	-.1347	-.1779	-.2143	
.157								-.1847
.163		.1239						
.177			-.0100					
.229	-.0331							
.246		.0134						
.250				-.0339	-.0503	-.1132	-.1843	
.274			-.0102					
.345								-.1170
.390		-.0040						
.400				-.0304	-.0335		-.0636	
.402			-.0222					
.503								-.0942
.550				-.0162	-.0259			
.565			-.3629					
.600							-.0744	
.637		-.0014						
.640						-.0593		
.670								-.2680
.700					-.0926			
[illegible]				-.0783				
.750						-.2588	-.2495	
.760			-.1031					

```
                                   AMES 11-073(OA148) -140A/B/C/R ORB LEFT WING BOT               (XEBL52)

ALPHA ( 2) =    -.013    BETA  ( 2) =      .172

 SECTION ( 1)LEFT WING BOT SURF              DEPENDENT VARIABLE CP

2Y/BW        .2990   .3640   .4270   .5340   .6730   .7800   .8870   .9720

  X/CW
    .775                             -.2485  -.2685
    .798            -.0980
    .809                    -.2388
    .834   -.1067
    .839            -.2728
    .850                             -.3215  -.2063  -.3216
    .857                    -.3015
    .862                                                             -.3275
    .865   -.2640
    .879            -.2752
    .900   -.1651                    -.3631                  -.3699
    .905                    -.3645
    .919            -.2735
    .950                             -.3867  -.3342  -.3788
    .953                    -.3614
    .955            -.2894
    .965   -.3152
   1.000                    -.1130           -.1980          -.3255
ALPHA ( 2) =    -.015    BETA  ( 3) =    4.247   MACH   =  1.3971     Q      =  600.78     P      =  439.70     RN/L   =  2.9154

 SECTION ( 1)LEFT WING BOT SURF              DEPENDENT VARIABLE CP

2Y/BW        .2990   .3640   .4270   .5340   .6730   .7800   .8870   .9720

  X/CW
    .010   -.0707  -.0608   .2657  -.0277  -.1756  -.1558  -.0942
    .020    .0000  -.0356   .2499  -.0192  -.1159  -.2452  -.2905  -.1937
    .040           -.0167   .1173
    .050   -.0521                    -.0781  -.1827  -.2294  -.2876
    .069                                                             -.1842
    .080                             -.0591
    .081                    .0430
    .086             .0443
    .094   -.0482
    .150                             -.0390  -.0768  -.1307  -.1998
    .157                                                             -.1684
    .163             .1205
    .177                    .0079
    .229   -.0439
    .246             .0255
    .250                             -.0152  -.0404  -.0415  -.0700
    .274                    .0126
    .345                                                             -.0610
    .390             .0148
```

AMES 11-073(OA148) -140A/B/C/R ORB LEFT WING BOT (XEBL52)

ALPHA (2) = -.015 BETA (3) = 4.247

SECTION (1)LEFT WING BOT SURF DEPENDENT VARIABLE CP

2Y/BW	.2990	.3640	.4270	.5340	.6730	.7800	.8870	.9720
X/CW								
.400				-.0077	-.0118		-.0511	
.402			-.0006					
.503								-.0953
.550				-.0054	-.0076			
.565			-.3354					
.600							-.0608	
.637		.0085						
.650						-.0425		
.670								-.2921
.700					-.0820			
.725				-.0720				
.750						-.2582	-.2375	
.760			-.0972					
.775				-.2452	-.2573			
.798		-.0992						
.808			-.2376					
.834	-.1041							
.839		-.2591						
.850				-.3127	-.2066	-.3148		
.857			-.2960					
.862								-.3333
.865	-.2592							
.879		-.2652						
.900	-.1760			-.3547			-.3673	
.905			-.3519					
.919		-.2645						
.950				-.3915	-.3249	-.3658		
.953			-.3479					
.955		-.2876						
.965	-.3472							
1.000			-.1122		-.2023		-.2394	

ALPHA (3) = 3.910 BETA (1) = -3.886 MACH = 1.3964 Q = 600.16 P = 439.71 RN/L = 2.9092

SECTION (1)LEFT WING BOT SURF DEPENDENT VARIABLE CP

2Y/BW	.2990	.3640	.4270	.5340	.6730	.7800	.8870	.9720
X/CW								
.010	.0602	.0184	.3950	.2552	.1812	.1774	.2122	
.020	.0000	.0381	.3756	.1806	.1660	.0883	.0319	.0933
.040		.0539	.2089					
.050	.0498			.0521	.0217	.0218	.0283	
.069								.0595
.080				.0542				

AMES 11-073(OA148) -140A/B/C/R ORB LEFT WING BOT (XEBL52)

ALPHA (3) = 3.510 BETA (1) = -3.886

SECTION (1)LEFT WING BOT SURF DEPENDENT VARIABLE CP

2Y/BW	.2990	.3640	.4270	.5340	.6730	.7800	.8870	.9720
X/CW								
.081			.1269					
.086		.1098						
.094	.0295							
.150				.0521	.0604	.0701	.0782	
.157								-.0613
.163		.2001						
.177			.0891					
.229	.0257							
.246		.0778						
.250				.0745	.0736	.0902	.0671	
.274			.0725					
.345								.0349
.390		.0728						
.400				.0681	.0819		.0628	
.402			.0664					
.503								-.0055
.550				.0729	.0886			
.565			-.4001					
.600							.0124	
.637		.0634						
.650						.0296		
.670								-.2347
.700					-.0140			
.725				-.0059				
.750						-.1982	-.1818	
.760			-.0476					
.775				-.2089	-.2210			
.798		-.0461						
.808			-.1873					
.834	-.0635							
.839		-.2498						
.850				-.2776	-.2631	-.2709		
.857			-.2651					
.862								-.2953
.865	-.2283							
.879		-.2562						
.900	-.1160			-.3334			-.3262	
.905			-.3339					
.919		-.2654						
.950				-.3690	-.2693	-.3474		
.953			-.3490					
.955		-.2432						
.965	-.2460							
1.000			-.0906		-.2167		-.3859	

REPRODUCIBILITY OF THE
ORIGINAL PAGE IS POOR

AMES 11-073(OA148) -140A/B/C/R ORB LEFT WING BOT (XEBL52)

ALPHA (3) = 3.912 BETA (2) = .174 MACH = 1.3964 Q = 600.16 P = 439.71 RN/L = 2.9092

SECTION (1)LEFT WING BOT SURF DEPENDENT VARIABLE CP

2Y/BW	.2990	.3640	.4270	.5340	.6730	.7800	.8870	.9720
X/CW								
.010	-.0300	-.1414	.3467	.3012	.1983	.1853	.1992	
.020	.0000	-.0552	.3479	.2189	.1723	.1102	.0481	.0649
.040		-.0273	.2253					
.050	.0178			.1027	.0519	.0842	.0443	
.069								.0398
.080				.0934				
.081			.1451					
.085		.0660						
.094	.0078							
.150				.0751	.0831	.0908	.1063	
.157								-.0730
.163		.1807						
.177			.0955					
.223	.0087							
.246		.0867						
.253				.0912	.0850	.0941	.0703	
.274			.0918					
.345								.0086
.390		.0820						
.400				.0760	.0949		.0642	
.402			.0721					
.503								.0216
.550				.0803	.0904			
.565			-.4119					
.600							.0159	
.637		.0742						
.650						.0319		
.670								-.2578
.700					-.0150			
.725				-.0036				
.750						-.2172	-.1794	
.760			-.0360					
.775				-.1963	-.2118			
.798		-.0392						
.808			-.1765					
.834	-.0463							
.839		-.2253						
.850				-.2713	-.2456	-.2777		
.857			-.2596					
.862								-.3334
.865	-.2155							
.879		-.2399						
.900	-.1276			-.3138			-.3293	
.905			-.3194					
.919		-.2333						

AMES 11-073(OA148) -140A/B/C/R ORB LEFT WING BOT (XE8L52)

ALPHA (3) = 3.912 BETA (2) = .174

SECTION (1)LEFT WING BOT SURF DEPENDENT VARIABLE CP

2Y/BW	.2990	.3640	.4270	.5340	.6730	.7800	.8870	.9720
X/CW								
.950				-.3623	-.2659	-.3504		
.953			-.3336					
.955		-.2331						
.965	-.2651							
1.000			-.0955		-.1886		-.3565	

ALPHA (3) = 3.916 BETA (3) = 4.236 MACH = 1.3964 Q = 600.16 P = 439.71 RN/L = 2.9092

SECTION (1)LEFT WING BOT SURF DEPENDENT VARIABLE CP

2Y/BW	.2990	.3640	.4270	.5340	.6730	.7800	.8870	.9720
X/CW								
.010	-.1572	-.3711	.2667	.3382	.2368	.2157	.2342	
.020	.0000	-.1852	.3015	.2698	.2079	.1556	.1179	.0022
.040		-.1413	.2330					
.050	-.0479			.1550	.1035	.1135	.1094	
.060								.0019
.080				.1325				
.081			.1508					
.086		-.0084						
.094	-.0391							
.150				.0918	.1152	.1187	.1251	
.157								-.0899
.163		.1453						
.177			.1055					
.229	-.0197							
.246		.0835						
.250				.0999	.0996	.1024	.0798	
.274			.1081					
.345								-.0055
.390		.0904						
.400				.0971	.1199		.0829	
.402			.0904					
.503								-.0254
.550				.0866	.0930			
.565			-.3906					
.600							.0255	
.637		.0842						
.650						.0408		
.670								-.2788
.700					-.0086			
.725				.0036				
.750						-.2200	-.1795	
.760			-.0290					

AMES 11-073(OA148) -140A/B/C/R ORB LEFT WING BOT (XE8L52)

ALPHA (3) = 3.916 BETA (3) = 4.236

SECTION (1)LEFT WING BOT SURF DEPENDENT VARIABLE CP

2Y/BW	.2990	.3640	.4270	.5340	.6730	.7800	.8870	.9720
X/CW								
.775				-.1839	-.1979			
.798		-.0389						
.808			-.1777					
.834	-.0412							
.839		-.2055						
.850				-.2612	-.2345	-.2745		
.857			-.2458					
.862								-.3635
.865	-.2104							
.879		-.2276						
.900	-.1250			-.3032			-.3261	
.905			-.3087					
.919		-.2149						
.950				-.3598	-.2600	-.3477		
.953			-.3030					
.955		-.2323						
.965	-.2757							
1.000			-.1049		-.1667		-.2319	

ALPHA (4) = 7.922 BETA (1) = -3.876 MACH = 1.3965 Q = 599.65 P = 439.24 RN/L = 2.9107

SECTION (1)LEFT WING BOT SURF DEPENDENT VARIABLE CP

2Y/BW	.2990	.3640	.4270	.5340	.6730	.7800	.8870	.9720
X/CW								
.010	.0203	-.1096	.4384	.5174	.4592	.5209	.5386	
.020	.0000	.0128	.4597	.3967	.4035	.4103	.4019	.1446
.040		.0482	.3476					
.050	.0887			.2827	.2777	.3165	.3607	
.069								.1604
.080				.2449				
.08'			.2602					
.086		.1581						
.094	.0824							
.150				.1993	.2561	.2881	.2938	
.157								-.0278
.163		.2928						
.177			.2037					
.229	.0885							
.246		.1742						
.250				.2105	.2256	.2502	.2260	
.274			.1971					
.345								.1305
.390		.1810						

AMES 11-073(OA148) -140A/B/C/R ORB LEFT WING BOT (XEBL52)

ALPHA (4) = 7.922 BETA (1) = -3.876

SECTION (1)LEFT WING BOT SURF DEPENDENT VARIABLE CP

2Y/BW	.2990	.3640	.4270	.5340	.6730	.7800	.8870	.9720
X/CW								
.400				.1991	.2533		.2054	
.402			.1777					
.503								.0961
.550				.1853	.2017			
.555			-.4211					
.600							.1280	
.637		.1640						
.650						.1472		
.670								-.1931
.700					.0662			
.725				.0745				
.750						-.1509	-.1088	
.760			.0339					
.775				-.1549	-.1563			
.798		.0237						
.808			-.1133					
.834	.0072							
.839		-.1941						
.850				-.2219	-.2470	-.2208		
.857			-.2136					
.862								-.2852
.865	-.1762							
.879		-.1927						
.900	-.1110			-.2782			-.2701	
.905			-.2781					
.919		-.2380						
.950				-.3296	-.3126	-.3042		
.953			-.3010					
.955		-.1882						
.965	-.1507							
1.000			-.0828		-.2491		-.3437	

ALPHA (4) = 7.930 BETA (2) = .169 MACH = 1.3965 Q = 599.65 P = 439.24 RN/L = 2.9107

SECTION (1)LEFT WING BOT SURF DEPENDENT VARIABLE CP

2Y/BW	.2990	.3640	.4270	.5340	.6730	.7800	.8870	.9720
X/CW								
.010	-.1250	-.3311	.2912	.5282	.4712	.5315	.5332	
.020	.0000	-.1191	.3643	.4221	.4166	.4373	.4187	.0303
.040		-.0694	.3284					
.050	.0246			.3176	.2960	.3300	.3708	
.069								.0701
.080				.2727				

```
                                 AMES 11-073(OA148) -140A/B/C/R ORB LEFT WING BOT             (XE8L52)
ALPHA ( 4) =    7.930    BETA  ( 2) =     .169

 SECTION ( 1)LEFT WING BOT SURF            DEPENDENT VARIABLE CP

2Y/BW       .2990   .3640   .4270   .5340   .6730   .7800   .8870   .9720

  X/CW
    .081                    .2484
    .086            .0783
    .094    .0408
    .150                            .2115   .2625   .2867   .2924
    .157                                                            -.0453
    .163            .2413
    .177                    .1992
    .229    .0611
    .246            .1677
    .250                            .2100   .2317   .2483   .2215
    .274                    .2022
    .345                                                             .0946
    .390            .1765
    .400                            .1969   .2462           .2170
    .402                    .1807
    .503                                                             .0558
    .550                            .1830   .1995
    .565                   -.4434
    .600                                                    .1142
    .637            .1677
    .650                                            .1408
    .670                                                            -.2273
    .700                                    .0682
    .725                            .0745
    .750                                           -.1609  -.1214
    .760                    .0435
    .775                           -.1342  -.1450
    .798            .0305
    .808                   -.1053
    .834    .0299
    .839           -.1618
    .850                           -.2178  -.2493  -.2274
    .857                   -.2052
    .862                                                            -.3175
    .865   -.1597
    .879           -.1829
    .900   -.0906                  -.2602                  -.2859
    .905                   -.2594
    .919           -.1937
    .950                           -.3246  -.2995  -.3191
    .953                   -.2847
    .955           -.1810
    .965   -.1379
   1.000                   -.1032          -.2232          -.3556
```

AMES 11-073(OA148) -140A/B/C/R ORB LEFT WING BOT (XEBL52)

ALPHA (4) = 7.931 BETA (3) = 4.235 MACH = 1.3965 Q = 599.65 P = 439.24 RN/L = 2.9107

SECTION (1)LEFT WING BOT SURF DEPENDENT VARIABLE CP

2Y/BW	.2990	.3640	.4270	.5340	.6730	.7800	.8870	.9720
X/CW								
.010	-.2822	-.4255	.1054	.4870	.4586	.5107	.5062	
.020	.0000	-.2180	.2208	.4192	.4195	.4390	.4240	-.0967
.040		-.1627	.2569					
.050	-.0509			.3204	.3103	.3333	.3703	
.069								-.0194
.080				.2651				
.091			.2026					
.088		.0047						
.094	-.0140							
.150				.2097	.2654	.2810	.2912	
.157								-.0755
.163		.1766						
.177			.1748					
.229	.0264							
.246		.1329						
.250				.2009	.2316	.2425	.2328	
.274			.1870					
.345								.0451
.390		.1565						
.400				.1976	.2394		.2245	
.402			.1767					
.503								.0144
.550				.1798	.1948			
.565			-.4290					
.600							.1029	
.637		.1700						
.650						.1441		
.670								-.2553
.700					.0744			
.725				.0782				
.750						-.1537	-.1225	
.760			.0423					
.775				-.1164	-.1332			
.798		.0275						
.808			-.1142					
.834	.0285							
.839		-.1461						
.850				-.2081	-.2406	-.2227		
.857			-.1876					
.862								-.3337
.865	-.1557							
.879		-.1770						
.900	-.0950			-.2577			-.2796	
.905			-.2579					
.919		-.1770						

AMES 11-073(OA148) -140A/B/C/R ORB LEFT WING BOT (XEBL52)

ALPHA (4) = 7.931 BETA (3) = 4.235

SECTION (1)LEFT WING BOT SURF DEPENDENT VARIABLE CP

2Y/BW X/CW	.2990	.3640	.4270	.5340	.6730	.7800	.8870	.9720
.950				-.3192	-.2836	-.3154		
.953			-.2541					
.955		-.1881						
.955	-.1614							
1.000			-.1411		-.1869		-.3375	

ALPHA (5) = 11.858 BETA (1) = -3.866 MACH = 1.3951 Q = 600.34 P = 440.65 RN/L = 2.8166

SECTION (1)LEFT WING BOT SURF DEPENDENT VARIABLE CP

2Y/BW X/CW	.2990	.3640	.4270	.5340	.6730	.7800	.8870	.9720
.010	-.1048	-.2714	.3796	.6805	.6529	.7246	.7248	
.020	.0000	-.0298	.4829	.5675	.6010	.6292	.6418	.0831
.040		.0274	.4583					
.050	.1074			.4689	.4849	.5159	.5529	
.069								.1548
.080				.4032				
.081			.3791					
.086		.1882						
.094	.1287							
.150				.3459	.4168	.4459	.4405	
.157								.0058
.163		.3650						
.177			.3207					
.229	.1561							
.246		.2681						
.250				.3377	.3743	.4005	.3765	
.274			.3193					
.345								.1806
.390		.2905						
.400				.3207	.3828		.3531	
.402			.2995					
.503								.1574
.550				.2859	.3087			
.565			-.4429					
.600							.2167	
.637		.2566						
.650						.2417		
.670								-.1547
.700					.1559			
.725				.1629				
.750						-.0814	.0385	
.760			.1224					

AMES 11-073(OA148) -140A/B/C/R ORB LEFT WING BOT (XEBL52)

ALPHA (5) = 11.858 BETA (1) = -3.866

SECTION (1)LEFT WING BOT SURF DEPENDENT VARIABLE CP

2Y/BW	.2990	.3640	.4270	.5340	.6730	.7800	.8870	.9720
X/CW								
.775				-.0876	-.0715			
.798		.1136						
.808			-.0436					
.834	.0957							
.839		-.1247						
.850				-.1622	-.1900	-.1616		
.857			-.1633					
.862								T.2380
.865	-.1130							
.879		-.1282						
.900	-.0116			-.2101			-.2170	
.905			-.2157					
.919		-.1569						
.950				-.2840	-.2657	-.2567		
.953			-.2461					
.955		-.1230						
.965	-.0767							
1.000			-.2406		-.2817		-.4170	

ALPHA (5) = 11.867 BETA (2) = .167 MACH = 1.3951 Q = 600.34 P = 440.65 RN/L = 2.9156

SECTION (1)LEFT WING BOT SURF DEPENDENT VARIABLE CP

2Y/BW	.2990	.3640	.4270	.5340	.6730	.7800	.8870	.9720
X/CW								
.010	-.2375	-.3727	.2011	.6266	.6139	.6695	.6672	
.020	.0000	-.1321	.3344	.5482	.5765	.6031	.6113	-.0639
.040		-.0721	.3800					
.050	.0291			.4563	.4769	.5038	.5382	
.069								.0518
.080				.3926				
.081			.3221					
.086		.1137						
.094	.0748							
.150				.3393	.4048	.4286	.4365	
.157								-.0360
.163		.3023						
.177			.2966					
.229	.1178							
.246		.2404						
.250				.3231	.3625	.3922	.3702	
.274			.3049					
.345								.1256
.390		.2789						

REPROD

```
                         AMES 11-073(OA148) -140A/B/C/R ORB LEFT WING BOT           (XE8L52)
ALPHA ( 5) =    11.867    BETA  ( 2) =      .167
 SECTION ( 1)LEFT WING BOT SURF             DEPENDENT VARIABLE CP

2Y/BW       .2990    .3640    .4270    .5340    .6730    .7800    .8870    .9720

  X/CW
    .400                               .3153    .3698             .3343
    .402                      .2907
    .503                                                                   .1055
    .550                               .2851    .3026
    .565                     -.4582
    .600                                                          .1885
    .637             .2642
    .650                                                 .2316
    .670                                                                  -.1961
    .700                                        .1449
    .725                               .1611
    .750                                                -.0928   -.0578
    .760                      .1300
    .775                              -.0703   -.0709
    .798             .1111
    .808                     -.0425
    .834    .1056
    .839            -.0902
    .850                              -.1574   -.2032   -.1687
    .857                     -.1361
    .862                                                                  -.2794
    .865   -.1026
    .879            -.1178
    .900   -.0235                     -.2021                     -.2302
    .905                     -.1982
    .919            -.1320
    .950                              -.2769   -.2624   -.2756
    .953                     -.2226
    .955            -.1391
    .965   -.0728
   1.000                     -.2218            -.2693            -.4418
ALPHA ( 5) =    11.665    BETA  ( 3) =    4.2 9   MACH  =  1.3951    Q     =  600.34    P     =  440.65    RN/L   =  2.9166
 SECTION ( 1)LEFT WING BOT SURF             DEPENDENT VARIABLE CP

2Y/BW       .2990    .3640    .4270    .5340    .6730    .7800    .8870    .9720

  X/CW
    .010   -.3405   -.4325    .0050    .5347    .5503    .5750    .5833
    .020    .0000   -.2307    .1801    .5025    .5277    .5523    .5578   -.1929
    .040            -.1652    .2903
    .050   -.0433                      .4250    .4489    .4663    .4998
    .060                                                                  -.0473
    .080                               .3691
```

AMES 11-073(OA148) -140A/B/C/R ORB LEFT WING BOT (XEBL52)

ALPHA (5) = 11.865 BETA (3) = 4.248

SECTION (1)LEFT WING BOT SURF DEPENDENT VARIABLE CP

2Y/BW	.2990	.3640	.4270	.5340	.6730	.7800	.8870	.9720
X/CW								
.081			.2555					
.086		.0296						
.094	.0236							
.150				.3229	.3747	.4166	.4256	
.157								-.0757
.163		.2317						
.177			.2513					
.229	.0782							
.246		.1960						
.250				.3005	.3418	.3816	.3593	
.274			.2773					
.345								.0801
.390		.2406						
.400				.3028	.3572		.3217	
.422			.2766					
.503								.0713
.550				.2734	.2933			
.565			-.4323					
.600							.1749	
.637		.2562						
.650						.2204		
.570								-.2134
.700					.1437			
.725				.1532				
.750						-.1096	-.0738	
.760			.1154					
.775				-.0560	-.0795			
.798		.0925						
.808			-.0513					
.834	.0988							
.839		-.0880						
.850				-.1481	-.2043	-.1619		
.857			-.1238					
.862								-.2997
.865	-.1081							
.879		-.1154						
.900	-.0497			-.2054			-.2334	
.905			-.2021					
.919		-.1249						
.950				-.2662	-.2556	-.2739		
.953			-.1959					
.955		-.1508						
.965	-.1126							
1.000			-.2787		-.1797		-.4445	

```
                                AMES 11-073(OA148) -140A/B/C/R ORB LEFT WING BOT            (XEBL52)
ALPHA ( 6) =    15.826   BETA  ( 1) =   -3.845  MACH   =  1.3947     Q      =  600.64     P      =  441.12     RN/L   =  2.9102
 SECTION ( 1)LEFT WING BOT SURF            DEPENDENT VARIABLE CP

2Y/BW       .2990    .3640    .4270    .5340    .6730    .7800    .8870    .9720

  X/CW
    .010   -.1942   -.3104    .3015    .7652    .7788    .8051    .8000
    .020    .0000   -.0394    .4651    .6999    .7396    .7662    .7723   -.0079
    .040             .0300    .5222
    .050    .1204                      .6100    .6463    .6773    .7051
    .069                                                                  .1408
    .080                               .5469
    .081                      .4667
    .086             .2292
    .094    .1768
    .150                               .4984    .5523    .6017    .5798
    .157                                                                  .0093
    .163             .4450
    .177                      .4320
    .229    .2278
    .246             .3628
    .250                               .4603    .5169    .5561    .5029
    .274                      .4375
    .345                                                                  .2405
    .390             .4100
    .400                               .4565    .5124             .4646
    .402                      .4169
    .503                                                                  .2171
    .550                               .4103    .4129
    .555                     -.4696
    .600                                                          .2940
    .637             .3732
    .650                                                 .3270
    .670                                                                 -.1193
    .700                                        .2403
    .725                               .2566
    .750                                                -.0270    .0162
    .760                      .2162
    .775                              -.0063   -.0141
    .798             .2056
    .808                      .0314
    .834    .1968
    .839            -.0490
    .850                              -.1070   -.1436   -.1001
    .857                     -.1013
    .862                                                                 -.2109
    .865   -.0495
    .879            -.0607
    .900   -.0230                     -.1566                     -.1692
    .905                     -.1481
    .919            -.1354
```

```
                                           AMES 11-073(OA148) -140A/B/C/R ORB LEFT WING BOT              (XEBL52)

ALPHA ( 6) =   15.826    BETA  ( 1) =   -3.845

 SECTION ( 1)LEFT WING BOT SURF               DEPENDENT VARIABLE CP

2Y/BW        .2930   .3640   .4270   .5340   .6730   .7800   .8870   .9720

  X/CW
    .950                             -.2353  -.2174  -.2137
    .953                     -.1967
    .955             -.1182
    .965    -.0467
   1.000                     -.2434          -.3550          -.5136

ALPHA ( 6) =   15.841    BETA  ( 2) =     .165   MACH   =  1.3947     Q      =  600.64     P      =  441.12     RN/L   =  2.3102

 SECTION ( 1)LEFT WING BOT SURF               DEPENDENT VARIABLE CP

2Y/BW        .2990   .3640   .4270   .5340   .6730   .7800   .8870   .9720

  X/CW
    .010    -.2978  -.3933   .1098   .6588   .6890   .6966   .6810
    .020     .0000  -.1471   .3052   .6347   .6822   .7002   .6976  -.1424
    .040            -.0775   .4345
    .050     .0552                   .5693   .6171   .6329   .6572
    .069                                                              .0262
    .080                             .5138
    .081                     .3915
    .086             .1416
    .094     .1127
    .150                             .4651   .5303   .5727   .5447
    .157                                                             -.0395
    .163             .3711
    .177                     .3993
    .209     .1807
    .246             .3244
    .250                             .4437   .4944   .5330   .4705
    .274                     .4180
    .345                                                              .1858
    .390             .3856
    .400                             .4390   .4930           .4323
    .402                     .4092
    .503                                                              .1673
    .550                             .4087   .4040
    .565                    -.4925
    .600                                                     .2665
    .637             .3713
    .650                                             .3093
    .670                                                             -.1503
    .700                                     .2460
    .725                             .2583
    .750                                            -.0392  -.0052
    .760                     .2230
```

AMES 11-073(OA148) -140A/B/C/R ORB LEFT WING BOT (XEBL52)

ALPHA (6) = 15.841 BETA (2) = .165

SECTION (1)LEFT WING BOT SURF DEPENDENT VARIABLE CP

2Y/BW	.2930	.3640	.4270	.5340	.6730	.7800	.8870	.9720
X/CW								
.775				.0136	-.0126			
.798		.2000						
.808			.0298					
.834	.1991							
.839		-.0233						
.850				-.0976	-.1642	-.0994		
.857			-.0782					
.862								-.2456
.865	-.0447							
.879		-.0631						
.900	.0077			-.1545			-.1797	
.905			-.1501					
.919		-.0888						
.950				-.2344	-.2285	-.2344		
.953			-.1706					
.955		-.1093						
.985	-.0584							
1.000			-.3463		-.3203		-.5381	

ALPHA (6) = 15.833 BETA (3) = 4.274 MACH = 1.3947 Q = 600.64 P = 441.12 RN/L = 2 9102

SECTION (1)LEFT WING BOT SURF DEPENDENT VARIABLE CP

2Y/BW	.2990	.3640	.4270	.5340	.6730	.7800	.8870	.9720
X/CW								
.010	-.3715	-.4630	-.0773	.5391	.5823	.5719	.5551	
.020	.0000	-.2377	.1509	.5548	.6012	.6262	.6083	-.2414
.040		-.1691	.3249					
.050	-.0191			.5088	.5620	.5806	.6015	
.069								-.0548
.080				.4655				
.081			.3202					
.086		.0676						
.134	.0555							
.150				.4293	.4953	.5400	.5152	
.157								-.0806
.163		.3013						
.177			.3453					
.229	.1322							
.246		.2723						
.250				.4142	.4688	.5040	.4610	
.274			.3911					
.345								.1420
.390		.3523						

AMES 11-073(OA148) -140A/B/C/R ORB LEFT WING BOT (XEBL52)

ALPHA (6) = 15.833 BETA (3) = 4.274

SECTION (1)LEFT WING BOT SURF DEPENDENT VARIABLE CP

2Y/BW X/CW	.2990	.3640	.4270	.5340	.6730	.7800	.8870	.9720
.400				.4224	.4622		.4142	
.402			.3880					
.503								.1157
.550				.3862	.3919			
.565			-.4523					
.600							.2454	
.637		.3563						
.650						.2979		
.670								-.1661
.700					.2506			
.725				.2471				
.750						-.0548	-.0175	
.760			.2083					
.775				.0209	-.0152			
.798		.1873						
.808			.0262					
.834	.1932							
.839		-.0150						
.850				-.0821	-.1515	-.1089		
.857			-.0569					
.862								-.2542
.865	-.0388							
.879		-.0469						
.900	.0165			-.1583			-.1766	
.905			-.1420					
.919		-.0672						
.950				-.2129	-.2286	-.2235		
.953			-.1311					
.955		-.1128						
.965	-.0906							
1.000			-.2664		-.2606		-.5010	

```
DATE 10 FEB 76              TABULATED PRESSURE DATA - OA148 ( AMES 11-073-1 )                                              PAGE 2455

                                      AMES 11-073(OA148) -140A/B/C/R ORB LEFT WING BOT                  (XEBL53)    ( 05 AUG 75  )

                 REFERENCE DATA                                                                                PARAMETRIC DATA

SREF   =   2690.0000 SQ.FT.    YMRP   =   1076.6800 IN. XO                                RUDDER =    -10.000   SPDBRK =     55.000
LREF   =    474.8000 IN.       YMRP   =       .0000 IN. YO                                BDFLAP =     16.300   L-ELVN =     -4.000
BREF   =    936.0680 IN.       ZMRP   =    375.0000 IN. ZO                                R-ELVN =      4.000   MACH   =      1.250
SCALE  =       .0300

ALPHA ( 1) =   -4.036    BETA  ( 1) =   -3.860   MACH    =  1.2435     Q      =  597.22     P      =  551.79     RN/L   =  3.0068

 SECTION ( 1)LEFT WING BOT SURF              DEPENDENT VARIABLE CP

2Y/CW         .2930   .3640   .4270   .5340   .6730   .7800   .8870   .9720

  X/CW
    .010     -.2155  -.3056  -.2425  -.4304  -.5266  -.3756  -.3448
    .023      .0000  -.2029  -.3417  -.5736  -.5693  -.5802  -.5719  -.6202
    .040             -.2772  -.4179
    .050     -.1721                  -.6032  -.5973  -.6146  -.6065
    .059                                                             -.6603
    .080                             -.5776
    .091                     -.2895
    .085             -.1643
    .094     -.1613
    .150                             -.5410  -.5441  -.5517  -.5582
    .157                                                             -.4194
    .163             -.0977
    .177                     -.2717
    .229     -.1513
    .245             -.1954
    .250                             -.3139  -.4955  -.5092  -.5238
    .274                     -.2587
    .345                                                             -.5842
    .390             -.2281
    .400                             -.2664  -.4409          -.4721
    .402                     -.2387
    .503                                                             -.5776
    .550                             -.2126  -.2467
    .565                     -.3965
    .600                                                     -.4579
    .637             -.1831
    .650                                             -.3877
    .670                                                             -.6624
    .700                                     -.2773
    .725                             -.2489
    .750                                             -.4502  -.5765
    .760                      .2371
    .775                             -.4117  -.3457
    .779             -.2013
    .808                     -.4418
    .834     -.2348
    .839             -.4062
    .850                             -.4808  -.3727  -.4967
```

```
                                              AMES 11-073(OA148) -140A/B/C/R ORB LEFT WING BOT                (XE8L53)
ALPHA ( 1) =    -4.036     BETA  ( 1) =    -3.850

 SECTION ( 1)LEFT WING BOT SURF                   DEPENDENT VARIABLE CP

2Y/BW        .2990    .3640    .4270    .5340    .6730    .7800    .8870    .9720

  X/CW
   .857                     -.4558
   .862                                                                   -.6679
   .865    -.4191
   .879             -.4059
   .900    -.3062                     -.4898                     -.4593
   .905                     -.5225
   .919             -.4107
   .950                               -.4250   -.5771   -.4589
   .953                     -.2746
   .955             -.3441
   .965    -.4321
  1.000                     -.1887             -.2640            -.3354
ALPHA ( 1) =    -4.029     BETA  ( 2) =      .182   MACH    =  1.2435     Q      =  597.22     P      =  551.79     RN/L    =  3.0068
 SECTION ( 1)LEFT WING BOT SURF                   DEPENDENT VARIABLE CP

2Y/BW        .2990    .3640    .4270    .5340    .6730    .7800    .8870    .9720

  X/CW
   .010    -.1341   -.1471   -.1182   -.4073   -.5389   -.4113   -.3900
   .020     .0000   -.1566   -.1858   -.5567   -.5814   -.6014   -.5983   -.6645
   .040             -.1512   -.2405
   .050    -.1336                     -.5510   -.6028   -.6328   -.6270
   .069                                                                   -.6844
   .080                               -.5163
   .081                     -.2357
   .085             -.0971
   .094    -.1395
   .150                               -.3412   -.5400   -.5646   -.5738
   .157                                                                   -.4341
   .163             -.0430
   .177                     -.2148
   .229    -.1059
   .246             -.1521
   .250                               -.2449   -.4640   -.5112   -.5369
   .274                     -.2039
   .345                                                                   -.6078
   .390             -.1692
   .400                               -.2076   -.2312            -.4776
   .402                     -.1818
   .503                                                                   -.4866
   .550                               -.1713   -.1884
   .565                     -.4226
   .600                                                          -.4315
```

REPRODUCIBILITY OF THE
ORIGINAL PAGE IS POOR

```
                   AMES 11-073(OA148) -140A/B/C/R ORB LEFT WING BOT             (XEBL53)

ALPHA ( 1) =   -4.023    BETA  ( 2) =     .182

 SECTION ( 1)LEFT WING BOT SURF              DEPENDENT VARIABLE CP

2Y/BW          .2990   .3640   .4270   .5340   .6730   .7800   .8870   .9720

  X/CW
    .637              -.1471
    .650                                              -.2192
    .670                                                              -.6558
    .700                                      -.2373
    .725                              -.2259
    .750                                              -.4140  -.4358
    .760                      -.2383
    .775                              -.4056  -.3371
    .798              -.2105
    .808                      -.4243
    .834      -.2289
    .839              -.4086
    .850                              -.4778  -.3683  -.4667
    .857                      -.4528
    .862                                                              -.6867
    .865      -.4035
    .879              -.3984
    .900      -.3283                  -.5094                  -.4980
    .905                      -.5164
    .919              -.4188
    .950                              -.5001  -.5914  -.4782
    .953                      -.3300
    .955              -.4347
    .965      -.4785
   1.000                      -.2329          -.3129          -.1935
ALPHA ( 1) =   -4.033    BETA  ( 3) =    4.271   MACH   =  1.2435    Q      =  597.22     P      =  551.79     RN/L   =  3.0068

 SECTION ( 1)LEFT WING BOT SURF              DEPENDENT VARIABLE CP

2Y/BW          .2990   .3640   .4270   .5340   .6730   .7800   .8870   .9720

  X/CW
    .010      -.1278  -.0584  -.0142  -.3980  -.5315  -.4277  -.4215
    .020       .0000  -.0766  -.0277  -.5277  -.5679  -.6125  -.6122  -.6913
    .040              -.0612  -.1239
    .050      -.1206                  -.4490  -.5805  -.6348  -.6371
    .063                                                              -.6892
    .080                              -.3795
    .081                      -.1554
    .086              -.0387
    .094      -.1127
    .150                              -.2358  -.4692  -.5522  -.5738
    .157                                                              -.4426
    .163               .0117
```

```
                                  AMES 11-073(OA148) -140A/B/C/R ORB LEFT WING BOT            (XEBL53)

ALPHA ( 1) =    -4.033    BETA  ( 3) =     4.271

 SECTION ( 1)LEFT WING BOT SURF              DEPENDENT VARIABLE CP

2Y/BW        .2990    .3640    .4270    .5340    .6730    .7800    .8870    .9720

  X/CW
   .177                       -.1597
   .229    -.0928
   .246             -.0958
   .250                                -.1765   -.2136   -.4099   -.5387
   .274                       -.1377
   .345                                                                    -.6200
   .370             -.1085
   .400                                -.1464   -.1692            -.3959
   .402                       -.1306
   .503                                                                    -.5638
   .550                                -.1326   -.1507
   .565                       -.3784
   .600                                                           -.2032
   .637             -.1239
   .650                                                  -.1912
   .670                                                                    -.4466
   .700                                         -.2167
   .725                                -.2010
   .750                                                  -.3698   -.3973
   .760                       -.2232
   .775                                -.4029   -.3961
   .798             -.2091
   .808                       -.3983
   .834    -.2326
   .839             -.3900
   .850                                -.4658   -.3308   -.4649
   .857                       -.4324
   .862                                                                    -.4642
   .865    -.3996
   .879             -.3916
   .900    -.3255                      -.5127                     -.4789
   .905                       -.4909
   .919             -.4110
   .950                                -.5215   -.5076   -.4877
   .953                       -.4115
   .955             -.4331
   .965    -.4977
  1.000                       -.2203            -.3178            -.2183
```

DATE 10 FEB 76 TABULATED PRESSURE DATA - OA148 (AMES 11-073-1)

AMES 11-073(OA148) -140A/B/C/R ORB LEFT WING BOT (XEBL53)

ALPHA (2) = -.011 BETA (1) = -3.881 MACH = 1.2454 Q = 599.32 P = 552.04 RN/L = 3.0118

SECTION (1)LEFT WING BOT SURF DEPENDENT VARIABLE CP

2Y/BW	.2990	.3640	.4270	.5340	.6730	.7800	.8870	.9720
X/CW								
.010	-.0442	-.0044	.1545	-.1964	-.3146	-.2491	-.1577	
.020	.0000	-.0493	.1016	-.3352	-.3868	-.3840	-.4161	-.3568
.040		-.0476	-.0529					
.050	-.0677			-.2913	-.3847	-.4123	-.4332	
.069								-.3905
.080				-.2509				
.081			-.1066					
.086		-.0002						
.094	-.0612							
.150				-.1985	-.2726	-.3163	-.3530	
.157								-.2774
.163		.0459						
.177			-.1215					
.223	-.0829							
.246		-.0856						
.250				-.1531	-.2063	-.2514	-.3086	
.274			-.1274					
.345								-.2763
.390		-.1102						
.400				-.1373	-.1302		-.2455	
.402			-.1196					
.503								-.2808
.550				-.1078	-.1170			
.565			-.4315					
.600							-.1497	
.637		-.0934						
.640						-.1502		
.670								-.3608
.700					-.1822			
.725				-.1567				
.750						-.3628	-.3688	
.760			-.1704					
.775				-.3543	-.3621			
.798		-.1650						
.808			-.3606					
.834	-.1767							
.839		-.3616						
.850				-.4377	-.3045	-.4331		
.857			-.4003					
.862								-.4361
.865	-.3636							
.879		-.3784						
.900	-.2272			-.4713			-.4855	
.905			-.4735					
.919		-.3653						

AMES 11-073(OA148) -140A/B/C/R ORB LEFT WING BOT (XEBL53)

ALPHA (2) = -.011 BETA (1) = -3.881

SECTION (1)LEFT WING BOT SURF DEPENDENT VARIABLE CP

2Y/BW	.2990	.3640	.4270	.5340	.6730	.7800	.8870	.9720
X/CW								
.950				-.4283	-.4275	-.4916		
.953			-.2618					
.955		-.3579						
.955	-.3725							
1.000			-.1477		-.2835		-.3830	

ALPHA (2) = .001 BETA (2) = .178 MACH = 1.2454 Q = 599.32 P = 552.04 RN/L = 3.0119

SECTION (1)LEFT WING BOT SURF DEPENDENT VARIABLE CP

2Y/BW	.2990	.3640	.4270	.5340	.6730	.7800	.8870	.9720
X/CW								
.010	-.0522	-.0209	.2239	-.1936	-.3293	-.2746	-.2022	
.020	.0000	-.0221	.1923	-.2494	-.3323	-.4024	-.4309	-.3723
.040		-.0171	.0207					
.060	-.0740			-.2031	-.3120	-.3934	-.4380	
.069								-.3614
.080				-.1839				
.081			-.0405					
.086		.0266						
.094	-.0952							
.150				-.1489	-.2268	-.2839	-.3465	
.157								-.2738
.163		.0928						
.177			-.0759					
.229	-.0657							
.246		-.0459						
.250				-.1089	-.1333	-.1371	-.2651	
.274			-.0823					
.345								-.1363
.390		-.0717						
.400				-.0926	-.0975		-.1335	
.402			-.0830					
.503								-.1753
.550				-.0784	-.0838			
.565			-.4730					
.600							-.1408	
.637		-.0608						
.650						-.1244		
.670								-.3729
.700					-.1685			
.725				-.1495				
.750						-.3617	-.3425	
.760			-.1683					

```
                        AMES 11-073(OA148) -140A/B/C/R ORB LEFT WING BOT            (XEBL53)

ALPHA ( 2) =     .001    BETA  ( 2) =     .178

 SECTION ( 1)LEFT WING BOT SURF             DEPENDENT VARIABLE CP

2Y/BW       .2990   .3640   .4270   .5340   .6730   .7800   .8870   .9720

  X/CW
   .775                            -.3567  -.3535
   .798            -.1664
   .808                    -.3441
   .834    -.1822
   .839            -.3724
   .850                            -.4299  -.3049  -.4266
   .857                    -.4089
   .862                                                            -.4199
   .865    -.3699
   .879            -.3620
   .900    -.2521                  -.4752                  -.4755
   .905                    -.4736
   .919            -.3698
   .950                            -.4778  -.4738  -.4756
   .953                    -.3942
   .955            -.3892
   .965    -.4176
  1.000                    -.1709          -.2682          -.2274

ALPHA ( 2) =     .000    BETA  ( 3) =    4.247   MACH   =  1.2454     Q      =  599.32     P      =  552.04     RN/L   =  3.0119

 SECTION ( 1)LEFT WING BOT SURF             DEPENDENT VARIABLE CP

2Y/BW       .2990   .3640   .4270   .5340   .6730   .7800   .8870   .9720

  X/CW
   .010    -.1534  -.0833   .2493  -.0612  -.2641  -.2729  -.2027
   .020     .0000  -.0646   .2250  -.0773  -.1844  -.3480  -.4177  -.2126
   .040            -.0355   .0791
   .050    -.1173                  -.1491  -.2474  -.2852  -.3337
   .060                                                            -.2014
   .080                            -.1190
   .081                    -.0018
   .086             .0288
   .094    -.1038
   .150                            -.1045  -.1145  -.1437  -.1938
   .157                                                            -.1934
   .163             .1032
   .177                    -.0481
   .229    -.0683
   .246            -.0107
   .250                            -.0569  -.0759  -.0890  -.1215
   .274                    -.0370
   .345                                                            -.1267
   .390            -.0362
```

```
                         AMES 11-073(OA148) -140A/B/C/R ORB LEFT WING BOT              (XEBL53)
ALPHA ( 2) =     .000    BETA  ( 3) =    4.247
 SECTION ( 1)LEFT WING BOT SURF              DEPENDENT VARIABLE CP
2Y/BW        .2990    .3640    .4270    .5340    .6730    .7800    .8870    .9720
  X/CW
    .400                               -.0451   -.0292            -.1037
    .402                      -.0386
    .503                                                                   -.1602
    .550                               -.0474   -.0536
    .565                      -.4375
    .600                                                          -.1197
    .637             -.0464
    .650                                                 -.0975
    .670                                                                   -.3943
    .700                                        -.1418
    .725                               -.1334
    .750                                                 -.3541   -.3467
    .760                      -.1656
    .775                               -.3530   -.3360
    .798             -.1599
    .808                      -.3469
    .834    -.1669
    .839             -.3460
    .850                               -.4220   -.2925   -.4240
    .857                      -.3930
    .862                                                                   -.4467
    .865    -.3567
    .879             -.3373
    .900    -.2524                     -.4715                     -.4842
    .905                      -.4514
    .919             -.3491
    .950                               -.4986   -.4827   -.4719
    .953                      -.4377
    .955             -.3826
    .965    -.4478
   1.000                      -.1748            -.2863            -.1986
ALPHA ( 3) =    3.944    BETA  ( 1) =   -3.877   MACH   =  1.2467    Q     =  599.84    P     =  551.34    RN/L   =  3.0121
 SECTION ( 1)LEFT WING BOT SURF              DEPENDENT VARIABLE CP
2Y/BW        .2990    .3640    .4270    .5340    .6730    .7800    .8870    .9720
  X/CW
    .010     .0396   -.0436    .4259    .2266    .1254    .1298    .1592
    .020     .0000   -.0024    .3849    .1216    .1106    .0440   -.0071    .0742
    .040              .0217    .2125
    .050     .0399                       .0416   -.0047    .0295    .0114
    .069                                                                    .0321
    .080                                 .0461
```

DATE 10 FEB 76 TABULATED PRESSURE DATA - OA148 (AMES 11-073-1)

AMES 11-073(OA148) -140A/B/C/R ORB LEFT WING BOT (XEBL53)

ALPHA (3) = 3.944 BETA (1) = -3.377

SECTION (1)LEFT WING BOT SURF DEPENDENT VARIABLE CP

2Y/BW X/CW	.2990	.3640	.4270	.5340	.6730	.7800	.8870	.9720
.081			.1290					
.086		.0957						
.094	.0167							
.150				.0345	.0477	.0674	.0759	
.157								-.0834
.163		.2061						
.177			.0742					
.229	-.0044							
.246		.0753						
.250				.0663	.0615	.0693	.0411	
.274			.0742					
.345								.0086
.330		.0671						
.400				.0725	.0884		.0449	
.402			.0609					
.503								-.0295
.550				.0688	.0757			
.565			-.4682					
.600							-.0086	
.637		.0678						
.650						.0186		
.670								-.3055
.700					-.0455			
.725				-.0278				
.750						-.2907	-.2538	
.760			-.0486					
.775				-.2630	-.2821			
.798		-.0542						
.808			-.2400					
.834	-.0727							
.839		-.2868						
.850				-.3523	-.2452	-.3571		
.857			-.3310					
.862								-.3843
.865	-.2856							
.879		-.2993						
.900	-.1193			-.4056			-.4027	
.905			-.3963					
.919		-.2840						
.950				-.4257	-.3263	-.4348		
.953			-.3436					
.955		-.2882						
.965	-.3139							
1.000			-.0685		-.2196		-.2858	

TABULATED PRESSURE DATA - OA148 (AMES 11-073-1)

AMES 11-073(OA148) -140A/B/C/R ORB LEFT WING BOT (XEBL53)

ALPHA (3) = 3.945 BETA (2) = .180 MACH = 1.2467 Q = 599.84 P = 551.34 RN/L = 3.0121

SECTION (1)LEFT WING BOT SURF DEPENDENT VARIABLE CP

2Y/BW	.2990	.3640	.4270	.5340	.6730	.7800	.8870	.9720
X/CW								
.010	-.0836	-.2219	.3640	.2799	.1557	.1522	.1769	
.020	.0000	-.1035	.3675	.1726	.1318	.0864	.0442	.0256
.040		-.0676	.2489					
.050	-.0195			.1069	.0386	.0646	.0565	
.069								.0013
.070				.0897				
.081			.1511					
.086		.0520						
.094	-.0223							
.150				.0552	.0883	.0902	.0821	
.157								-.0992
.163		.1998						
.177			.0847					
.229	-.0225							
.246		.0892						
.250				.0894	.0805	.0795	.0415	
.274			.0944					
.345								-.0048
.390		.0911						
.400				.0932	.1107		.0698	
.402			.0864					
.503								-.0442
.550				.0835	.0883			
.565			-.5090					
.600							-.0105	
.637		.0659						
.650						.0207		
.670								-.3370
.700					-.0439			
.725				-.0194				
.750						-.3024	-.2526	
.760			-.0476					
.775				-.2578	-.2760			
.798		- 0626						
.808			-.2300					
.834	-.0670							
.839		-.2734						
.850				-.3451	-.2493	-.3566		
.857			-.3264					
.862								-.4112
.865	-.2838							
.879		-.2847						
.900	-.1397			-.3971			-.4124	
.905			-.3885					
.919		-.2727						

```
                                  AMES 11-073(OA148) -1.0A/B/C/R ORB LEFT WING BOT            (XEBL53)

ALPHA ( 3) =    3.945    BETA  ( 2) =     .180

 SECTION ( 1)LEFT WING BOT SURF              DEPENDENT VARIABLE CP

2Y/BW        .2990   .3640   .4270   .5340   .6730   .7800   .8870   .9720

 X/CW
   .950                              -.4437  -.3327  -.4327
   .953                      -.3807
   .955              -.2897
   .965     -.3460
  1.000                      -.0913          -.2017          -.2386

ALPHA ( 3) =    3.949    BETA  ( 3) =    4.232   MACH   =  1.2467    Q     =  599.84    P     =  551.34    RN/L   =  3.0121

 SECTION ( 1)LEFT WING BOT SURF              DEPENDENT VARIABLE CP

2Y/BW        .2990   .3640   .4270   .5340   .6730   .7800   .8870   .9720

 X/CW
   .010     -.2428  -.3713   .2710   .3472   .2106   .2331   .2464
   .030      .0000  -.2147   .3162   .2395   .1790   .1737   .1228  -.0385
   .040             -.1697   .2563
   .050     -.0317                   .1734   .0918   .1126   .1204
   .069                                                              -.0308
   .080                              .1367
   .091                      .1737
   .096              .0125
   .094      .0727
   .150                              .1024   .1233   .1150   .1131
   .157                                                              -.1076
   .163              .1748
   .177                      .1109
   .199     -.0595
   .246              .1015
   .250                              .1110   .1027   .1079   .0756
   .274                      .1197
   .345                                                              -.0444
   .390              .1097
   .405                              .1169   .1439           .0955
   .482                      .1090
   .503                                                              -.0783
   .550                              .0982   .1034
   .565                     -.4613
   .600                                                     -.0132
   .637              .0936
   .650                                              .0245
   .670                                                              -.3710
   .700                                     -.0438
   .725                             -.0169
   .750                                             -.3083  -.2583
   .760                     -.0486
```

AMES 11-073(OA148) -140A/B/C/R ORB LEFT WING BOT (XEBL53)

ALPHA (3) = 3.949 BETA (3) = 4.232

SECTION (1)LEFT WING BOT SURF DEPENDENT VARIABLE CP

2Y/BW	.2990	.3640	.4270	.5340	.6730	.7800	.8870	.9720
X/CW								
.775				-.2540	-.2679			
.793		-.0673						
.808			-.2409					
.834	-.0642							
.839		-.2587						
[illegible]				-.3394	-.2653	-.3614		
.857			-.3062					
.862								-.4499
.865	-.2814							
.873		-.2642						
.900	-.1405			-.3994			-.4342	
.905			-.3739					
.919		-.2587						
[illegible]				-.4563	-.3340	-.4360		
.943			-.3531					
.955		-.2907						
.965	-.3472							
1.000			-.1050		-.2008		-.2036	

ALPHA (4) = 7.975 BETA (1) = -3.876 MACH = 1.2465 Q = 599.91 P = 551.57 RN/L = 3.0143

SECTION (1)LEFT WING BOT SURF DEPENDENT VARIABLE CP

2Y/BW	.2990	.3640	.4270	.5340	.6730	.7800	.8870	.9720
X/CW								
.010	-.0268	-.2307	.4024	.5408	.4789	.5622	.5725	
.020	.0000	-.0590	.4532	.4068	.4175	.4429	.4568	.0889
.040		-.0132	.3710					
.050	.0723			.3117	.3093	.3391	.3794	
.069								.1255
.080				.2517				
.081			.2722					
.096		.1283						
.094	.0650							
.150				.2113	.2758	.2963	.2908	
.157								-.0422
.163		.2920						
.177			.2042					
.229	.0575							
.240		.1763						
.250				.2159	.2332	.2747	.2334	
.274			.2032					
.345								.0818
.390		.1869						

AMES 11-073(OA148) -140A/B/C/R ORB LEFT WING BOT (XE8L53)

ALPHA (4) = 7.975 BETA (1) = -3.876

SECTION (1)LEFT WING BOT SURF DEPENDENT VARIABLE CP

2Y/BW	.2990	.3640	.4270	.5340	.6730	.7800	.8870	.9720
X/CW								
.400				.2151	.2847		.2248	
.402			.1964					
.503								.0446
.550				.1984	.1885			
.565			-.5157					
.600							.0825	
.627		.1713						
.650						.1168		
.670								-.2757
.700					.0311			
.725				.0498				
.750						-.2349	-.1878	
.760			.0246					
.775				-.2087	-.2287			
.788		.0191						
.808			-.1727					
.834	.0071							
.849		-.2340						
.850				-.2979	-.3186	-.3130		
.857			-.2816					
.862								-.3459
.865	-.2292							
.879		-.2492						
.900	-.0836			-.3568			-.3574	
.905			-.3366					
.919		-.2366						
.950				-.4261	-.3794	-.4009		
.953			-.3633					
.955		-.2298						
.965	-.2630							
1.000			-.0817		-.2357		-.3884	

ALPHA (4) = 7.918 BETA (2) = .169 MACH = 1.2465 Q = 599.91 P = 551.57 RN/L = 3.0143

SECTION (1)LEFT WING BOT SURF DEPENDENT VARIABLE CP

2Y/BW	.2990	.3640	.4270	.5340	.6730	.7800	.8870	.9720
X/CW								
.010	-.2090	-.4548	.2356	.5472	.4978	.5553	.5578	
.020	.0000	-.1959	.3433	.4394	.4456	.4524	.4622	-.0386
.040		-.1370	.3299					
.050	-.0159			.3422	.3400	.3504	.3880	
.059								.0233
.080				.2820				

AMES 11-073(OA148) -140A/B/C/R ORB LEFT WING BOT (XEBL53)

ALPHA (4) = 7.918 BETA (2) = .169

SECTION (1)LEFT WING BOT SURF DEPENDENT VARIABLE CP

2Y/BW	.2990	.3640	.4270	.5340	.6730	.7800	.8870	.9720
X/CW								
.081			.2529					
.086		.0404						
.094	.0066							
.150				.2447	.2838	.3072	.2970	
.157								-.0712
.163		.2416						
.177			.2068					
.229	.0326							
.246		.1565						
.250				.2287	.2486	.2850	.2346	
.274			.2189					
.345								.0339
.390		.1987						
.400				.2400	.2914		.2157	
.402			.2125					
.503								.0060
.550				.2089	.1993			
.565			-.5434					
.600							.0734	
.637		.1937						
.650						.1185		
.670								-.3136
.700					.0337			
.725				.0599				
.750						-.2530	-.1989	
.760			.0309					
.775				-.1893	-.2185			
.798		.0189						
.808			-.1646					
.834	.0125							
.849		-.2078						
.850				-.2931	-.3184	-.3054		
.857			-.2676					
.86[illegible]								-.3918
.865	-.2241							
.879		-.2300						
.900	-.0902			-.3475			-.3806	
.905			-.3309					
.919		-.2193						
.950				-.4262	-.3644	-.4107		
.953			-.3233					
.955		-.2267						
.965	-.2359							
1.000			-.1039		-.1682		-.3834	

DATE 10 FEB 76 TABULATED PRESSURE DATA - OA148 (AMES 11-073-1)

AMES 11-073(OA148) -140A/B/C/R ORB.LEFT WING BOT (XEBL53)

ALPHA (4) = 7.882 BETA (3) = 4.233 MACH = 1.2465 Q = 599.91 P = 551.57 RN/L = 3.0143

SECTION (1)LEFT WING BOT SURF DEPENDENT VARIABLE CP

2Y/BW	.2990	.3640	.4270	.5340	.6730	.7800	.8870	.9720
X/CW								
.010	-.3906	-.5247	.0678	.5104	.4796	.5276	.5317	
.020	.0000	-.3021	.2062	.4292	.4363	.4516	.4659	-.1911
.040		-.2374	.2650					
.050	-.1016			.3461	.3472	.3598	.3956	
.069								-.0843
.080				.2855				
.081			.2095					
.086		-.0326						
.094	-.0550							
.150				.2496	.2858	.3189	.3035	
.157								-.1080
.163		.1809						
.177			.2053					
.229	-.0146							
.245		.1325						
.250				.2347	.2804	.2965	.2352	
.274			.2258					
.345								-.0143
.390		.2010						
.400				.2503	.2835		.2052	
.402			.2280					
.503								-.0391
.550				.2024	.1965			
.565			-.4978					
.600							.0563	
.637		.1899						
.650						.1021		
.670								-.3510
.700					.0281			
.725				.0600				
.750						-.2610	-.2153	
.760			.0276					
.775				-.1852	-.2220			
.798		.0058						
.808			-.1732					
.834	.0095							
.839		-.1966						
.850				-.2784	-.3111	-.2969		
.857			-.2448					
.862								-.4398
[illegible]	-.2203							
.879		-.2105						
.900	-.1022			-.3508			-.3906	
.905			-.3197					
.919		-.2117						

```
DATE 10 FEB 76              TABULATED PRESSURE DATA - OA148 ( AMES 11-073-1 )                               PAGE 2470

                                 AMES 11-073(OA148) -140A/B/C/R ORB LEFT WING BOT               (XEBL53)

ALPHA ( 4) =    7.882    BETA  ( 3) =     4.233

 SECTION ( 1)LEFT WING BOT SURF            DEPENDENT VARIABLE CP

2Y/BW          .2990     .3640     .4270     .5340     .6730     .7800     .8870     .9720

  X/CW
    .950                                    -.4139    -.3385    -.4213
    .953                         -.2928
    .955               -.2377
    .965     -.2290
   1.000                         -.1411              -.1806              -.3866
ALPHA ( 5) =   11.916    BETA  ( 1) =    -3.857   MACH   =  1.2482     Q      =  600.48     P      =  550.64     RN/L   =  3.0151

 SECTION ( 1)LEFT WING BOT SURF            DEPENDENT VARIABLE CP

2Y/BW          .2990     .3640     .4270     .5340     .6730     .7800     .8870     .9720

  X/CW
    .010     -.1657    -.3973     .3035     .6964     .6947     .7451     .7351
    .020      .0000    -.1021     .4510     .6051     .6362     .6727     .6705    -.0263
    .040               -.0368     .4680
    .050      .0800                         .4997     .5335     .5698     .5853
    .069                                                                            .0826
    .080                                    .4392
    .081                          .4030
    .086                .1589
    .094      .1076
    .150                                    .3971     .4580     .4946     .4508
    .157                                                                           -.0319
    .163                .3773
    .177                          .3442
    .229      .1281
    .246                .2834
    .250                                    .3763     .4229     .4366     .3781
    .274                          .3394
    .345                                                                            .1336
    .390                .3227
    .400                                    .3744     .4009               .3344
    .402                          .3619
    .503                                                                            .1046
    .550                                    .3036     .2984
    .565                         -.5436
    .600                                                                  .1614
    .637                .2896
    .650                                                        .1909
    .670                                                                           -.2506
    .700                                              .0994
    .725                                    .1297
    .750                                                       -.1847    -.1346
    .760                          .0922
```

```
                        AMES 11-073(OA148) -140A/B/C/R ORB LEFT WING BOT              (XEBL53)

ALPHA ( 5) =   11.916    BETA  ( 1) =    -3.857

 SECTION ( 1)LEFT WING BOT SURF           DEPENDENT VARIABLE CP

2Y/BW        .2990   .3640   .4270   .5340   .6730   .7800   .8870   .9720

  X/CW
    .775                             -.1501  -.1577
    .798             .0857
    .808                     -.1111
    .834     .0697
    .839            -.1878
    .850                             -.2592  -.2784  -.2483
    .857                     -.2385
    .862                                                            -.3340
    .865    -.1860
    .879            -.1963
    .900    -.0423                   -.3046                  -.3119
    .905                     -.2928
    .919            -.1871
    .950                             -.3901  -.3416  -.3606
    .943                     -.3063
    .945            -.1925
    .965    -.1834
   1.000                     -.1588          -.3387          -.4915
ALPHA ( 5) =   11.930    BETA  ( 2) =     .181    MACH   =  1.2482     Q     =   600.48     P     =   550.64     RN/L    =  3.0151

 SECTION ( 1)LEFT WING BOT SURF           DEPENDENT VARIABLE CP

2Y/BW        .2990   .3640   .4270   .5340   .6730   .7800   .8870   .9720

  X/CW
    .010    -.3406  -.4868   .1106   .6235   .6396   .6645   .6463
    .020     .0000  -.2157   .2848   .5679   .6069   .6336   .6237  -.1892
    .040            -.1434   .3687
    .050    -.0104                   .4867   .5269   .5542   .5613
    .069                                                            -.0344
    .080                             .4257
    081                      .3456
    .086             .0707
    .094     .0455
    .150                             .3887   .4570   .4797   .4332
    .157                                                            -.0729
    .163             .3061
    .177                     .3272
    .229     .0882
    .246             .2429
    .250                             .3790   .4151   .4307   .3632
    .274                     .3381
    .345                                                             .0733
    .390             .3254
```

```
                     AMES 11-073(OA148) -140A/B/C/R ORB LEFT WING BOT            (XEBL53)

ALPHA ( 5) =   11.930    BETA  ( 2) =     .181

 SECTION ( 1)LEFT WING BOT SURF              DEPENDENT VARIABLE CP

2Y/BW       .2990   .3640   .4270   .5340   .6730   .7800   .8870   .9720

  X/CW
    .400                            .3672   .3912           .3125
    .402                    .3629
    .503                                                            .0504
    .550                            .2987   .2910
    .565                   -.5616
    .600                                                    .1346
    .637            .2858
    .650                                            .1766
    .670                                                           -.2926
    .700                                    .1139
    .725                            .1328
    .750                                           -.1956  -.1486
    .760                    .0976
    .775                           -.1299  -.1585
    .798            .0781
    .808                   -.1165
    .834    .0736
    .839           -.1594
    .850                           -.2366  -.2873  -.2411
    .857                   -.2174
    .862                                                           -.3815
    .865   -.1819
    .879           -.1796
    .900   -.0407                  -.3060                  -.3283
    .905                   -.2862
    .919           -.1721
    .950                           -.3853  -.3318  -.3780
    .953                   -.2561
    .955           -.1898
    .965   -.1690
   1.000                   -.2579          -.2875          -.5208
ALPHA ( 5) =   11.925    BETA  ( 3) =    4.245   MACH   =  1.2482    Q     =  600.48    P     =  550.64    RN/L   =  3.0151

 SECTION ( 1)LEFT WING BOT SURF              DEPENDENT VARIABLE CP

2Y/BW       .2990   .3640   .4270   .5340   .6730   .7800   .8870   .9720

  X/CW
    .010   -.4589  -.5404  -.0819   .5219   .5662   .5677   .5443
    .020    .0000  -.3252   .1310   .5097   .5608   .5873   .5608  -.3113
    .040           -.2509   .2839
    .050   -.0927                   .4537   .5126   .5250   .5256
    .059                                                           -.1361
    .080                            .4061
```

AMES 11-073(OA148) -140A/B/C/R ORB LEFT WI!.' 3. (XE8L53)

ALPHA (5) = 11.925 BETA (3) = 4.245

SECTION (1)LEFT WING BOT SURF DEPENDENT VARIABLE CP

2Y/BW	.2990	.3640	.4270	.5340	.6730	.7800	.8870	.9720
X/CW								
.081			.2563					
.086		-.0098						
.094	-.0261							
.150				.3804	.4441	.4688	.4129	
.157								-.1198
.163		.2380						
.177			.2993					
.229	.0399							
.246		.1922						
.250				.3745	.4038	.4160	.3444	
.274			.3427					
.345								.0238
.390		.3096						
.400				.3556	.3764		.2911	
.402			.3535					
.503								.0061
.550				.2875	.2794			
.555			-.5093					
.600							.1130	
.637		.2745						
.650						.1650		
.670								-.3116
.700					.1218			
.725				.1260				
.750						-.2062	-.1615	
.760			.0836					
.775				-.1319	-.1607			
.798		.0626						
.808			-.1256					
.834	.0668							
.839		-.1549						
.850				-.2292	-.2914	-.2522		
.857			-.2011					
.862								-.3985
.865	-.1809							
.879		-.1657						
.900	-.0738			-.3068			-.3300	
.905			-.2742					
.913		-.1744						
.950				-.3623	-.3032	-.3760		
.953			-.2506					
.955		-.2067						
.965	-.1677							
1.000			-.2941		-.2603		-.5104	

AMES 11-073(OA148) -140A/B/C/R ORB LEFT WING BOT (XEBL54) (5E AUG 75)

REFERENCE DATA

SREF = 2690.0000 SQ.FT. XMRP = 1076.6800 IN. XO
LREF = 474.8000 IN. YMRP = .0000 IN. YO
BREF = 936.0680 IN. ZMRP = 375.0000 IN. ZO
SCALE = .0300

PARAMETRIC DATA

RUDDER = -10.000 SPDBRK = 55.000
BDFLAP = 16.300 L-ELVN = -4.000
R-ELVN = 4.000 MACH = 1.100

ALPHA (1) = -3.970 BETA (1) = -3.853 MACH = 1.1014 Q = 600.89 P = 707.69 RN/L = 3.1837

SECTION (1)LEFT WING BOT SURF DEPENDENT VARIABLE CP

2Y/BW	.2990	.3640	.4270	.5340	.6730	.7800	.8870	.9720
X/CW								
.010	-.1737	-.3380	-.2886	-.6179	-.7349	-.5574	-.5439	
.020	.0000	-.3142	-.3726	-.7731	-.7785	-.8000	-.8055	-.8321
.040		-.2951	-.4087					
.050	-.1834			-.7241	-.7984	-.8326	-.8336	
.069								-.9211
.080				-.6991				
.091			-.2971					
.085		-.1428						
.094	-.1845							
.150				-.4721	-.6935	-.7325	-.7627	
.157								-.5198
.163		-.0659						
.177			-.2468					
.229	-.1520							
.246		-.1324						
.250				-.2786	-.5686	-.6671	-.6969	
.274			-.1998					
.345								-.8490
.390		-.1435						
.400				-.1621	-.1650		-.6166	
.402			-.1331					
.503								-.8142
.550				-.1265	-.1501			
.565			-.4382					
.600							-.3078	
.637		-.1050						
.650						-.1612		
.670								-.8118
.700					-.2243			
.725				-.2285				
.750						-.4247	-.4228	
.760			-.1623					
.775				-.5128	-.3624			
.798		-.1721						
.808			-.5241					
.834	-.2305							
.839		-.4774						
.850				-.5669	-.3969	-.5267		

REPRODUCIBILITY OF THE
ORIGINAL PAGE IS POOR

```
DATE 10 FEB 76            TABULATED PRESSURE DATA - OA148 ( AMES 11-073-1 )

                               AMES 11-073(OA148) -140A/B/C/R ORB LEFT WING BOT            (XEBL54)

ALPHA ( 1) =   -3.970    BETA  ( 1) =   -3.853

 SECTION ( 1)LEFT WING BOT SURF             DEPENDENT VARIABLE CP

2Y/BW       .2990    .3640    .4270    .5340    .6730    .7800    .8870    .9720

  X/CW
    .857                     -.5620
    .862                                                                -.7304
    .865   -.4969
    .879            -.4810
    .900   -.3485                     -.5669                     -.5012
    .905                     -.5047
    .919            -.4930
    .950                              -.2843   -.6824   -.2448
    .953                     -.2605
    .955            -.2449
    .965   -.3551
   1.000                     -.1430            -.2321            -.1397

ALPHA ( 1) =   -3.931    BETA  ( 2) =     .182   MACH    =  1.1014     Q      =  600.89     P      =  707.69     RN/L    =  3.1837

 SECTION ( 1)LEFT WING BOT SURF             DEPENDENT VARIABLE CP

2Y/BW       .2990    .3640    .4270    .5340    .6730    .7800    .8870    .9720

  X/CW
    .010   -.1298   -.1548   -.0986   -.6017   -.7566   -.6003   -.6012
    .020    .0000   -.1626   -.1345   -.7594   -.7978   -.8298   -.8429   -.9003
    .040            -.1487   -.2476
    .050   -.1295                     -.6712   -.8077   -.8588   -.8690
    .060                                                                -.8989
    .080                              -.6321
    .081                     -.1808
    .086            -.0557
    .094   -.1307
    .150                              -.2840   -.6746   -.7512   -.7822
    .157                                                                -.5262
    .163             .0143
    .177                     -.1801
    .229   -.1036
    .246            -.0824
    .250                              -.1796   -.2251   -.5972   -.7217
    .274                     -.1293
    .345                                                                -.8626
    .330            -.0911
    .400                              -.1262   -.1163            -.3850
    .402                     -.1050
    .503                                                                -.7223
    .550                              -.1210   -.1470
    .565                     -.5393
    .600                                                       -.1451
```

AMES 11-073(OA148) -140A/B/C/R ORB LEFT WING BOT (XEBL54)

ALPHA (1) = -3.931 BETA (2) = .182

SECTION (1)LEFT WING BOT SURF DEPENDENT VARIABLE CP

2Y/BW X/CW	.2990	.3640	.4270	.5340	.6730	.7800	.8870	.9720
.637		-.1102						
.650						-.1687		
.670								-.5185
.700					-.2381			
.725				-.2292				
.750						-.4409	-.4247	
.760			-.2254					
.775				-.5012	-.4413			
.794		-.2098						
[illegible]			-.5032					
.824	-.2306							
.833		-.4705						
.840				-.5652	-.3784	-.5304		
.857			-.5526					
.862								-.6273
.865	-.4837							
.879		-.4713						
.900	-.3562			-.6070			-.5399	
.905			-.6180					
.919		-.4974						
.950				-.3698	-.6708	-.3415		
.953			-.2887					
.955		-.3511						
.965	-.5694							
1.000			-.2061		-.2766		-.2046	

ALPHA (1) = -3.991 BETA (3) = 4.263 MACH = 1.1014 Q = 600.89 P = 707.69 RN/L = 3.1837

SECTION (1)LEFT WING BOT SURF DEPENDENT VARIABLE CP

2Y/BW X/CW	.2990	.3640	.4270	.5340	.6730	.7800	.8870	.9720
.010	-.1170	-.0628	.0466	-.5748	-.7658	-.6275	-.6464	
.020	.0000	-.0569	.0197	-.6940	-.8002	-.8477	-.8653	-.8057
.040		-.0276	-.0950					
.050	-.1018			-.5649	-.7382	-.8324	-.8373	
.069								-.7316
.080				-.2855				
.081			-.0733					
.086		.0485						
.094	-.1042							
.150				-.2136	-.2985	-.6355	-.7901	
.157								-.4081
.163		.1318						

AMES 11-073(OA148) -140A/B/C/R ORB LEFT WING BOT (XE8L54)

ALPHA (1) = -3.991 BETA (3) = 4.263

SECTION (1)LEFT WING BOT SURF DEPENDENT VARIABLE CP

2Y/BW	.2930	.3640	.4270	.5340	.6730	.7800	.8870	.9720
X/CW								
.177			-.1011					
.229	-.0674							
.246		.0113						
.250				-.1304	-.1877	-.2545	-.4621	
.274			-.0664					
.345								-.5912
.390		-.0324						
.400				-.1016	-.1140		-.2241	
.402			-.0749					
.503								-.4859
.550				-.1261	-.1504			
.565			-.4103					
.600							-.1960	
.637		-.1090						
.650						-.1936		
.670								-.4325
.700					-.2607			
.725				-.2373				
.750						-.4767	-.4657	
.760			-.2475					
.775				-.5081	-.5057			
.798		-.2389						
.808			-.4974					
.834	-.2491							
.849		-.4841						
.850				-.5834	-.3970	-.5562		
.857			-.5272					
.862								-.4896
.865	-.5081							
.879		-.4638						
.900	-.3748			-.6432			-.5996	
.905			-.5855					
.919		-.4980						
.950				-.4001	-.6446	-.4769		
.953			-.3305					
.955		-.5058						
.965	-.6140							
1.000			-.2425		-.3170		-.2142	

DATE 10 FEB 76

TABULATED PRESSURE DATA - OA148 (AMES 11-073-1)

AMES 11-073(OA148) -140A/B/C/R ORB LEFT WING BOT (XEBL54)

ALPHA (2) = .009 BETA (1) = -3.870 MACH = 1.1014 Q = 600.89 P = 707.69 RN/L = 3.1864

SECTION (1)LEFT WING BOT SURF DEPENDENT VARIABLE CP

2Y/BW	.2990	.3640	.4270	.5340	.6730	.7800	.8870	.9720
X/CW								
.010	-.0481	-.0076	.2065	-.3324	-.4690	-.3983	-.3135	
.020	.0000	-.0375	.1228	-.4866	-.5497	-.5587	-.5969	-.4357
.040		-.0255	-.0660					
.050	-.0887			-.3201	-.4708	-.5551	-.5993	
.069								-.4324
.080				-.2619				
.081			-.0665					
.085		.0203						
.094	-.1075							
.150				-.1788	-.2147	-.3716	-.4633	
.157								-.2196
.163		.0861						
.177			-.0820					
.229	-.0768							
.246		-.0307						
.250				-.0612	-.0877	-.0941	-.0717	
.274			-.0370					
.345								-.0926
.390		-.0182						
.400				.0094	.0133		-.0238	
.402			.0100					
.503								-.1469
.550				-.0069	-.0388			
.565			-.5208					
.600							-.1123	
.637		-.0038						
.650						-.0906		
.670								-.4114
.700					-.1403			
.725				-.1191				
.750						-.4053	-.4442	
.760			-.1087					
.775				-.4053	-.2848			
.798		-.1086						
.808			-.4609					
.834	-.1653							
.839		-.4214						
.850				-.5087	-.3761	-.5047		
.857			-.5081					
.862								-.4053
.865	-.4467							
.879		-.4211						
.900	-.2521			-.5212			-.4881	
.905			-.5447					
.919		-.4183						

AMES 11-073(OA148) -140A/B/C/R ORB LEFT WING BOT (XEBL54)

ALPHA (2) = .009 BETA (1) = -3.870

SECTION (1)LEFT WING BOT SURF DEPENDENT VARIABLE CP

2Y/BW	.2990	.3645	.4270	.5340	.6730	.7800	.8870	.9720
X/CW								
.950				-.2416	-.6287	-.1708		
.953			-.2019					
.955		-.2125						
.965	-.4059							
1.000			-.0851		-.2003		-.1149	

ALPHA (2) = .092 BETA (2) = .176 MACH = 1.1014 Q = 600.89 P = 707.69 RN/L = 3.1864

SECTION (1)LEFT WING BOT SURF DEPENDENT VARIABLE CP

2Y/BW	.2990	.3540	.4270	.5340	.6730	.7800	.8870	.9720
X/CW								
.010	-.0987	-.0097	.2827	-.2574	-.4460	-.4163	-.3279	
.020	.0000	-.0141	.2176	-.2484	-.4033	-.5405	-.5883	-.2145
.040		.0000	.0547					
.050	-.1052			-.2246	-.3547	-.4323	-.4699	
.069								-.2093
.080				-.1531				
.081			.0011					
.086		.0568						
.094	-.1070							
.150				-.1079	-.0865	-.0615	-.1210	
.157								-.1503
.163		.1598						
.177			-.0376					
.2[illegible]	-.0627							
.246		.0262						
.250				-.0283	-.0485	-.0643	-.1137	
.274			.0028					
.345								-.1027
.340		.0236						
.400				.0036	.0417		-.0197	
.402			.0092					
.503								-.1602
.550				-.0036	-.0315			
.575			-.6121					
.600							-.1368	
.637		-.0184						
.650						-.1042		
.670								-.4339
.700					-.1534			
.725				-.1368				
.750						-.4091	-.4688	
.760			-.1339					

```
DATE 10 FEB 76             TABULATED PRESSURE DATA - OA148 ( AMES 11-073-1 )                                PAGE 2480

                                  AMES 11-073(OA148) -140A/B/C/R ORB LEFT WING BOT                 (XEGL54)

ALPHA ( 2) =      .092     BETA  ( 2) =      .176

 SECTION ( 1)LEFT WING BOT SURF                 DEPENDENT VARIABLE CP

2Y/BW          .2990     .3540     .4270     .5340     .6730     .7800     .8870     .9720

  X/CW
    .775                                    -.4240    -.3373
    .799                -.1291
    .806                          -.4429
    .834      -.1801
    [illegible]         -.4149
    [illegible]                             -.5100    -.3392    -.5147
    [illegible]                   -.4877
    [illegible]                                                                     -.3914
    .865      -.4327
    .870                -.4054
    .900      -.2735                        -.5464                        -.5860
    .905                          -.5432
    .919                -.4279
    .940                                    -.2743    -.6215    -.2570
    .953                          -.2392
    [illegible]         -.3833
    .965      -.4964
   1.000                          -.1402              -.2249              -.1444
ALPHA ( 2) =      .026     BETA  ( 3) =    4.243    MACH   =  1.1014     Q      =  600.89    P      =  707.89    RN/L   =  3.1854

 SECTION ( 1)LEFT WING BOT SURF                 DEPENDENT VARIABLE CP

2Y/BW          .2990     .3540     .4270     .5340     .6730     .7800     .8870     .9720

  X/CW
    .010      -.1987    -.0371     .3382    -.0711    -.2968    -.3484    -.2898
    .020       .0000    -.0111     .2908    -.0933    -.2391    -.3465    -.4514    -.1642
    .040                 .0117     .1635
    .050      -.1488                        -.0862    -.2301    -.2532    -.3310
    .069                                                                            -.1746
    .080                                    -.0595
    .081                           .0900
    .085                 .0931
    .094      -.1225
    .150                                    -.0197    -.0354    -.0775    -.1089
    .157                                                                            -.1724
    .163                 .2004
    .177                           .0501
    .229      -.0632
    [illegible]          [illegible]
    .250                                     .0089    -.0340    -.0549    -.1037
    .274                           .0522
    .345                                                                            -.1404
    .390                 .0586
```

REPRODUCIBILITY OF THE
ORIGINAL PAGE IS POOR

```
                              AMES 11-073(OA148) -140A/B/C/R ORB LEFT WING BOT              (XEBL54)

ALPHA ( 2) =      .026     BETA  ( 3) =     4.243

 SECTION ( 1)LEFT WING BOT SURF               DEPENDENT VARIABLE CP

2Y/BW         .2990    .3640    .4270    .5340    .6730    .7800    .8370    .9720

  X/CW
    .400                                 .0259    .0260            -.0437
    .402                        .0383
    .503                                                                    -.1892
    .550                                -.0237   -.0472
    .565                       -.5012
    .600                                                           -.1661
    .637              -.0149
    .650                                                  -.1273
    .670                                                                    -.4676
    .700                                         -.1866
    .725                                -.1590
    .750                                                  -.4329   -.4866
    .760                       -.1576
    .775                                -.4535   -.4150
    .798              -.1623
    .808                       -.4370
    .818     -.1718
    .839              -.4193
    .850                                -.5065   -.3480   -.5488
    .857                       -.4765
    .862                                                                    -.3559
    .865     -.4176
    .879              -.3997
    .900     -.2848                     -.5925                     -.6225
    .905                       -.5234
    .919              -.4352
    .950                                -.3528   -.5917   -.4100
    .953                       -.3603
    .955              -.4720
    .965     -.5363
   1.000                       -.1689            -.2603            -.2069
ALPHA ( 3) =     3.932     BETA  ( 1) =    -3.873    MACH   =  1.1009      Q      =  600.53      P      =   707.91     RN/L   =   3.1859

 SECTION ( 1)LEFT WING BOT SURF               DEPENDENT VARIABLE CP

2Y/BW         .2990    .3640    .4270    .5340    .6730    .7800    .8870    .9720

  X/CW
    .010     -.0276   -.0601    .4583    .1819    .0950    .1886    .2441
    .020      .0000   -.0044    .4017    .0498    .0928    .0980    .0870    .0675
    .040               .0286    .2388
    .050     -.0229                      .0390    .0400    .0646    .0920
    .060                                                                     .0396
    .080                                 .0387
```

AMES 11-073(OA148) -140A/B/C/R ORB LEFT WING BOT (XE8L54)

ALPHA (3) = 3.932 BETA (1) = -3.873

SECTION (1)LEFT WING BOT SURF DEPENDENT VARIABLE CP

2Y/BW	.2990	.3640	.4270	.5340	.6730	.7800	.8870	.9720
X/CW								
.081			.1275					
.086		.1225						
.094	-.0439							
.150				.1019	.1287	.1299	.1051	
.157								-.0739
.163		.2291						
.177			.0822					
.229	-.0408							
.246		.0665						
.250				.1473	.1379	.1275	.0684	
.274			.1467					
.345								-.0275
.390		.1536						
.400				.1638	.1635		.0807	
.402			.1788					
.503								-.0758
.550				.0915	.0627			
.565			-.5690					
.600							-.0588	
.637		.0975						
.650						-.0167		
.670								-.4176
.700					-.0966			
.725				-.0618				
.750						-.3960	-.3676	
.760			-.0637					
.775				-.3750	-.3317			
.798		-.0546						
.808			-.3872					
.834	-.1076							
.839		-.3722						
.850				-.4820	-.3184	-.4861		
.857			-.4526					
.862								.4661
.865	-.3979							
.879		-.3738						
.900	-.1971			-.5172			-.5324	
.905			-.5163					
.919		-.3736						
.950				-.2199	-.5031	-.5398		
.953			-.1631					
.955		-.2773						
.965	-.4232							
1.000			-.0618		-.1837		-.1855	

DATE 10 FEB 76 TABULATED PRESSURE DATA - OA148 (AMES 11-073-1)

AMES 11-073(OA148) -140A/B/C/R ORB LEFT WING BOT

(XEBL54)

ALPHA (3) = 3.933 BETA (2) = .171 MACH = 1.1009 Q = 600.53 P = 707.91 RN/L = 3.1859

SECTION (1)LEFT WING BOT SURF DEPENDENT VARIABLE CP

2Y/BW	.2990	.3640	.4270	.5340	.6730	.7800	.8870	.9720
X/CW								
.010	-.1648	-.1910	.4351	.2705	.1695	.2608	.2829	
.020	.0000	-.0818	.4214	.1510	.1506	.1479	.1593	.0085
.040		-.0424	.2880					
.050	-.0812			.1284	.0953	.1109	.1343	
.069								-.0004
.080				.1062				
.081			.1833					
.086		.1025						
.094	-.0815							
.150				.1253	.1346	.1507	.1091	
.157								-.0937
.163		.2579						
.177			.1361					
.229	-.0539							
.246		.1303						
.250				.1565	.1402	.1484	.0709	
.274			.1507					
.345								-.0643
.390		.1532						
.400				.1577	.1663		.0775	
.402			.1767					
.503								-.1086
.550				.0936	.0659			
.565			-.6523					
.600							-.0713	
.637		.0959						
.650						-.0300		
.670								-.4530
.700					-.0970			
.725				-.0601				
.750						-.4242	-.3790	
.760			-.0758					
.775				-.3814	-.3265			
.798		-.0775						
.808			-.3701					
.834	-.1049							
.839		-.3600						
.850				-.4683	-.3024	-.4775		
.857			-.4253					
.862								-.4948
.865	-.3935							
.879		-.3453						
.900	-.1953			-.5170			-.5624	
.905			-.4967					
.919		-.3581						

```
DATE 10 FEB 76              TABULATED PRESSURE DATA - OA148 ( AMES 11-073-1 )                              PAGE 2484

                                     AMES 11-073(OA148) -140A/B/C/R ORB LEFT WING BOT                (XEBL54)

ALPHA ( 3) =    3.933    BETA  ( 2) =      .171

 SECTION ( 1)LEFT WING BOT SURF                 DEPENDENT VARIABLE CP

2Y/BW           .2990    .3640    .4270    .5340    .6730    .7800    .8870    .9720

  X/CW
    .950                                   -.2453   -.5683   -.5027
    .953                          -.2236
    .955                 -.4039
    .965        -.4667
   1.000                          -.0918            -.1568            -.2319
ALPHA ( 3) =    3.943    BETA  ( 3) =    4.232   MACH   =  1.1009     Q      =  600.53     P      =  707.91     RN/L   =  3.1859

 SECTION ( 1)LEFT WING BOT SURF                 DEPENDENT VARIABLE CP

2Y/BW           .2990    .3640    .4270    .5340    .6730    .7800    .8870    .9720

  X/CW
    .010        -.3545   -.3325    .3959    .3749    .2666    .3138    .3265
    .020         .0000   -.1735    .4334    .2678    .2344    .2187    .2124   -.1310
    .040                 -.1278    .3373
    .050        -.1705                      .2209    .1687    .1590    .1689
    .063                                                                       -.0963
    .080                                    .1893
    .081                           .2447
    .086                  .0749
    .094        -.1414
    .150                                    .1753    .1685    .1684    .1065
    .157                                                                       -.1393
    .153                  .2726
    .177                           .2065
    .229        -.0760
    .246                  .1853
    .257                                    .1725    .1498    .1490    .0618
    .274                           .1892
    .345                                                                       -.1281
    .390                  .1945
    .400                                    .1562    .1600             .0576
    .402                           .1777
    .503                                                                       -.1608
    .550                                    .0806    .0569
    .565                          -.5658
    .600                                                               -.0927
    .637                  .0869
    .650                                                      -.0509
    .670                                                                       -.4989
    .700                                             -.1021
    .725                                   -.0697
    .750                                                      -.4552   -.4011
    .760                          -.1013
```

```
                                         AMES 11-073(OA148) -140A/B/C/R ORB LEFT WING BOT                    (XEBL54)

ALPHA ( 3) =     3.943    BETA  ( 3) =    4.232

 SECTION ( 1)LEFT WING BOT SURF                DEPENDENT VARIABLE CP

2Y/BW        .2990   .3640   .4270   .5340   .6730   .7800   .8870   .9720

  X/CW
    .775                             -.3882  -.3560
    .798            -.1157
    .808                    -.3632
    .834    -.1107
    .839            -.3582
    .850                             -.4690  -.2950  -.4831
    .857                    -.4132
    .862                                                             -.5322
    .865    -.3886
    .879            -.3396
    .900    -.2255                   -.5432                  -.6022
    .905                    -.4777
    .919            -.3702
    .950                             -.3941  -.5526  -.5185
    .953                    -.4411
    .955            -.4132
    .965    -.4884
   1.000                    -.1232           -.2116          -.2565
ALPHA ( 4) =    7.906    BETA  ( 1) =   -3.871   MACH   =  1.1009     Q      =  600.53     P      =  707.91     RN/L   =  3.1862

 SECTION ( 1)LEFT WING BOT SURF                DEPENDENT VARIABLE CP

2Y/BW        .2990   .3640   .4270   .5340   .6730   .7800   .8870   .9720

  X/CW
    .010    -.1217  -.3801   .4533   .6020   .5632   .6251   .6028
    .020     .0000  -.1500   .5340   .4869   .5036   .5156   .4984  -.0216
    .040            -.0928   .4606
    .050     .0112                   .3900   .3957   .4094   .4096
    .069                                                              .0367
    .080                             .3408
    .081                     .3627
    .085             .0977
    .094     .0136
    .150                             .3165   .3406   .3482   .2866
    .157                                                             -.0710
    .163             .3512
    .177                     .2994
    .229     .0134
    .245             .2644
    .250                             .2982   .2964   .2882   .2216
    .274                     .2935
    .345                                                              .0202
    .390             .2889
```

```
                     AMES 11-073(OA148) -140A/B/G/R ORB LEFT WING BOT           (XEBL54)
ALPHA ( 4) =    7.906    BETA  ( 1) =    -3.871
 SECTION ( 1)LEFT WING BOT SURF              DEPENDENT VARIABLE CP

2Y/BW        .2990   .3640   .4270   .5340   .6730   .7800   .8870   .9720

  X/CW
    .400                             .2638   .2709           .1830
    .402                     .2853
    .503                                                             -.0171
    .550                             .1753   .1601
    .565                    -.6351
    .600                                                     .0067
    .637             .1755
    .650                                             .0369
    .670                                                             -.3762
    .700                                    -.0538
    .725                            -.0084
    .750                                            -.3756  -.3204
    .760                    -.0398
    .775                            -.3214  -.3778
    .798            -.0396
    .808                    -.3126
    .834   -.0630
    .839            -.3359
    .850                            -.4384  -.4300  -.4252
    .857                    -.4008
    .862                                                             -.3956
    .865   -.3585
    .879            -.3310
    .900   -.1281                   -.5017                  -.4865
    .905                    -.4669
    .919            -.3069
    .930                            -.2443  -.4706  -.5508
    .953                    -.3154
    .955            -.3543
    .965   -.3998
   1.000                    -.0802          -.1493          -.3679
ALPHA ( 4) =    8.006    BETA  ( 2) =     .170   MACH   =  1.1009    Q     =  600.53    P     =  707.91    RN/L   =  3.1862
 SECTION ( 1)LEFT WING BOT SURF              DEPENDENT VARIABLE CP

2Y/BW        .2990   .3640   .4270   .5340   .6730   .7800   .8870   .9720

  X/CW
    .010   -.3301  -.6326   .3042   .6036   .5573   .5967   .5733
    .020    .0000  -.3099   .4379   .5081   .5105   .5135   .4932  -.1582
    .040           -.2356   .4518
    .050   -.0887                   .4202   .4164   .4172   .4093
    .059                                                            -.0691
    .080                            .3693
```

AMES.11-073(OA148) -140A/B/C/R ORB LEFT WING BOT (XEBL54)

ALPHA (4) = 8.006 BETA (2) = .170

SECTION (1)LEFT WING BOT SURF DEPENDENT VARIABLE CP

2Y/BW	.2990	.3640	.4270	.5340	.6730	.7800	.8870	.9720
X/CW								
.081			.3779					
.086		.0103						
.094	-.0512							
.150				.3285	.3465	.3498	.2799	
.157								-.1024
.163		.3425						
.177			.3243					
.229	-.0290							
.246		.2745						
.250				.3058	.3030	.2924	.2163	
.274			.3051					
.345								-.0286
.390		.2924						
.400				.2677	.2671		.1700	
.402			.2865					
.503								-.0622
.550				.1766	.1539			
.565			-.7143					
.600							-.0136	
.637		.1778						
.650						.0261		
.670								-.4244
.700					-.0355			
.725				.0029				
.750						-.3883	-.3316	
.760			-.0325					
.775				-.3194	-.3356			
.798		-.0394						
.808			-.3146					
.834	-.0578							
.839		-.3182						
.850				-.4268	-.4025	-.4249		
.857			-.3715					
.862								-.4495
.865	-.3506							
.879		-.2920						
.900	-.1273			-.5074			-.5024	
.905			-.4348					
.919		-.2972						
.940				-.1946	-.4041	-.5382		
.943			-.3717					
.955		-.3595						
.965	-.4304							
1.000			-.0698		-.1605		-.4065	

DATE 10 FEB 76 TABULATED PRESSURE DATA - OA148 (AMES 11-073-1)

AMES 11-073(OA148) -140A/B/C/R ORB LEFT WING BOT (XE8L54)

ALPHA (4) = 8.008 BETA (3) = 4.224 MACH = 1.1009 Q = 600.53 P = 707.91 RN/L = 3.18E2

SECTION (1)LEFT WING BOT SURF DEPENDENT VARIABLE CP

2Y/BW	.2990	.3640	.4270	.5340	.6730	.7800	.8870	.9720
X/CW								
.010	-.5514	-.4397	.1953	.5844	.5415	.5486	.5140	
.020	.0000	-.3497	.3433	.5210	.5001	.4951	.4630	-.3366
.040		-.2796	.4138					
.050	-.1908			.4435	.4166	.4041	.3858	
.069								-.1967
.080				.3891				
.081			.3830					
.095		-.0262						
.104	-.1296							
.150				.3380	.3441	.3366	.2631	
.157								-.1492
.163		.3334						
.177			.3416					
.229	-.0579							
.246		.2911						
.250				.3019	.2945	.2797	.1929	
.274			.3109					
.345								-.1045
.390		.3001						
.400				.2553	.2535		.1435	
.402			.2799					
.503								-.1263
.550				.1641	.1384			
.565			-.6351					
.600							-.0472	
.637		.1643						
.650						.0071		
.670								-.4826
.700					-.0274			
.725				-.0065				
.750						-.3974	-.5498	
.760			-.0532					
.775				-.3347	-.3500			
.799		-.0638						
.808			-.3159					
.834	-.0653							
.839		-.3200						
.850				-.4212	-.3094	-.4367		
.857			-.3651					
.862								-.5336
.865	-.3541							
.879		-.2943						
.900	-.1771			-.5120			-.5263	
.905			-.4233					
.913		-.3203						

REPRODUCIBILITY OF THE
ORIGINAL PAGE IS POOR

AMES 11-073(OA148) -140A/B/C/R ORB LEFT WING BOT (XEBL54)

ALPHA (4) = 8.008 BETA (3) = 4.224

SECTION (1)LEFT WING BOT SURF DEPENDENT VARIABLE CP

2Y/BW	.2990	.3640	.4270	.5340	.6730	.7800	.8870	.9720
X/CW								
.950				-.4524	-.4426	-.5127		
.953			-.4074					
.955		-.3621						
.955	-.4312							
1.000			-.0932		-.2198		-.4585	

ALPHA (5) = 11.922 BETA (1) = -3.854 MACH = 1.1005 Q = 600.31 P = 708.13 RN/L = 3.1832

SECTION (1)LEFT WING BOT SURF DEPENDENT VARIABLE CP

2Y/BW	.2990	.3640	.4270	.5340	.6730	.7800	.8870	.9720
X/CW								
.010	-.2787	-.5673	.2395	.7395	.7330	.7288	.6819	
.020	.0000	-.2079	.4632	.6904	.7030	.6994	.6549	-.1873
.040		-.1275	.5513					
.050	.0144			.5923	.6079	.6077	.5757	
.059								-.0383
.080				.5301				
.081			.5040					
.085		.1821						
.094	.0573							
.150				.4692	.4955	.4951	.4242	
.157								-.0884
.163		.4564						
.177			.4459					
.203	.0821							
.246		.3897						
.250				.4272	.4322	.4169	.3445	
.274			.4159					
.2[illegible]								.0653
.300		.3934						
.400				.3620	.3635		.2634	
.402			.3815					
.503								.0202
.550				.2529	.2326			
.565			-.6715					
.600							.0634	
.637		.2463						
.650						.0988		
.670								-.3640
.700					.0582			
.725				.0685				
.750						-.3128	-.2665	
.750			.0055					

AMES 11-073(OA148) -140A/B/C/R ORB LEFT WING BOT (XEBL54)

ALPHA (5) = 11.922 BETA (1) = -3.854

SECTION (1)LEFT WING BOT SURF DEPENDENT VARIABLE CP

2Y/BW	.2990	.3640	.4270	.5340	.6730	.7800	.8870	.9720
X/CW								
.775				-.2576	-.3007			
.799		.0022						
.808			-.2493					
.834	-.0069							
.839		-.3072						
.850				-.3953	-.4172	-.3731		
.857			-.3397					
.862								-.4162
.865	-.3174							
.873		-.3006						
.900	-.1165			-.4616			-.4304	
.905			-.4205					
.919		-.2546						
.950				-.5586	-.4545	-.5169		
.953			-.3813					
.964		-.2969						
[illegible]	-.3134							
1.000			-.1251		-.3113		-.5039	

ALPHA (5) = 11.941 BETA (2) = .179 MACH = 1.1005 Q = 600.31 P = 708.13 RN/L = 3.1932

SECTION (1)LEFT WING BOT SURF DEPENDENT VARIABLE CP

2Y/BW	.2990	.3640	.4270	.5340	.6730	.7800	.8870	.9720
X/CW								
.010	-.4921	-.6454	.0022	.6627	.6746	.6369	.5939	
.020	.0000	-.3297	.2778	.6580	.6622	.6499	.5950	-.3367
.040		-.2473	.4620					
.050	-.0901			.5906	.5990	.5781	.5432	
.069								-.1470
.080				.5346				
.081			.4760					
.086		.0627						
.094	-.0237							
.150				.4766	.4899	.4879	.4019	
.157								-.1057
.163		.3906						
.177			.4473					
.229	.0358							
.245		.3592						
.250				.4261	.4197	.4090	.3237	
.274			.4173					
.345								.0032
.390		.3890						

AMES 11-073(OA148) -140A/B/C/R ORB LEFT WING BOT (XEBL54)

ALPHA (5) = 11.941 BETA (2) = .179

SECTION (1)LEFT WING BOT SURF DEPENDENT VARIABLE CP

2Y/BW	.2390	.3640	.4270	.5340	.6730	.7800	.8870	.9720
X/CW								
.400				.3572	.3583		.2429	
.402			.3778					
.503								-.0231
.550				.2519	.2291			
.565			-.7183					
.600							.0495	
.637		.2427						
.650						.1007		
.670								-.4084
.700					.0590			
.725				.0653				
.750						-.3202	-.2741	
.760			.0074					
.775				-.2629	-.3067			
.798		.0007						
.808			-.2630					
.834	-.0029							
.839		-.2839						
.850				-.3723	-.4067	-.3870		
.857			-.3261					
.862								-.4690
.865	-.3135							
.879		-.2442						
.900	-.0892			-.4681			-.4508	
.905			-.3713					
.919		-.2511						
.950				-.5293	-.4513	-.5127		
.953			-.3526					
.975		-.3035						
.985	-.3660							
1.000			-.1622		-.2283		-.5526	

ALPHA (5) = 12.006 BETA (3) = 4.239 MACH = 1.1005 Q = 600.31 P = 708.13 RN/L = 3.1832

SECTION (1)LEFT WING BOT SURF DEPENDENT VARIABLE CP

2Y/BW	.2390	.3640	.4270	.5340	.6730	.7800	.8870	.9720
X/CW								
.010	-.6378	-.6579	-.1734	.5754	.5807	.5204	.4734	
.020	.0000	-.4517	.1231	.6041	.5989	.5764	.5161	-.4738
.040		-.3511	.3824					
.050	-.1921			.5629	.5608	.5301	.4875	
.060								-.2696
.080				.5115				

DATE 10 FEB 75 TABULATED PRESSURE DATA - OA148 (AMES 11-073-1)

AMES 11-073(OA148) -140A/B/C/R ORB LEFT WING BOT (XEBL54)

ALPHA (5) = 12.006 BETA (3) = 4.239

SECTION (1)LEFT WING BOT SURF DEPENDENT VARIABLE CP

2Y/BW	.2990	.3640	.4270	.5340	.6730	.7800	.8870	.9720
X/CW								
.081			.4554					
.086		-.0294						
.094	-.0988							
.150				.4506	.4627	.4533	.3619	
.157								-.1666
.163		.3428						
.177			.4393					
.223	-.0187							
.246		.3461						
.253				.4035	.3973	.3826	.2884	
.274			.4060					
.345								-.0665
.390		.3853						
.400				.3382	.3328		.2066	
.402			.3621					
.503								-.0873
.550				.2339	.2096			
.565			-.6690					
.600							.0216	
.637		.2349						
.650						.0858		
.670								-.4541
.700					.0433			
.725				.0474				
.750						-.3544	-.2888	
.760			-.0033					
.775				-.2866	-.3237			
.798		-.0176						
.808			-.2670					
.834	-.0135							
.839		-.2785						
.850				-.3767	-.4116	-.4119		
.857			-.3247					
.862								-.5387
.865	-.3104							
.879		-.2445						
.900	-.1323			-.4688			-.4802	
.925			-.3613					
.939		-.2712						
.950				-.5079	-.4539	-.5276		
.953			-.3469					
.955		-.3040						
.965	-.3253							
1.000			-.2422		-.2105		-.6095	

```
                                   AMES 11-073(OA148) -140A/B/C/R ORB LEFT WING BOT              (XEBL55)   ( 05 AUG 75  )

             REFERENCE DATA                                                                   PARAMETRIC DATA

SREF  =  2690.0000 SQ.FT.   XMRP  =  1076.6800 IN. XO                                 RUDDER =   -10.000   SPDBRK =     55.000
LREF  =   474.8000 IN.      YMRP  =      .0000 IN. YO                                 BDFLAP =    16.300   L-ELVN =     -4.000
BREF  =   936.0680 IN.      ZMRP  =   375.0000 IN. ZO                                 R-ELVN =     4.000   MACH   =       .900
SCALE =      .0300

ALPHA ( 1) =   -3.986   BETA  ( 1) =   -3.861   MACH   =  .90063     Q     =  600.64    P     =  1057.8    RN/L   =  3.5876

 SECTION ( 1)LEFT WING BOT SURF            DEPENDENT VARIABLE CP

2Y/BW       .2930   .3640   .4270   .5340   .6730   .7800   .8870   .9720

  X/CW
    .010   -.1234  -.2312  -.4959 -1.0874 -1.2547 -1.0185 -1.0438
    .020    .0000  -.2490  -.5443 -1.2629 -1.3047 -1.3288 -1.3352 -1.3543
    .040           -.2266  -.6527
    .050   -.1295                  -1.1612 -1.3047 -1.3669 -1.3682
    .069                                                           -1.2477
    .080                           -1.0650
    .081                   -.4789
    .085           -.1147
    .094   -.1147
    .150                            -.6264 -1.1421 -1.2227 -1.2488
    .157                                                            -.6258
    .163           -.1695
    .177                   -.4697
    .223   -.0510
    .245           -.3139
    .250                            -.4031  -.4696  -.9123 -1.1614
    .274                   -.3730
    [illegible]                                                     -.6671
    .300           -.3292
    .400                            -.2690  -.2646           -.3881
    .402                   -.2550
    .503                                                            -.6056
    .550                            -.3090  -.2537
    .565                   -.7604
    .600                                                     -.2007
    .637           -.2884
    .650                                             -.2308
    .670                                                            -.5428
    .700                                    -.2368
    .725                            -.2326
    750                                              -.5263  -.6039
    .760                   -.2088
    .775                            -.7286  -.6112
    .788           -.2680
    .808                   -.7934
    .834   -.3140
    .839           -.6505
    .850                            -.3800  -.4946  -.4034
```

```
                                   AMES 11-073(OA148) -140A/B/C/R ORB LEFT WING BOT          (XEBL55)

ALPHA ( 1) =    -3.986    BETA  ( 1) =    -3.861

 SECTION ( 1)LEFT WING BOT SURF              DEPENDENT VARIABLE CP

2Y/BW        .2990   .3640   .4270   .5340   .6730   .7800   .8870   .9720

  X/CW
   .857                     -.3982
   .862                                                             -.5666
   .865    -.6190
   .873            -.3303
   .900    -.3393                   -.3216                  -.3115
   .905                     -.2741
   .919            -.1978
   .930                             -.2745  -.3502  -.2273
   .943                     -.1839
   .955            -.1341
   .965    -.1196
  1.000                     -.0367          -.1072          -.0759

ALPHA ( 1) =    -3.902    BETA  ( 2) =      .179   MACH   =  .90063    Q      =  600.64    P      =  1057.8    RN/L   =  3.5875

 SECTION ( 1)LEFT WING BOT SURF              DEPENDENT VARIABLE CP

2Y/BW        .2990   .3640   .4270   .5340   .6730   .7800   .8870   .9720

  X/CW
   .010    -.0410  -.1054  -.3071 -1.0646 -1.2719 -1.0638 -1.0922
   .020     .0000  -.0885  -.3558 -1.2316 -1.3252 -1.3565 -1.1215  -.7063
   .040            -.0718  -.4582
   .050    -.0592                 -1.1037 -1.2520 -1.2811 -1.1317
   .059                                                             -.6485
   .080                             -.6810
   .091                     -.3860
   .096            -.0223
   .094    -.0530
   .150                             -.5005  -.6572 -1.0060  -.9656
   .157                                                             -.3874
   .163            -.0931
   .177                     -.3914
   .229    -.0101
   .246            -.2463
   .250                             -.3597  -.3856  -.6198  -.8187
   .274                     -.3086
   .345                                                             -.4521
   .370            -.2791
   .400                             -.2555  -.2814          -.6062
   .407                     -.2333
[illegible]                                                         -.4319
   .540                             -.3097  -.3355
   .565                     -.7417
   .600                                                     -.3449
```

```
                                   (OA148) -140A/B/C/R ORB LEFT WING BOT           (XE8L55)

ALPHA ( 1) =    -3.902    BETA  ( 2) =

 SECTION ( 1)LEFT WING BOT SURF            DEPENDENT VARIABLE CP

2Y/BW         .2390     .3640     .4270     .5340     .6730     .7800     .8870     .9720

  X/CW
    .637                -.2831
    .650                                                        -.3064
    .670                                                                            -.4777
    .700                                              -.3088
    .725                                    -.3028
    .750                                                        -.5517    -.5406
    .760                          -.2743
    .775                                    -.6732    -.6643
    .798                -.3468
    .808                          -.6954
    .834      -.3606
    .839                -.5821
    .850                                    -.3698    -.4482    -.3877
    .857                          -.3791
    .862                                                                            -.4036
    .865      -.6528
    .879                -.3324
    .900      -.3471                        -.3222                        -.2929
    .905                          -.2826
    .919                -.2221
    .950                                    -.2853    -.2639    -.2088
    .953                          -.2156
    .955                -.1622
    .965      -.1662
   1.000                          -.1268              -.1038              -.1239
ALPHA ( 1) =    -3.962    BETA  ( 3) =    4.262   MACH   =  .90063     Q      =  600.64     P      =  1057.8     RN/L   =  3.5876

 SECTION ( 1)LEFT WING BOT SURF            DEPENDENT VARIABLE CP

2Y/BW         .2990     .3640     .4270     .5340     .6730     .7800     .8870     .9720

  X/CW
    .010      .0124     .0004    -.1464   -1.0325   -1.2815   -1.0848    -.9582
    .020      .0000     .0096    -.2055   -1.0883   -1.2835   -1.1439    -.9343    -.6884
    .040                .0235    -.2997
    .050     -.0130                         -.6675   -1.2228   -1.1306    -.8481
    .069                                                                            -.6273
    .080                                    -.5318
    .091                          -.3002
    .085                .0412
    .094     -.0135
    .150                                    -.4249    -.4769    -.8956    -.7722
    .157                                                                            -.3855
    .163               -.0236
```

```
                                   AMES 11-073(OA148) -140A/B/C/R ORB LEFT WING BOT           (XEBL55)

ALPHA ( 1) =    -3.962    BETA  ( 3) =     4.262

 SECTION ( 1)LEFT WING BOT SURF               DEPENDENT VARIABLE CP

2Y/BW         .2900     .3640     .4270     .5340     .6730     .7800     .8870     .9720

  X/CW
    .177                         -.2990
    .229      .0193
    .246               -.1986
    .250                                   -.3234    -.3530    -.5207    -.7024
    .274                         -.2792
    .345                                                                           -.4235
    .390               -.2313
    .400                                   -.2473    -.2635              -.5025
    .402                         -.2161
    .503                                                                           -.3903
    .550                                   -.3099    -.3632
    .565                         -.7523
    .600                                                                 -.3322
    .637               -.2752
    .650                                                       -.3376
    .670                                                                           -.4460
    .700                                             -.3369
    .725                                   -.3611
    .750                                                       -.5456    -.5593
    .760                         -.3342
    .775                                   -.6022    -.5891
    .798               -.3674
    .808                         -.6624
    .834     -.3627
    .839               -.5075
    .850                                   -.3697    -.3554    -.3959
    .857                         -.3368
    .862                                                                           -.3364
    .865     -.6377
    .879               -.2944
    .900     -.3303                        -.3090                        -.2486
    .905                         -.2312
    .919               -.2059
    .940                                   -.2471    -.1952    -.1761
    .953                         -.1651
    .955               -.1724
    .965     -.2058
   1.000                         -.1129              -.1086              -.0670
```

```
                              AMES 11-073(OA148) -140A/B/C/R ORB LEFT WING BOT                 (XE8L55)

ALPHA ( 2) =      .074    BETA  ( 1) =    -3.874   MACH   =  .89883    Q     =  599.16     P     =  1059.5     RN/L   =  3.5834

 SECTION ( 1)LEFT WING BOT SURF               DEPENDENT VARIABLE CP

2Y/BW       .2990   .3640   .4270   .5340   .6730   .7800   .8870   .9720

  X/CW
   .010     .0333   .0896   .0908  -.6617  -.8319  -.7694  -.6368
   .020     .0000   .0695  -.0175  -.6315  -.7647  -.7778  -.9146  -.3397
   .040             .0771  -.1704
   .050     .0022                  -.5408  -.6065  -.6821  -.7811
   .069                                                             -.3648
   .080                            -.3513
   .081                    -.2045
   .086             .0894
   .094    -.0101
   .150                            -.2130  -.2290  -.2616  -.2804
   .157                                                             -.2366
   .163             .0162
   .177                    -.1853
   .229     .0259
   .246            -.1371
   [illegible]                     -.1559  -.2042  -.2448  -.2698
   [illegible]             -.1310
   .345                                                             -.2951
   .390            -.1104
   .400                            -.1291  -.1447          -.2013
   .402                    -.0686
   .503                                                             -.2102
   .550                            -.2057  -.2214
   .555                    -.8621
   .600                                                    -.3008
   .637            -.1939
   .650                                            -.3497
   .670                                                             -.5659
   .700                                    -.3063
   .725                            -.2456
   .750                                            -.4411  -.7226
   .760                    -.2026
   .775                            -.6887  -.6238
   .798            -.2436
   .808                    -.7673
   .834    -.2849
   .839            -.6707
   .850                            -.4559  -.4953  -.4082
   .857                    -.3827
   .862                                                             -.1933
   .875    -.5423
   .879            -.3229
   [illegible] -.3268              -.3094                  -.2032
   [illegible]             -.2879
   .919            -.1873
```

```
                              AMES 11-073(OA148) -140A/B/C/R ORB LEFT WING BOT          (XEBL55)

ALPHA ( 2) =     .074    BETA  ( 1) =   -3.874

 SECTION ( 1)LEFT WING BOT SURF          DEPENDENT VARIABLE CP

2Y/BW      .2990   .3640   .4270   .5340   .6730   .7800   .8870   .9720

  X/CW
    .950                          -.2959  -.3676  -.2741
    .953                  -.2142
    .955          -.1343
    .965  -.1164
   1.000                  -.1021          -.1179          -.0807

ALPHA ( 2) =     .080    BETA  ( 2) =     .167  MACH   =  .89883   Q      =  599.13   P      =  1059.5   RN/L   =  3.5834

 SECTION ( 1)LEFT WING BOT SURF          DEPENDENT VARIABLE CP

2Y/BW      .2990   .3640   .4270   .5340   .6730   .7800   .8870   .9720

  X/CW
    .010   .0292   .1042   .1888  -.4688  -.6599  -.7122  -.6204
    .020   .0000   .1030   .1009  -.4721  -.5935  -.6214  -.8023  -.3292
    .040           .1198  -.0596
    .050   .0206                  -.3654  -.4757  -.5563  -.6679
    .069                                                          -.3301
    .080                          -.2888
    .081                  -.1278
    .085           .1288
    .094   .0158
    .150                          -.1865  -.2007  -.2320  -.3152
    .157                                                          -.2544
    .163           .0707
    .177                  -.1417
    .229   .0484
    .246          -.0932
    .250                          -.1380  -.1936  -.2303  -.2726
    .274                  -.1152
    .345                                                          -.3326
    .390          -.0913
    .400                          -.1373  -.1527          -.2199
    .402                  -.0979
    .503                                                          -.1975
    .550                          -.2084  -.2300
    .565                  -.8617
    .600                                                  -.3389
    .637          -.2005
    .650                                          -.3611
    .670                                                          -.5521
    .700                                  -.3169
    .725                          -.2622
    .750                                          -.4578  -.6960
    .760                  -.2277
```

```
                                            AMES 11-073(OA148) -140A/B/C/R ORB LEFT WING BOT              (XEBL55)

ALPHA ( 2) =      .080    BETA  ( 2) =      .167

 SECTION ( 1)LEFT WING BOT SURF            DEPENDENT VARIABLE CP

2Y/BW        .2990   .3640   .4270   .534     730   .7800   .8870   .9720

  X/CW
   .775                            [illegible] -.6198
   .798         -.2549
   .808                 -.7577
   .834  -.3062
   .839         -.6367
   .850                         -.3653  -.4234  -.4225
   .857                 -.3619
   .862                                                 -.1823
   .865  -.6229
   .879         -.3245
   .900  -.3595                 -.3208                  -.2033
   .905                 -.2726
   .919         -.2106
   .950                         -.2964  -.2878  -.2426
   .953                 -.2277
   .955         -.1496
   .965  -.1642
  1.000                 -.1320          -.1134          -.0885
ALPHA ( 2) =      .067    BETA  ( 3) = . 4.244   MACH   =  .89883     Q      =  599.16     P      =  1059.5     RN/L   =  3.5834

 SECTION ( 1)LEFT WING BOT SURF            DEPENDENT VARIABLE CP

2Y/BW        .2990   .3640   .4270   .5340   .6730   .7800   .8870   .9720

  X/CW
   .010  -.0106   .0801   .2308  -.2871  -.4971  -.5534  -.5275
   .020   .0000   .1007   .1687  -.3473  -.4131  -.4755  -.6216  -.2869
   .040           .1191   .0210
   .050   .0103                  -.2460  -.3534  -.4025  -.4551
   .059                                                          -.3217
   .080                          -.2087
   .081                  -.0535
   .086           .1420
   .094   .0118
   .150                          -.1488  -.1690  -.2008  -.3014
   .157                                                          -.2538
   .163           .1068
   .177                  -.0962
   .229   .0447
   .246          -.0571
   .250                          -.1200  -.1690  -.2044  -.2635
   .274                  -.0936
   .345                                                          -.3473
   .390          -.0687
```

```
                               AMES 11-073(OA148) -140A/B/C/R ORB LEFT WING BOT              (XEBL55)

ALPHA ( 2) =      .067    BETA  ( 3) =    4.244

 SECTION ( 1)LEFT WING BOT SURF             DEPENDENT VARIABLE CP

2Y/BW        .2990    .3640    .4270    .5340    .6730    .7800    .8870    .9720

  X/CW
   .400                               -.1274   -.1474            -.2201
   .402                      -.0893
   .500                                                                   -.3377
   .550                               -.2116   -.2379
   .565                      -.8758
   .600                                                          -.3931
   .637             -.1954
   .650                                                 -.3699
   .670                                                                   -.5123
   .700                                        -.3234
   .725                               -.2547
   .750                                                 -.5024   -.6760
   .760                      -.2493
   .775                               -.6493   -.6167
   .793             -.2863
   .808                      -.7425
   .834    -.2979
   .839             -.5562
   .850                               -.3398   -.3682   -.3682
   .857                      -.3341
   .862                                                                   -.1435
   .865    -.5649
   .879             -.3391
   .890    -.3533                     -.3171                     -.2114
   .900                      -.2503
   .919             -.2259
   .950                               -.2893   -.2266   -.2176
   .953                      -.1956
   .955             -.1516
   .965    -.2046
  1.000                      -.1089            -.1268            -.0823
ALPHA ( 3) =    3.946    BETA  ( 1) =   -3.879   MACH   =  .89970     Q     =  599.92     P     =  1056.7     RN/L   =  3.5860

 SECTION ( 1)LEFT WING BOT SURF             DEPENDENT VARIABLE CP

2Y/BW        .2990    .3640    .4270    .5340    .6730    .7800    .8870    .9720

  X/CW
   .010     .0178    .1242    .3943    .0909    .0195    .1053    .1261
   .020     .0000    .1655    .3304   -.0278   -.0131   -.0171   -.0401   -.1043
   .040              .1899    .1631
   .050     .0583                     -.0389   -.0635   -.0625   -.0692
   .059                                                                   -.1589
   .080                               -.0367
```

```
DATE 10 FEB 76            TABULATED PRESSURE DATA - OA148 ( AMES 11-073-1 )                                PAGE 2501
                                    AMES 11-073(OA148) -140A/B/C/R ORB LEFT WING BOT               (XEBL55)
ALPHA ( 3) =    3.946   BETA  ( 1) =   -3.879
 SECTION ( 1)LEFT WING BOT SURF               DEPENDENT VARIABLE CP

2Y/BW        .2990    .3640    .4270    .5340    .6730    .7800    .8870    .9720

 X/CW
   .081                             .0554
   .086                    .2265
   .094           .0557
   .150                                      .0005   -.0149   -.0221   -.0825
   .157                                                                         -.1830
   .163                    .1870
   .177                             .0166
   .229           .1006
   .246                    .0280
   .250                                      .0032   -.0312   -.0564   -.1100
   .274                             .0168
   .345                                                                         -.2407
   .390                    .0209
   .400                                     -.0195   -.0317            -.1222
   .402                             .0152
   .503                                                                         -.2932
   .550                                     -.1230   -.1468
   .565                            -.9030
   .600                                                                -.3010
   .637                   -.1179
   .650                                                       -.2905
   .670                                                                         -.5899
   .700                                              -.2641
   .725                                     -.1507
   .750                                                       -.5475   -.7040
   .760                            -.1533
   .775                                     -.7290   -.6430
   .798                   -.1790
   .808                            -.7861
   .834          -.2174
   .839                   -.6754
   .850                                     -.4705   -.5723   -.4352
   .857                            -.4221
   .862                                                                         -.2084
   .865          -.6262
   .879                   -.3746
   .900          -.3678                     -.2665                     -.2218
   .905                            -.2603
   .919                   -.1677
   .940                                     -.1914   -.2664   -.1692
   .945                            -.1543
   .955                   -.1051
   .965          -.1039
  1.000                            -.0606            -.0634            -.0972
```

```
DATE 10 FEB 76              TABULATED PRESSURE DATA - OA148 ( AMES 11-073-1 )                                  PAGE 2502

                                     AMES 11-073(OA148) -140A/B/C/R ORB LEFT WING BOT                    (XEBL55)

ALPHA ( 3) =    3.951   BETA  ( 2) =    .176   MACH   =  .89970    Q     =  599.92    P     =  1058.7    RN/L   =  3.5260

 SECTION ( 1)LEFT WING BOT SURF            DEPENDENT VARIABLE CP

2Y/BW      .2990   .3640   .4270   .5340   .6730   .7800   .8870   .9720

  X/CW
    .010  -.0790  -.0031   .3652   .1731   .0783   .1466   .1443
    .020   .0000   .0959   .3430   .0493   .0431   .0302   .0004  -.2083
    .040           .1355   .2065
    .050   .0235                   .0193  -.0195  -.0298  -.0538
    .069                                                          -.2377
    .080                           .0045
    .081                   .0970
    .086           .2092
    .094   .0381
    .150                           .0118  -.0028  -.0220  -.0888
    .157                                                          -.2124
    .163           .2076
    .177                   .0376
    .199   .0697
    .246           .0519
    .250                           .0071  -.0300  -.0554  -.1241
    .274                   .0256
    .345                                                          -.2976
    .390           .0263
    .400                          -.0299  -.0430          -.1435
    .492                   .0111
    .503                                                          -.3462
    .550                          -.1284  -.1559
    .555                  -.9061
    .600                                                  -.3224
    .637          -.1214
    .650                                          -.2931
    .670                                                          -.5870
    .700                                  -.2174
    .725                          -.1635
    .750                                          -.4928  -.6377
    .760                  -.1648
    .775                          -.7115  -.6401
    .798          -.1935
    .809                  -.7741
    .834  -.2264
    .839          -.6467
    .850                          -.3635  -.4825  -.4112
    .857                  -.3673
    .862                                                          -.1637
    .865  -.5873
    .879          -.3700
    .900  -.3669                  -.3021                  -.2614
    .914                  -.2436
    .919          -.2018
```

AMES 11-073(OA148) -140A/B/C/R ORB LEFT WING BOT (XEBL55)

ALPHA (3) = 3.951 BETA (2) = .176

SECTION (1)LEFT WING BOT SURF DEPENDENT VARIABLE CP

2Y/BW	.2990	.3640	.4270	.5340	.6730	.7800	.8870	.9720
X/CW								
.950				-.2640	-.2115	-.2612		
.953			-.2024					
.955		-.1290						
.965	-.1477							
1.000			-.1015		-.0721		-.0580	

ALPHA (3) = 3.955 BETA (3) = 4.235 MACH = .89970 Q = 599.92 P = 1058.7 RN/L = 3.5850

SECTION (1)LEFT WING BOT SURF DEPENDENT VARIABLE CP

2Y/BW	.2990	.3640	.4270	.5340	.6730	.7800	.8870	.9720
X/CW								
.010	-.2143	-.1568	.2952	.2465	.1444	.2016	.1877	
.020	.0000	-.0162	.3190	.1246	.0983	.0963	.0685	-.3599
.040		.0408	.2306					
.050	-.0312			.0821	.0279	.0177	-.0071	
.059								-.3206
.080				.0498				
.081			.1245					
.086		.1703						
.094	.0041							
.150				.0323	.0186	-.0041	-.0799	
.157								-.2543
.163		.2114						
.177			.0594					
.223	.0672							
.240		.0575						
.250				.0085	-.0172	-.0443	-.1296	
.274			.0335					
.345								-.3533
.390		.0394						
.400				-.0325	-.0432		-.1557	
.402			.0091					
.503								-.3777
.550				-.1234	-.1590			
.595			-.9558					
.600							-.3369	
.637		-.1221						
.650						-.2817		
.670								-.5960
.700					-.2238			
.725				-.1741				
.750						-.5477	-.6266	
.760			-.1967					

```
                          AMES 11-073(OA148) -140A/B/C/R ORB LEFT WING BOT            (XEBL55)

ALPHA ( 3) =    3.956    BETA  ( 3) =    4.235

 SECTION ( 1)LEFT WING BOT SURF              DEPENDENT VARIABLE CP

2Y/BW       .2990   .3640   .4270   .5340   .6730   .7800   .8870   .9720

  X/CW
   .775                             -.7117  -.6040
   .788             -.2181
   .808                     -.7545
   .834    -.2365
   .839             -.5919
   .850                             -.3335  -.4073  -.3572
   .857                     -.3471
   .862                                                             -.1616
   .865    -.5747
   .879             -.3761
   .900    -.3770                   -.2931                  -.2884
   .905                     -.2381
   .913             -.2202
   .930                             -.2602  -.2054  -.2961
   .953                     -.1841
   .955             -.1409
   .965    - 2176
  1.000                     -.1029          -.0934          -.1031
ALPHA ( 4) =    7.893    BETA  ( 1) =   -3.876   MACH   =  .89863    Q     =  599.02    P     =  1059.6    RN/L   =  3.5993

 SECTION ( 1)LEFT WING BOT SURF              DEPENDENT VARIABLE CP

2Y/BW       .2990   .3640   .4270   .5340   .6730   .7800   .8870   .9720

  X/CW
   .010    -.1643  -.1724   .4138   .4923   .4430   .5015   .4666
   .020     .0000   .0554   .4640   .3704   .3768   .3773   .3526  -.2736
   .040             .1262   .3605
   .050     .0418                   .2673   .2576   .2593   .2301
   .059                                                             -.1995
   .063                             .2133
   .081                     .2651
   .086             .2840
   .094     .0911
   .150                             .1810   .1797   .1753   .0972
   .157                                                             -.1962
   .163             .3225
   .177                     .1858
   .229     .1532
   .246             .1793
   .250                             .1442   .1227   .1046   .0274
   .274                     .1496
   .345                                                             -.2034
   .390             .1450
```

```
DATE 10 FEB 76            TABULATED PRESSURE DATA - OA148 ( AMES 11-073-1 )                                          PAGE 2505

                                    AMES 11-073(OA148) -140A/B/C/R ORB LEFT WING BOT                (XE8L55)

ALPHA ( 4) =    7.893    BETA  ( 1) =    -3.876

 SECTION ( 1)LEFT WING BOT SURF                   DEPENDENT VARIABLE CP

2Y/BW        .2990    .3640    .4270    .5340    .6730    .7800    .8870    .9720

  X/CW
    .400                                 .0795    .0773             -.0377
    .402                         1157
    .503                                                                      -.2589
    .550                                -.0398   -.0600
    .555                        -.6753
    .600                                                            -.2357
    .637               -.0353
    .650                                                   -.2294
    .670                                                                      -.5904
    .700                                         -.2285
    .725                                -.1459
    .750                                                   -.5549   -.5738
    .760                        -.1524
    .775                                -.7202   -.5986
    .793               -.1571
    .808                        -.7539
    .834     -.2370
    .839               -.6617
    .850                                -.7728   -.5139   -.8473
    .857                        -.5094
    .862                                                                      -.4939
    .865     -.6281
    .879               -.5055
    .900     -.4300                     -.2695                      -.8877
    .905                        -.2635
    .919               -.2124
    .940                                -.1810   -.3485   -.4820
    .945                        -.1608
    .955               -.1242
    .975     -.1415
   1.000                        -.0772            -.2197             -.2984
ALPHA ( 4) =    3.030    BETA  ( 2) =     .173   MACH   =  .89863    Q     =  599.02    P     =  1059.8    RN/L  =  3.5693

 SECTION ( 1)LEFT WING BOT SURF                  DEPENDENT VARIABLE CP

2Y/BW        .2990    .3640    .4270    .5340    .6730    .7800    .8870    .9720

  X/CW
    .010    -.3589   -.3779    .2700    .4876    .4282    .4589    .4107
    .020     .0300   -.0841    .3806    .3879    .3742    .3674    .3268   -.4530
    .040              -.0089    .3643
    .050    -.0409                      .2895    .2673    .2540    .2253
    .059                                                                     -.3356
    .090                                .2313
```

```
DATE 10 FEB 76              TABULATED PRESSURE DATA - OA148 ( AMES 11-073-1 )

                               AMES 11-073(OA148) -140A/B/C/R ORB LEFT WING BOT              (XEBL55)

ALPHA ( 4) =    8.030    BETA  ( 2) =      .173

 SECTION ( 1)LEFT WING BOT SURF              DEPENDENT VARIABLE CP

2Y/BW        .2990   .3640   .4270   .5340   .6730   .7800   .8870   .9720

  X/CW
   .031                      .2736
   .066              .2170
   .094      .0297
   .150                              .1784   .1770   .1683   .0765
   .157                                                              -.2418
   .163              .3092
   .177                      .1905
   .228      .1260
   .246              .1793
   .250                              .1379   .1233   .0940   .0053
   .274                      .1495
   .345                                                              -.2714
   .390              .1510
   .400                              .0739   .0664           -.0599
   .402                      .1126
   .513                                                              -.2892
   .550                             -.0440  -.0714
   .555                     -.6315
   .600                                                     -.2780
   .637             -.0337
   .650                                             -.2312
   .670                                                              -.6138
   [illegible]                                 -.2241
   .725                             -.1464
   .750                                             -.6026  -.5544
   .760                     -.1675
   .775                             -.7362  -.6172
   .793             -.1854
   .808                     -.7485
   .834     -.2025
   .839             -.6333
   .850                             -.6319  -.5281  -.9190
   .857                     -.6431
   .862                                                              -.5470
   .865     -.5970
   .879             -.5431
   .900     -.4170                  -.2759                  -.8320
   .905                     -.2693
   .919             -.2604
   .950                             -.1891  -.3224  -.4215
   .953                     -.1731
   .955             -.1481
   .965     -.1965
  1.000                     -.0862          -.1801          -.3149
```

REPRODUCIBILITY OF THE
ORIGINAL PAGE IS POOR

```
DATE 10 FEB 76            TABULATED PRESSURE DATA - OA148 ( AMES 11-073-1 )                                   PAGE 2507

                                    AMES 11-073(OA148) -140A/B/C/R ORB LEFT WING BOT                       (XEBL55)

ALPHA ( 4) =    8.015   BETA  ( 3) =    4.230   MACH   =  .3863    Q     =  599.02    P     =  1059.8    RN/L   =  3.5893

 SECTION ( 1)LEFT WING BOT SURF                DEPENDENT VARIABLE CP

2Y/BW       .2990    .3640    .4270    .5340    .6730    .7800    .8870    .9720

  X/CW
    .010   -.5279   -.3425    .1003    .4478    .3993    .3990    .3511
    .020    .0000   -.1651    .2622    .3765    .3555    .3473    .3026   -.5084
    .040            -.0908    .3127
    .050   -.1195                      .2898    .2603    .2456    .2156
    .059                                                                  -.3871
    .060                               .2332
    .081                      .2523
    .086             .1436
    .094   -.0319
    .150                               .1804    .1791    .1553    .0680
    .157                                                                  -.2379
    .163             .2773
    .177                      .1839
    .229    .0895
    .246             .1677
    .250                               .1286    .1133    .0891   -.0076
    .274                      .1436
    .345                                                                  -.2420
    .330             .1455
    .400                               .0634    .0523            -.0760
    .402                      .1003
    .503                                                                  -.2975
    .550                              -.0431   -.0764
    .565                     -.6990
    .600                                                         -.2656
    .637            -.0342
    .650                                                -.2249
    .670                                                                  -.5357
    .700                                       -.2181
    .725                              -.1582
    .750                                                -.6349   -.5535
    .760                     -.1908
    .775                              -.7465   -.6356
    .792            -.2036
    .806                     -.7187
    .834   -.2122
    .833            -.5908
    .850                              -.5582   -.5407   -.9361
    .857                     -.6400
    .862                                                                  -.5629
    .865   -.5815
    .879            -.5351
    .900   -.4110                     -.2994                     -.8659
    .905                     -.2808
    .919            -.3059
```

AMES 11-073(OA148) -140A/B/C/R ORB LEFT WING BOT (XE8LE5)

ALPHA (4) = 8.015 BETA (3) = 4.230

SECTION (1)LEFT WING BOT SURF DEPENDENT VARIABLE CP

2Y/BW	.2990	.3640	.4270	.5340	.6730	.7800	.8870	.9720
X/CW								
.950				-.2080	-.3172	-.5609		
.953			-.1513					
.955		-.1683						
.965	-.2401							
1.000			-.0530		-.1838		-.4077	

ALPHA (5) = 11.973 BETA (1) = -3.861 MACH = .89910 Q = 599.49 P = 1059.5 RN/L = 3.5850

SECTION (1)LEFT WING BOT SURF DEPENDENT VARIABLE CP

2Y/BW	.2990	.3640	.4270	.5340	.6730	.7800	.8870	.9720
X/CW								
.010	-.4661	-.5690	.2110	.6302	.6028	.5884	.5299	
.020	.0000	-.1382	.4153	.5708	.5648	.5552	.5066	-.3621
.040		-.0264	.4842					
.050	-.0210			.4706	.4609	.4509	.4184	
.069								-.2136
.080				.4064				
.081			.4085					
.086		.2800						
.094	.0825							
.150				.3288	.3327	.3257	.2401	
.157								-.1797
.163		.4146						
.177			.3219					
.229	.2031							
.246		.2982						
.250				.2672	.2589	.2304	.1530	
.274			.2696					
.345								-.1210
.390		.2552						
.400				.1805	.1746		.0617	
.402			.2112					
.503								-.2033
.550				.0480	.0192			
.565			-.5894					
.600							-.1700	
.637		.0459						
.650						-.1518		
.670								-.5187
.700					-.2052			
.725				-.1600				
.750						-.5002	-.5016	
.760			-.1953					

```
                                  AMES 11-073(OA148) -140A/B/C/R ORB LEFT WING BOT                (XE8L55)

ALPHA ( 5) =   11.973    BETA  ( 1) =   -3.861

 SECTION ( 1)LEFT WING BOT SURF              DEPENDENT VARIABLE CP

2Y/BW       .2990   .3640   .4270   .5340   .6730   .7800   .8870   .9720

  X/CW
    .775                            -.6533  -.6319
    .798            -.1932
    .808                    -.6639
    .834    -.2146
    .839            -.6396
    .850                            -.7933  -.6089  -.8387
    .857                    -.6960
    .862                                                            -.5684
    .865    -.6318
    .879            -.5506
    .900    -.3874                  -.7137                  -.8190
    .905                    -.6539
    .919            -.5905
    .950                            -.3005  -.6572  -.8245
    .953                    -.2159
    .955            -.1976
    .965    -.2671
   1.000                    -.1003          -.3706          -.4808
ALPHA ( 5) =   11.987    BETA  ( 2) =     .182   MACH   =  .89910    Q      =  599.49    P      =  1059.5    RN/L   =  3.5890

 SECTION ( 1)LEFT WING BOT SURF              DEPENDENT VARIABLE CP

2Y/BW       .2990   .3640   .4270   .5340   .6730   .7800   .8870   .9720

  X/CW
    .010    -.6877  -.4130  -.0021   .5444   .5210   .4754   .4172
    .020     .0000  -.2056   .2634   .5236   .5150   .4945   .4289  -.5199
    .040            -.1146   .4095
    .050    -.1149                   .4457   .4414   .4139   .3646
    .069                                                            -.3511
    .080                             .3836
    .081                     .3751
    .086             .1903
    .094     .0109
    .150                             .3120   .3221   .3018   .2077
    .157                                                            -.2392
    .163             .3693
    .177                     .3091
    .229     .1645
    .246             .2745
    .250                             .2517   .2372   .2136   .1201
    .274                     .2574
    .345                                                            -.2018
    .390             2395
```

```
                         AMES (11-073(OA148) -140A/B/C/R ORB LEFT WING BOT           (XE8L55)
ALPHA ( 5) =    11.987    BETA  ( 2) =     .182

 SECTION ( 1)LEFT WING BOT SURF               DEPENDENT VARIABLE CP

2Y/BW        .2990   .3640   .4270   .5340   .6730   .7800   .8870   .9720

  X/CW
   .400                              .1675   .1543           .0255
   .402                      .2025
   .503                                                              -.2637
   .550                              .0439   .0105
   .565                     -.6337
   .600                                                     -.2011
   .637              .0392
   .650                                             -.1664
   .670                                                              -.5482
   .700                                     -.2072
   .725                             -.1706
   .750                                             -.5473  -.5192
   .760                     -.2174
   .775                             -.6547  -.6541
   .798             -.2057
   .809                     -.6500
   .834     -.2165
   .839             -.6135
   .850                             -.7881  -.6326  -.9089
   .957                     -.6552
   .862                                                             -.6168
   .865     -.6136
   .879             -.5326
   .900     -.3874                  -.7421                  -.8106
   .905                     -.6792
   .919             -.5716
   .940                             -.3161  -.5787  -.8171
   .943                     -.2797
   .955             -.2317
   .965     -.3443
  1.000                     -.1160          -.3234          -.5111
ALPHA ( 5) =   12.005    BETA  ( 3) =    4.250   MACH  =  .89910     Q    =  599.49    P    =  1059.5    RN/L  =  3.5890

 SECTION ( 1)LEFT WING BOT SURF               DEPENDENT VARIABLE CP

2Y/BW        .2990   .3640   .4270   .5340   .6730   .7800   .8870   .9720

  X/CW
   .010     -.7957  -.3854  -.2186   .4380   .4208   .3537   .2979
   .020      .0000  -.3063   .0958   .4589   .4481   .4201   .3528  -.6723
   .040             -.2212   .3242
   .050     -.2162                   .4103   .4039   .3716   .3208
   .069                                                             -.4881
   .080                              .3559
```

```
DATE 10 FEB 76              TABULATED RRESSURE DATA - OA148 ( AMES 11-073-1 )                                       PAGE 2511

                                      AMES 11-073(OA148) -140A/B/C/R ORB LEFT WING BOT                 (XEBL55)

ALPHA ( 5) =    12.005    BETA  ( 3) =    4.250

 SECTION ( 1)LEFT WING BOT SURF                DEPENDENT VARIABLE CP

2Y/BW        .2990   .3640   .4270   .5340   .6730   .7800   .8870   .9720

  X/CW
    .081                     .3351
    .085             .1025
    .094    -.0675
    .150                             .2841   .2920   .2804   .1717
    .157                                                            -.3085
    .163             .3111
    .177                     .2918
    .229     .1039
    .246             .2414
    .250                             .2335   .2186   .1958   .0933
    .274                     .2436
    .345                                                            -.2629
    .390             .2291
    .400                             .1497   .1388           .0005
    .402                     .1861
    .503                                                            -.3193
    .550                             .0272  -.0016
    .565                    -.6058
    .600                                                    -.2297
    .637             .0339
    .650                                            -.1803
    .670                                                            -.6086
    .700                                    -.2139
    .725                            -.1891
    .750                                            -.6119  -.5413
    .760                    -.2517
    .775                            -.6679  -.6851
    .793            -.2546
    .808                    -.6382
    .634    -.2294
    .839            -.5832
    .850                            -.7779  -.6749  -.9295
    .857                    -.5989
    .852                                                            -.6654
    .865    -.6056
    .879            -.5279
    .900    -.4032                  -.8334                  -.8352
    .905                    -.6694
    .919            -.5700
    .950                            -.3146  -.5480  -.8378
    .953                    -.3044
    .955            -.2805
    .965    -.3722
   1.000                    -.1147          -.2956          -.5240
```

DATE 10 FEB 76 TABULATED PRESSURE DATA - OA148 (AMES 11-073-1)

AMES 11-073(OA148) -140A/B/C/R ORB LEFT WING BOT (XEBL56) (05 AUG 75

REFERENCE DATA

SPEF = 2690.0000 SQ.FT.
LREF = 474.8000 IN.
BREF = 936.0680 IN.
SCALE = .0300
XMRP = 1076.6800 IN. XO
YMRP = .0000 IN. YO
ZMRP = 375.0000 IN. ZO

PARAMETRIC DATA

RUDDER = -10.000
BDFLAP = 16.300
R-ELVN = 4.000
SPDBRK = 55.000
L-ELVN = -4.000
MACH = .600

ALPHA (1) = -4.044 BETA (1) = -7.862 MACH = .59674 Q = 594.66 P = 2385.6 RN/L = 4.8797

SECTION (1)LEFT WING BOT SURF DEPENDENT VARIABLE CP

2Y/BW	.2390	.3640	.4270	.5340	.6730	.7800	.8870	.9720
X/CW								
.010	-.3097	-.6871	-1.1295	-2.1053	-1.8116	-1.5961	-1.5308	
.020	.0000	-.6055	-1.2003	-1.9244	-1.6993	-1.3532	-1.3784	-1.1216
.040		-.5590	-1.0086					
.050	-.2558			-.9569	-1.1691	-1.1782	-1.1438	
.069								-1.0003
.080				-.7463				
.081			-.6355					
.086		-.3590						
.094	-.2303							
.150				-.4865	-.5334	-.6416	-.6195	
.157								-.3764
.163		-.3878						
.177			-.3956					
.229	-.1851							
.246		-.3855						
.250				-.3296	-.3788	-.4247	-.4254	
.274			-.2864					
.345								-.4207
.390		-.2502						
.400				-.2430	-.2632		-.3168	
.402			-.1996					
.503								-.4378
.550				-.2613	-.2794			
.565			-.2129					
.600							-.3423	
.637		-.2365						
.650						-.3134		
.670								-.5205
.700					-.3198			
.725				-.2746				
.750						-.5215	-.4871	
.760			-.2779					
.775				-.6714	-.4077			
.798		-.2943						
.808			-.5712					
.834	-.2434							
.839		-.3733						
.850				-.3263	-.3330	-.2508		

```
                        AMES 11-073(OA148) -140A/B/C/R ORB LEFT WING BOT               (XE8L56)

ALPHA ( 1) =   -4.044   BETA  ( 1) =   -7.862

 SECTION ( 1)LEFT WING BOT SURF              DEPENDENT VARIABLE CP

2Y/BW        .2990   .3640   .4270   .5340   .6730   .7800   .8870   .9720

 X/CW
   .857                      -.2815
   .862
   .865   -.3735                                                     -.3808
   .879           -.2510
   .900   -.1953                     -.2027                  -.2066
   .905                      -.1682
   .919           -.1516
   .950                              -.0862  -.3104  -.0868
   .953                      -.0593
   .955           -.0553
   .965   -.0630
  1.000                       .0116          -.0625          -.0198
ALPHA ( 1) =   -3.971   BETA  ( 2) =   -3.856  MACH   =  .59674    Q     =  59..56    P     =  2385.6    RN/L  =  4.8797
 SECTION ( 1)LEFT WING BOT SURF              DEPENDENT VARIABLE CP

2Y/BW        .2990   .3640   .4270   .5340   .6730   .7800   .8870   .9720

 X/CW
   .010   -.1958  -.4415  -.8309 -2.0650 -2.1020 -1.8000 -1.6276
   .020    .0000  -.3936  -.8941 -1.8157 -1.9329 -1.4407 -1.5909  -.9622
   .040           -.3605  -.7759
   .050   -.1691                  -.8891  -.9779 -1.1228 -1.1328
   .069                                                           -.8633
   .090                           -.6690
   .081                   -.5408
   .086           -.2416
   .094   -.1625
   .150                           -.4249  -.4740  -.5343  -.5491
   .157                                                           -.3369
   .163           -.2885
   .177                   -.3551
   .229   -.1229
   .246           -.3291
   .250                           -.2957  -.3464  -.3813  -.3921
   .274                   -.2634
   .345                                                           -.3803
   .370           -.2317
   .400                           -.2311  -.2483          -.2934
   .402                   -.1945
   .503                                                           -.3786
   .550                           -.2538  -.2683
   .565                   -.1922
   .600                                                   -.3263
```

DATE 10 FEB 76 TABULATED PRESSURE DATA - OA148 (AMES 11-073-1)

AMES 11-073(OA148) -140A/B/C/R ORB LEFT WING BOT (XEBL56)

ALPHA (1) = -3.971 BETA (2) = -3.856

SECTION (1)LEFT WING BOT SURF DEPENDENT VARIABLE CP

2Y/BW	.2990	.3640	.4270	.5340	.6730	.7800	.8870	.9720
X/CW								
.637		-.2307						
.650						-.3068		
.670								-.4693
.700					-.3142			
.725				-.2733				
.750						-.5227	-.4802	
.760			-.2772					
.775				-.7013	-.4109			
.799		-.2925						
.808			-.5814					
.834	-.2460							
.839		-.3835						
.850				-.3293	-.3215	-.2645		
.857			-.2940					
.862								-.3963
.865	-.3975							
.879		-.2644						
.900	-.2329			-.2018			-.1991	
.905			-.1765					
.919		-.1704						
.930				-.0848	-.2735	-.0880		
.950			-.0699					
.955		-.0854						
.965	-.0945							
1.000			.0018		-.0273		-.0033	

ALPHA (1) = -3.944 BETA (3) = .179 MACH = .59674 Q = 594.66 P = 2385.6 RN/L = 4.8797

SECTION (1)LEFT WING BOT SURF DEPENDENT VARIABLE CP

2Y/BW	.2990	.3640	.4270	.5340	.6730	.7800	.8870	.9720
X/CW								
.010	-.0949	-.2313	-.5738	-1.8102	-1.9702	-2.1737	-1.9471	
.020	.0000	-.2046	-.6335	-1.3776	-1.5610	-1.6072	-1.7982	-.8261
.040		-.1810	-.5773					
.050	-.0997			-.7739	-.8653	-.9854	-1.0748	
.069								-.6452
.080				-.5872				
.091			-.4391					
.085		-.1322						
.094	-.0966							
.150				-.3765	-.4261	-.4775	-.4815	
.157								-.2981
.163		-.1961						

REPRODUCIBILITY OF THE
ORIGINAL PAGE IS POOR

AMES 11-073(OA148) -140A/B/C/R ORB LEFT WING BOT (XEBL56)

ALPHA (1) = -3.944 BETA (3) = .179

SECTION (1)LEFT WING BOT SURF DEPENDENT VARIABLE CP

2Y/BW	.2990	.3640	.4270	.5340	.6730	.7800	.8870	.9720
X/CW								
.177			-.3119					
.229	-.0739							
.246		-.2698						
.250				-.2709	-.3217	-.3510	-.3473	
.274			-.2390					
.345								-.3511
.390		-.2068						
.400				-.2170	-.2402		-.2727	
.402			-.1869					
.503								-.3697
.550				-.2444	-.2637			
.565			-.1753					
.600							-.3071	
.637		-.2200						
.650						-.3014		
.670								-.4712
.700					-.3156			
.725				-.2705				
.750						-.5094	-.4748	
.760			-.2807					
.775				-.7260	-.4191			
.798		-.3015						
.808			-.5781					
.834	-.2533							
.839		-.3819						
.850				-.3258	-.3022	-.2615		
.857			-.3033					
.852								-.3978
.855	-.4092							
.879		-.2768						
.900	-.2595			-.2034			-.1840	
.905			-.1886					
.919		-.1938						
.950				-.0893	-.2190	-.0799		
.953			-.0817					
.955		-.1090						
.965	-.1556							
1.000			.0052		-.0123		-.0015	

DATE 10 FEB 76 TABULATED PRESSURE DATA - OA148 (AMES 11-073-1)

AMES 11-073(OA148) -140A/B/C/R ORB LEFT WING BOT (XEBL56)

ALPHA (1) = -3.952 BETA (4) = 4.259 MACH = .59674 Q = 594.66 P = 2385.6 RN/L = 4.8797

SECTION (1)LEFT WING BOT SURF DEPENDENT VARIABLE CP

2Y/BW	.2930	.3540	.4270	.5340	.6730	.7800	.8870	.9720
X/CW								
.010	-.0419	-.0940	-.3528	-1.4373	-1.6052	-2.0384	-1.9201	
.020	.0000	-.0784	-.4068	-1.1216	-1.2646	-1.4275	-1.7363	-.6711
.040		-.0671	-.4215					
.050	-.0511			-.6550	-.7358	-.8366	-.8767	
.069								-.5014
.090				-.5028				
.061			-.3486					
[illegible]		-.0473						
[illegible]	-.0556							
[illegible]				-.3264	-.3755	-.4016	-.4245	
[illegible]								-.2671
[illegible]		-.1205						
[illegible]			-.2500					
[illegible]	-.0393							
[illegible]		-.2159						
[illegible]				-.2418	-.2885	-.3140	-.3161	
[illegible]			-.2082					
[illegible]								-.2807
.390		-.1781						
.400				-.2017	-.2142		-.2406	
[illegible]			-.1688					
[illegible]								-.3015
[illegible]				-.2348	-.2497			
[illegible]			-.1878					
[illegible]							-.2870	
[illegible]		-.2102						
[illegible]						-.2887		
[illegible]								-.3934
[illegible]					-.3054			
[illegible]				-.2673				
[illegible]						-.4878	-.4621	
.760			-.2816					
.775				-.7199	-.4028			
.798		-.2936						
.803			-.5514					
.834	-.2583							
.839		-.3795						
[illegible]				-.3157	-.2758	-.2557		
.857			-.2904					
.862								-.2979
.865	-.4103							
.879		-.2792						
[illegible]	-.2675			-.1888			-.1616	
[illegible]			-.1870					
.919		-.1380						

AMES 11-073(OA148) -140A/B/C/R ORB LEFT WING BOT (XEBL56)

ALPHA (1) = -3.952 BETA (4) = 4.259

SECTION (1)LEFT WING BOT SURF DEPENDENT VARIABLE CP

2Y/BW	.2910	.3640	.4270	.5340	.6730	.7800	.8870	.9720
X/CW								
.950				-.0770	-.1704	-.0731		
.953			-.0811					
.955		-.1113						
.965	-.2118							
1.000			-.0006		.0043		.0076	

ALPHA (1) = -3.967 BETA (5) = 8.330 MACH = .59674 Q = 594.66 P = 2395.6 RN/L = 4.8797

SECTION (1)LEFT WING BOT SURF DEPENDENT VARIABLE CP

2Y/BW	.2930	.3640	.4270	.5340	.6730	.7800	.8870	.9720
X/CW								
.010	-.0216	.0145	-.1239	-1.0297	-1.3004	-1.6711	-.6287	
.020	.0000	.0179	-.1862	-.8548	-.9671	-1.11	-.4312	-.5309
.040		.0214	-.2532					
.050	-.0243			-.5135	-.6074	-.7205	-.7704	
.069								-.3341
.080				-.4020				
.091			-.2444					
.106		.0174						
[illegible]	-.0264							
.150				-.2813	-.3199	-.3462	-.3817	
.157								-.2395
.163		-.0529						
.177			-.2059					
.204	-.0162							
.246		-.1638						
.250				-.2075	-.2562	-.2815	-.2785	
.274			-.1774					
[illegible]								-.2372
[illegible]		-.1541						
[illegible]				-.1821	-.1955		-.2189	
[illegible]			-.1523					
.513								-.2479
[illegible]				-.2203	-.2333			
[illegible]			-.2074					
[illegible]							-.2686	
.637		-.2032						
[illegible]						-.2716		
[illegible]								-.3195
[illegible]					-.2907			
[illegible]				-.2602				
[illegible]						-.4716	-.4336	
[illegible]			-.2769					

```
                     AMES 11-073(OA148) -140A/B/C/R CRB LEFT WING BOT               (XEBL56)

ALPHA ( 1) =   -3.357    BETA  ( 5) =     8.330

 SECTION ( 1) LEFT WING BOT SURF             DEPENDENT VARIABLE CP

 2Y/BW       .2390   .3640   .4270   .5340   .6730   .7800   .8870   .9720

   X/CW
    .775                                  .7101  -.3844
    .789            -.2860
    .818                    -.5254
    .834    -.2547
    .839            -.3941
    [illegible]                           -.2966  -.2444  -.2629
    [illegible]             -.2329
    [illegible]                                                           -.2040
    [illegible] -.4160
    [illegible]     [illegible]
    [illegible] -.2806                   -.1712                  -.1311
    [illegible]             -.1835
    [illegible]     -.2190
    [illegible]                           -.0626  -.1167  -.0549
    [illegible]             -.0363
    [illegible]     -.1255
    [illegible]  .0439
   1.000                     .0104           .0289           .0122
ALPHA ( 2) =      .082    BETA  ( 1) =   -7.901    MACH   =  .59728    Q      =  595.74    P      =  2395.5    RN/L   =  4.8915
 SECTION ( 1)LEFT WING BOT SURF             DEPENDENT VARIABLE CP

 2Y/BW       .2390   .3540   .4270   .5340   .6730   .7800   .8970   .9720

   X/CW
    .010    -.0074  -.0342  -.1795  -.3569 -1.0073  -.9859  -.8255
    .020     .0000  -.0763  -.3039  -.8555  -.7760  -.8632  -.8851  -.2811
    .040            -.0533  -.3793
    .050    -.0497                  -.5125  -.5192  -.5637  -.5575
    .059                                                           -.2467
    .080                            -.4027
    .081                    -.3044
    .085            -.0435
    .094    -.0637
    .150                            -.2456  -.2528  -.2579  -.   1
    .157                                                           -.1900
    .163            -.1276
    .177                    -.2042
    .229    -.0542
    .246            -.1948
    .257                            -.1650  -.2021  -.2140  -.2183
    .274                    -.1457
    .300                                                           -.2102
    .340            -.1286
```

```
                                        AMES 11-073(OA148) -140A/B/C/R ORB LEFT WING BOT                (XEBL56)

ALPHA ( 2) =      .092    BETA  ( 1) =   -7.901

 SECTION ( 1)LEFT WING BOT SURF                DEPENDENT VARIABLE CP

2Y/BW        .2990   .3640   .4270   .5340   .6730   .7800   .8870   .9720

  X/CW
   .400                           -.1377  -.1545          -.1858
   .402                   -.1070
   .503                                                           -.2644
   .550                           -.1936  -.2071
   [illegible]            -.2544
   .600                                                   -.2638
   [illegible]    -.1841
   .650                                           -.2615
   .670                                                           -.3418
   [illegible]                            -.2813
   [illegible]                    -.2423
   [illegible]                                    -.5133  -.4597
   [illegible]            -.2475
   [illegible]                    -.5751  -.3923
   [illegible]    -.2704
   [illegible]            -.5526
   [illegible] -.2295
   [illegible]    -.3714
   [illegible]                    -.3182  -.3105  -.2390
   [illegible]            -.2594
   [illegible]                                                    -.2010
   [illegible] -.3729
   [illegible]    -.2423
   [illegible] -.1774             -.1912                  -.1504
   [illegible]            -.1566
   [illegible]    -.1427
   [illegible]                    -.0610  -.2573  -.0574
   [illegible]            -.0485
   [illegible]    -.0548
   [illegible] -.0473
  1.000                    .0352          -.0518           .0324

ALPHA ( 2) =      .093    BETA  ( 2) =   -3.873   MACH   =  .59728     Q      =  595.74     P      =  2385.6    RN/L   =  4.8905

 SECTION ( 1)LEFT WING BOT SURF                DEPENDENT VARIABLE CP

2Y/BW        .2990   .3640   .4270   .5340   .6730   .7800   .8870   .9720

  X/CW
   [illegible] .0184   .0793  -.0246  -.7355  -.8364  -.8293  -.7077
   [illegible] 0000    .0075  -.1431  -.7017  -.6476  -.7169  -.7624  -.2370
   .040                .0166  -.2506
   [illegible] -.0195                 -.4230  -.4419  -.4870  -.5021
   [illegible]                                                        -.2106
   [illegible]                        -.3439
```

AMES 11-073(OA148) -140A/B/C/R ORB LEFT WING BOT (XEBL55)

ALPHA (2) = 093 BETA (2) = -3.873

SECTION (1)LEFT WING BOT SURF DEPENDENT VARIABLE CP

2Y/BW X/CW	.2930	.3540	.4270	.5340	.6730	.7800	.8870	.9720
.081			-.2317					
[illegible]		.0204						
.094	-.0313							
[illegible]				-.2173	-.2279	-.2322	-.2518	
[illegible]								-.1903
[illegible]		-.0533						
[illegible]			-.1662					
[illegible]	-.0171							
[illegible]		-.1525						
[illegible]				-.1454	-.1892	-.2049	-.2073	
[illegible]			-.1329					
[illegible]								-.1984
[illegible]		-.1141						
[illegible]				-.1348	-.1491		-.1811	
[illegible]			-.1026					
[illegible]								-.2507
[illegible]				-.1916	-.2051			
.555			-.2328					
[illegible]							-.2653	
[illegible]		-.1819						
[illegible]						-.2649		
[illegible]								-.3143
[illegible]					-.2857			
[illegible]				-.2452				
[illegible]						[illegible]	-.4633	
[illegible]			-.2549					
[illegible]				-.6993	-.4017			
.793		-.2762						
.803			-.5716					
.834	-.2294							
.849		-.3791						
.850				-.3167	-.3005	-.2527		
.857			-.2945					
.862								-.1719
[illegible]	-.3885							
.879		-.2829						
.900	-.2141			-.2001			-.1429	
[illegible]			-.1705					
.919		-.1630						
[illegible]				-.0703	-.2590	-.0685		
.955			-.0601					
[illegible]		[illegible]						
[illegible]	-.0655							
1.000			.0155		-.0069		.0278	

```
DATE 10 FEB 76            TABULATED PRESSURE DATA - OA148 ( AMES 11-073-1 )                                    PAGE 2521

                                  AMES 11-073(OA148) -140A/B/C/R ORB LEFT WING BOT                (XE8L56)

ALPHA ( 2) =     .095   BETA  ( 3) =     .179   MACH   =  .59728    Q      =  595.74    P      =  2385.6    RN/L   =  4.8906

 SECTION ( 1)LEFT WING BOT SURF               DEPENDENT VARIABLE CP

2Y/BW        .2990    .3640    .4270    .5340    .6730    .7800    .8870    .9720

  X/CW
    .010     .0105    .0663    .0837   -.5526   -.6479   -.6817   -.6342
    .020     .0000    .0536   -.0059   -.5313   -.5356   -.5862   -.6668   -.2179
    .040              .0703   -.1334
    .050    -.0078                     -.3411   -.3598   -.4336   -.4571
    .069                                                                  -.2019
    .080                               -.2765
    .081                      -.1677
    .085              .0555
    [illegible] -.0101
    [illegible]                        -.1843   -.1961   -.2170   -.2389
    [illegible]                                                           -.1861
    .163             -.0057
    [illegible]               -.1405
    .229     .0015
    .248             -.1205
    .250                               -.1380   -.1724   -.1954   -.2035
    .274                      -.1163
    .343                                                                  -.1872
    .390             -.0991
    .400                               -.1304   -.1466            -.1830
    .492                      -.1000
    .503                                                                  -.2363
    .550                               -.1833   -.2013
    .575                      -.2057
    .610                                                          -.2618
    .637             -.1743
    .650                                                 -.2648
    .670                                                                  -.2851
    .700                                        -.2868
    .725                               -.2450
    .750                                                 -.4973   -.4561
    .760                      -.2578
    .775                               -.7323   -.3949
    .798             -.2774
    .819                      -.5711
    .844    -.2351
    .847             -.3793
    .850                               -.3191   -.2824   -.2624
    .857                      -.2980
     882                                                                  -.1420
    .885    -.3977
    .878             -.2735
    .900    -.2459                     -.1989                     -.1295
     905                      -.1692
    .919             -.1924
```

```
                                        AMES 11-073(OA148) -140A/B/C/R ORB LEFT WING BOT                  (XE8L56)

ALPHA ( 2) =      .095    BETA  ( 3) =     .179

 SECTION ( 1)LEFT WING BOT SURF                DEPENDENT VARIABLE CP

2Y/BW        .2990   .3640   .4270   .5340   .6730   .7800   .8870   .9720

  X/CW
   .950                              -.0700  -.2031  -.0642
   .953                      -.0771
   .955              -.1033
   .965      -.1515
  1.000                       .0194           .0163           .0333

ALPHA ( 2) =      .092    BETA  ( 4) =     4.242   MACH   =  .59728     Q      =  595.74     P      =  2385.6     RN/L   =  4.8906

 SECTION ( 1)LEFT WING BOT SURF                DEPENDENT VARIABLE CP

2Y/BW        .2990   .3640   .4270   .5340   .6730   .7800   .8870   .9720

  X/CW
   .010     -.0306    .0479   .1531  -.3512  -.4702  -.4807  -.4291
   .020      .0000    .0575   .0839  -.3789  -.3871  -.4458  -.4973  -.1819
   .040               .0776  -.0555
   .050     -.0114                   -.2550  -.2918  -.3397  -.3572
   .059                                                              -.1796
   .060                              -.2200
   .081                      -.1081
   .086               .0856
   .094     -.0117
   .150                              -.1506  -.1659  -.1760  -.2133
   .157                                                              -.1824
   .163               .0305
   .177                      -.1111
   .229      .0120
   .246              -.0890
   .250                              -.1186  -.1504  -.1720  -.1855
   .274                      -.0991
   .345                                                              -.1722
   .390              -.0819
   .400                              -.1205  -.1342          -.1683
   .402                      -.0943
   .503                                                              -.2230
   .550                              -.1819  -.1966
   .565                      -.2294
   .600                                                      -.2550
   .637              -.1721
   .650                                              -.2555
   .670                                                              -.2639
   .700                                      -.2763
   .725                              -.2443
   .750                                              -.4929  -.4474
   .760                      -.2602
```

AMES 11-073(OA148) -140A/B/C/R ORB LEFT WING BOT (XEBL56)

ALPHA (2) = .092 BETA (4) = 4 242

SECTION (1)LEFT WING BOT SURF DEPENDENT VARIABLE CP

2Y/BW	.2990	.3640	.4270	.5340	.6730	.7800	.8870	.9720
X/CW								
.775				-.7293	-.3876			
.798		-.2768						
.808			-.5547					
.834	-.2424							
.839		-.3774						
.850				-.3113	-.2681	-.2748		
.857			-.2990					
.862								-.1112
.865	-.3955							
.879		-.2795						
.900	-.2557			-.1868			-.1275	
.905			-.1938					
.919		-.2030						
.950				-.0674	-.1509	-.0586		
.953			-.0836					
.955		-.1163						
.965	-.2119							
1.000			.0147		.0310		.0447	

ALPHA (2) = .089 BETA (5) = 8.298 MACH = .59728 Q = 595.74 P = 2385.6 RN/L = 4.8906

SECTION (1)LEFT WING BOT SURF DEPENDENT VARIABLE CP

2Y/BW	.2990	.3640	.4270	.5340	.6730	.7800	.8870	.9720
X/CW								
.010	-.1134	-.0353	.1945	-.1620	-.2916	-.3297	-.3088	
.020	.0000	.0109	.1599	-.2257	-.2619	-.3281	-.3802	-.1672
.040		.0352	.0302					
.050	-.0414			-.1561	-.2148	-.2642	-.2906	
[illegible]								-.1958
.080				-.1499				
.081			-.0460					
.086		.0875						
.094	-.0284							
.150				-.1199	-.1341	-.1486	-.1947	
.157								-.1757
.163		.0649						
.177			-.0751					
.229	.0038							
.246		-.0626						
.250				-.1061	-.1371	-.1538	-.1743	
.274			-.0773					
.345								-.1684
.390		-.0655						

```
DATE 10 FEB 76            TABULATED PRESSURE DATA - OA148 ( AMES 11 073-1 )                                            PAGE 2524

                                AMES 11-073(OA148) -140A/B/C/R ORB LEFT WING BOT                    (XEBL56)

ALPHA ( 2) =     .089    BETA  ( 5) =     8.298

 SECTION  ( 1)LEFT WING BOT SURF                    DEPENDENT VARIABLE CP

2Y/BW       .2990    .3640    .4270    .5340    .6730    .7800    .8870    .9720

  X/CW
    .400                               -.1115   -.1237            -.1601
    .402                      -.0851
    .503                                                                   -.2105
    .550                               -.1756   -.1877
[illegible]                   -.2518
[illegible]                                                       -.2413
[illegible]          -.1611
[illegible]                                              -.2477
    .670                                                                   -.2411
[illegible]                                     -.2711
[illegible]                            -.2470
[illegible]                                              -.4694   -.4331
[illegible]                   -.2639
[illegible]                            -.7191   -.3743
    .798             -.2719
    .809                      -.5264
[illegible] -.2457
[illegible]          -.3747
[illegible]                            -.2981   -.2356   -.2779
    .857                      -.3016
[illegible]                                                                -.0777
    .865    -.4046
    .879             -.2872
    .900    -.2711                     -.1916                     -.1123
[illegible]                   -.1953
    .919             -.2101
    .950                               -.0613   -.1077   -.0495
    .953                      -.0841
    .955             -.1276
    .955    -.2493
   1.000                       .0174             .0425             .0395
ALPHA ( 3) =    4.036    BETA  ( 1) =   -7.914   MACH   =  .59696    Q     =  595.02    P     =  2385.3    RN/L   =  4.6897

 SECTION  ( 1)LEFT WING BOT SURF                    DEPENDENT VARIABLE CP

2Y/BW       .2990    .3640    .4270    .5340    .6730    .7800    .8870    .9720

  X/CW
    .010     .0834    .1502    .7155   -.0379   -.0214    .0969    .1621
    .020     .0000    .1471    .2193   -.1360   -.0476   -.0362   -.0051    .0139
    .040              .1592    .0309
[illegible] [illegible]                -.1157  [illegible] -.0517  -.0514
[illegible]                                                                -.0226
[illegible]                            -.0952
```

```
DATE 10 FEB 76              TABULATED PRESSURE DATA - OA148 ( AMES 11-073-1 )                                        PAGE 2525

                                   AMES 11-073(OA148) -140A/B/C/R ORB LEFT WING BOT                      (XE8L56)
ALPHA ( 3) =    4.036    BETA  ( 1) =   -7.914

 SECTION ( 1)LEFT WING BOT SURF                DEPENDENT VARIABLE CP

2Y/BW       .2900    .3640    .4270    .5340    .6730    .7800    .8870    .9720

 X/CW
  .081                      -.0289
  .086               .1568
  .094      .0497
  .150                               -.0421   -.0377   -.0249   -.0507
  .157                                                                    -.1172
  .163               .0815
  .177                      -.0294
  .229      .0526
  .246              -.0342
  .250                               -.0245   -.0464   -.0589   -.0671
  .274                      -.0213
  .345                                                                    -.1013
  .395              -.0224
  .400                               -.0457   -.0574            -.0922
  .402                      -.0159
  .503                                                                    -.1894
  .550                               -.1286   -.1426
  .565                      -.2851
  .600                                                          -.2254
  .637              -.1279
  .650                                                 -.2213
  .670                                                                    -.2782
  .700                                        -.2536
  .725                               -.2072
  .750                                                 -.5136   -.4389
  .760                      -.2226
  .775                               -.6788   -.3754
  .788              -.2473
  .808                      -.5509
  .844     -.2085
  .849              -.3534
  .850                               -.3092   -.2936   -.2579
  .857                      -.2627
  .862                                                                    -.1673
  .865     -.3721
  .879              -.2324
  .900     -.1615                    -.1913                     -.1712
  .913                      -.1579
  .919              -.1437
  .950                               -.0532   -.2280   -.0641
  .953                      -.0463
  .955              -.0503
  .965     -.0432
 1.000                       .0525             .0216             .0522
```

AMES 11-073(OA148) -140A/B/C/R ORB LEFT WING BOT (XE8L56)

AL A (3) = 4.041 BETA (2) = -3.873 MACH = .59696 Q = 595.02 P = 2385.3 RN/L = 4.6897

SECTION (1)LEFT WING BOT SURF DEPENDENT VARIABLE CP

2Y/BW	.2930	.3640	.4270	.5340	.6730	.7800	.8870	.9720
Y/CW								
.010	.0205	.0746	.3317	.0781	.0557	.1681	.1973	
.020	.0000	.1193	.2694	-.0450	.0231	.0292	.0493	-.0576
.040		.1427	.0994					
.050	.0469			-.0430	-.0372	-.0348	-.0192	
.063								-.0763
.080				-.0432				
.081			.0166					
.085		.1656						
.094	.0455							
.150				-.0252	-.0173	-.0140	-.0517	
.157								-.1379
.163		.1202						
.177			-.0042					
.220	.0619							
.246		-.0059						
.250				-.0142	-.0408	-.0511	-.0718	
.274			-.0075					
.345								-.1278
.390		-.0059						
.400				-.0477	-.0591		-.0976	
.422			-.0168					
.500								-.2064
.550				-.1288	-.1441			
.565			-.2652					
.600							-.2324	
.637		-.1217						
.650						-.2282		
.670								-.2827
.700					-.2577			
.725				-.2188				
.750						-.5113	-.4510	
.760			-.2346					
.775				-.7065	-.3878			
.798		-.2557						
.808			-.5590					
.834	-.2131							
.839		-.3611						
.850				-.3146	-.2885	-.2844		
.857			-.2771					
.862								-.1656
.865	-.3781							
.879		-.2517						
.890	-.2010			-.1974			-.1753	
.905			-.1733					
.919		-.1581						

REPRODUCIBILITY OF THE ORIGINAL PAGE IS POOR

```
                                 AMES 11-073(OA148) -140A/B/C/R ORB LEFT WING BOT                    (XEBL56)
ALPHA ( 3) =    4.041    BETA  ( 2) =   -3.873
 SECTION ( 1)LEFT WING BOT SURF                DEPENDENT VARIABLE CP
2Y/BW       .2990   .3640   .4270   .5340   .6730   .7800   .8870   .9720
  X/CW
   .950                             -.0642  -.2234  -.0629
   .953                     -.0567
   .955             -.0739
   .965    -.0925
  1.000                      .0412           .0456           .0540
ALPHA ( 3) =    4.096    BETA  ( 3) =     .178   MACH  =  .59696    Q     =  595.02    P     =  2385.3    RN/L   =  4.8897
 SECTION ( 1)LEFT WING BOT SURF                DEPENDENT VARIABLE CP
2Y/BW       .2990   .3640   .4270   .5340   .6730   .7800   .8870   .9720
  X/CW
   .010    -.0853  -.0507   .2999   .1561   .1154   .2010   .1924
   .020     .0000   .0442   .2852   .0379   .0680   .0629   .0654  -.1345
   .040             .0876   .1518
   .050     .0041                   .0103  -.0080  -.0081  -.0113
   .060                                                            -.1394
   .080                            -.0072
   .091                     .0516
   .086             .1570
   .094     .0212
   .150                            -.0067  -.0135  -.0104  -.0574
   .157                                                            -.1617
   .162             .1426
   .177                     .0127
   [illegible] .0541
   [illegible]      .0109
   .250                            -.0109  -.0335  -.0529  -.0775
   .274                    -.0054
   .345                                                            -.1621
   .390            -.0007
   .400                            -.0493  -.0599          -.1127
   .402                    -.0206
   [illegible]                                                     -.2236
   .550                            -.1289  -.1468
   .565                    -.2539
   .600                                                    -.2425
   .637            -.1192
   .650                                            -.2289
   .670                                                             .2872
   .700                                    -.2557
   .725                            -.2167
   .750                                            -.5023  -.4580
   .760                    -.2373
```

```
                                       AMES 11-073(OA148) -140A/B/C/R ORB LEFT WING BOT          (XE8L56)

ALPHA ( 3) =     4.095    BETA  ( 3) =     .178

 SECTION ( 1)LEFT WING BOT SURF              DEPENDENT VARIABLE CP

2Y/BW        .2990   .3640   .4270   .5340   .6730   .7800   .8870   .9720

  X/CW
    .775                             -.7241  -.3843
    .798             -.2548
    .809                     -.5518
    .8[illegible]    -.2180
    .[illegible]3            -.3642
    .84[illegible]                           -.3161  -.2731  -.2973
    .84[illegible]                   -.2689
    .842                                                             -.1517
    .864     -.3846
    .878             -.2632
    .900     -.2267                  -.1901                  -.1699
    .905                     -.1874
    .913             -.1860
    .940                             -.0667  -.1776  -.0526
    .943                     -.0747
    .945             -.0977
    .945     -.1532
   1.000                      .0362           .0594           .0538
ALPHA ( 3) =     3.977    BETA  ( 4) =     4.232   MACH   =  .59696     Q      =  595.02     P      =  2385.3     RN/L   =  4.8897

 SECTION ( 1)LEFT WING BOT SURF              DEPENDENT VARIABLE CP

2Y/BW        .2990   .3640   .4270   .5340   .6730   .7800   .8870   .9720

  X/CW
    .010     -.2083  -.2189   .2275   .2099   .1598   .2274   .2247
    .020      .0000  -.0552   .2581   .1024   .1048   .1080   .1103  -.2313
    .040             -.0112   .1718
    .050     -.0508                   .0462   .0304   .0245   .0142
    .069                                                             -.2327
    .080                              .0191
    .081                      .0756
    .086              .1213
    .094     -.0192
    .150                              .0018   .0042  -.0059  -.0541
    .157                                                             -.2027
    .163              .1437
    .177                      .0240
    .229      .0338
    .246              .0157
    .250                             -.0009  -.0312  -.0493  -.0883
    .274                      .0024
    .345                                                             -.1887
    .390              .0025
```

```
                              AMES 11-073(OA148) -140A/B/C/R ORB LEFT WING BOT             (XEBL58)

ALPHA ( 3) =    3.977    BETA  ( 4) =    4.232

 SECTION ( 1)LEFT WING BOT SURF            DEPENDENT VARIABLE CP

2Y/BW        .2990   .3640   .4270   .5340   .6730   .7800   .8870   .9720

  X/CW
   .400                             -.0453  -.0580          -.1165
   .402                     -.0187
   .503                                                             -.2523
   .550                             -.1304  -.1454
   .565                     -.2585
   .600                                                     -.2413
   .637             -.1154
   .650                                             -.2258
   .670                                                             -.2985
   .700                                     -.2509
   .725                             -.2207
   .750                                             -.4911  -.4577
   .760                     -.2440
   .775                             -.7220  -.3662
   798              -.2598
   .809                     -.53[illegible]
   .824     -.2230
   .829             -.3639
   .850                             -.3009  -.2530  -.3062
   .857                     -.2299
   .862                                                             -.1546
   .865     -.3884
   .879             -.2724
   .910     -.2405                  -.1854                  -.1602
   .915                     -.1981
   .919             -.2019
   .940                             -.0609  -.1297  -.0620
   .953                     -.0805
   .955             -.1121
   .985     -.2282
  1.000                      .0349           .0562           .0454

ALPHA ( 3) =    4.011    BETA  ( 5) =    8.279   MACH   =  .59696     Q      =  595.02     P      =  2385.3     RN/L   =  4.8897

 SECTION ( 1)LEFT WING BOT SURF            DEPENDENT VARIABLE CP

2Y/BW        .2990   .3640   .4270   .5340   .6730   .7800   .8870   .9720

  X/CW
   .010     -.3990  -.3626   .0950   .2487   .1911   .2230   .2068
   .020      .0000  -.1906   .1839   .1324   .1396   .1343   .1055  -.4075
   .040             -.1253   .1711
   .050     -.1329                   .0877   .0718   .0480   .0230
   .063                                                             -.3406
   .080                              .0455
```

AMES 11-073(OA148) -140A/B/C/R ORB LEFT WING BOT (XEBL55)

ALPHA (3) = 4.011 BETA (5) = 8.279

SECTION (1)LEFT WING BOT SURF DEPENDENT VARIABLE CP

2Y/BW	.2930	.3540	.4270	.5340	.6730	.7800	.8870	.9720
X/CW								
[illegible]			.0962					
[illegible]		.0548						
[illegible]	-.0740							
[illegible]				.0141	.0215	.0074	-.0525	
[illegible]								-.2493
[illegible]		.1336						
[illegible]			.0399					
[illegible]	.0042							
[illegible]		.0244						
.250				-.0045	-.0194	-.0431	-.0901	
[illegible]			.0075					
[illegible]								-.2363
.300		.0067						
[illegible]				-.0486	-.0572		-.1230	
[illegible]			-.0207					
[illegible]								-.2719
.550				-.1182	-.1393			
.565			-.2817					
[illegible]							-.2368	
[illegible]		-.1159						
[illegible]						-.2210		
[illegible]								-.2932
[illegible]					-.2404			
[illegible]				-.2160				
[illegible]						-.4619	-.4416	
[illegible]			-.2462					
[illegible]				-.6907	-.3420			
[illegible]		-.2515						
[illegible]			-.4993					
[illegible]	-.2233							
[illegible]		-.3567						
[illegible]				-.2288	-.2249	-.3010		
[illegible]			-.2933					
[illegible]								-.1428
.865	-.3992							
[illegible]		-.2767						
.900	-.2611			-.1761			-.1459	
[illegible]			-. 397					
[illegible]		-.2111						
[illegible]				-.0580	-.0944	-.0570		
[illegible]			-.0904					
.955		-.1238						
[illegible]	-.2519							
1.000			.0251		.0570		.0284	

DATE 10 FEB 76

TABULATED PRESSURE DATA - OA148 (AMES 11-073-1)

AMES 11-073(OA148) -140A/B/C/R ORB LEFT WING BOT (XEBL56)

ALPHA (4) = 8.004 BETA (1) = -7.303 MACH = .59678 Q = 594.78 P = 2385.7 RN/L = 4.8929

SECTION (1)LEFT WING BOT SURF

DEPENDENT VARIABLE CP

2Y/BW	.2590	.3640	.4270	.5340	.6730	.7800	.8870	.9720
X/CW								
.010	-.0148	-.0514	.4112	.4634	.4767	.5557	.5324	
.020	.0000	.1091	.4342	.3334	.3935	.4177	.4334	-.1883
.040		.1662	.3112					
.050	.1037			.2239	.2598	.2784	.2931	
.069								-.1000
.080				.1687				
.091			.1958					
[illegible]		.2590						
.094	.1114							
[illegible]				.1368	.1572	.1731	.1293	
.157								-.1353
.163		.2455						
[illegible]			.1322					
[illegible]	.1392							
[illegible]		.1183						
[illegible]				.1107	.0994	.0961	.0607	
[illegible]			.0934					
[illegible]								-.0905
.300		.0893						
.400				.0478	.0425		-.0058	
.402			.0712					
.503								-.1892
[illegible]				-.0534	-.0664			
[illegible]			-.3229					
[illegible]							-.1864	
.637		-.0604						
[illegible]						-.1716		
.670								-.2781
.700					-.2049			
.725				-.1690				
.750						-.4799	-.3987	
[illegible]			-.1929					
.775				-.6424	-.3416			
[illegible]		-.2101						
[illegible]			-.5190					
[illegible]	-.1370							
[illegible]		-.3247						
.850				-.2853	-.26[illegible]	-.2636		
[illegible]			-.2388					
[illegible]								-.2191
[illegible]	-.3479							
[illegible]		-.2134						
[illegible]	-.1313			-.1792			-.2041	
[illegible]			-.1474					
.919		-.1348						

```
DATE 10 FEB 76            TABULATED PRESSURE DATA - OA148 ( AMES 11-073-1 )                                      PAGE 2532

                                     AMES 11-073(OA148) -140A/B/C/R ORB LEFT WING BOT               (XEBL56)

ALPHA ( 4) =    8.004    BETA  ( 1) =    -7.903

 SECTION ( 1)LEFT WING BOT SURF              DEPENDENT VARIABLE CP

2Y/BW          .2990   .3640   .4270   .5340   .6730   .7800   .8870   .9720

  X/CW
     .950                             -.0560  -.1993  -.0573
     .953                     -.0432
     .955             -.0444
     .965     -.0549
    1.000                      .0674           .0530           .0129

ALPHA ( 4) =    8.017    BETA  ( 2) =    -3.872    MACH   =  .59678     Q      =  594.78     P      =  2385.7     RN/L   =  4.8929

 SECTION ( 1)LEFT WING BOT SURF              DEPENDENT VARIABLE CP

2Y/BW          .2990   .3640   .4270   .5340   .6730   .7800   .8870   .9720

  X/CW
     .010     -.1631  -.2745   .2915   .4682   .4594   .5082   .4735
     .020      .0000  -.0250   .3792   .3520   .3903   .4073   .4041  -.3747
     .040              .0513   .3202
     .050      .0331                   .2454   .2647   .2801   .2812
     .063                                                             -.2377
     .080                              .1951
     .091                      .2127
     .096              .2183
     .134      .0677
     .150                              .1420   .1601   .1633   .1085
     .157                                                             -.1759
     .163              .2492
     .177                      .1407
     .229      .1185
     .246              .1255
     .250                              .1095   .0970   .0876   .0443
     .274                      .1060
     .345                                                             -.1444
     .390              .0943
     .400                              .0456   .0363          -.0245
     .412                      .0718
     .503                                                             -.2344
     .550                             -.0559  -.0741
     .566                     -.2911
     .600                                                     -.2001
     .627             -.0576
     .650                                             -.1793
     .670                                                             -.3046
     .700                                     -.2102
     .735                             -.1771
     .750                                             -.4736  -.4171
     .760                     -.2004
```

AMES 11-073(OA148) -140A/B/C/R ORB LEFT WING BOT (XEBL56)

ALPHA (4) = 8.017 BETA (2) = -3.872

SECTION (1)LEFT WING BOT SURF DEPENDENT VARIABLE CP

2Y/BW	.2990	.3640	.4270	.5340	.6730	.7800	.8870	.9720
X/CW								
.775				-.6659	-.3382			
.798		-.2189						
.808			-.5151					
.834	-.1913							
.839		-.3294						
.840				-.2976	-.2577	-.2830		
.857			-.2633					
.862								-.2289
.865	-.3545							
.879		-.2316						
.900	-.1635			-.1876			-.2062	
.914			-.1719					
.917		-.1515						
[illegible]				-.0626	-.1916	-.0651		
[illegible]			-.0595					
.965		-.0599						
.985	-.1119							
1.000			.0535		.0730		.0113	

ALPHA (4) = 7.985 BETA (3) = .169 MACH = .59678 Q = 594.78 P = 2385.7 RN/L = 4.8929

SECTION (1)LEFT WING BOT SURF DEPENDENT VARIABLE CP

2Y/BW	.2990	.3640	.4270	.5340	.6730	.7800	.8870	.9720
X/CW								
.010	-.3592	-.5309	.1370	.4412	.4225	.4349	.3923	
.020	.0000	-.1960	.2908	.3527	.3749	.3768	.3531	-.5682
.040		-.0391	.3008					
.050	-.0556			.2528	.2637	.2591	.2499	
.063								-.3958
.080				.1921				
.081			.2141					
.086		.1514						
.094	.0078							
.150				.1396	.1536	.1552	.0869	
.157								-.2242
.163		.2394						
.177			.1401					
.183	.0840							
[illegible]		.1215						
[illegible]				.1017	.0964	.0779	.0174	
[illegible]			.1005					
[illegible]								-.2185
[illegible]		.0943						

```
                                AMES 11-073(OA148) -140A/B/C/R ORB LEFT WING BOT          (XEBLES)

ALPHA ( 4) =    7.965    BETA  ( 3) =     .166

 SECTION ( 1)LEFT WING BOT SURF              DEPENDENT VARIABLE CP

2Y/BW        .2990    .3640    .4270    .5340    .6730    .7800    .8870    .9720

  X/CW
   .400                                  .0372    .0315             -.0437
   .402                         .0633
   .503                                                                      -.2830
[illegible]                             -.0620   -.0789
[illegible]                    -.2759
[illegible]                                                         -.2143
[illegible]           -.0566
[illegible]                                               -.1936
   .571                                                                      -.3293
   .700                                           -.2139
   .725                                  -.1835
   .750                                                    -.4664   -.4328
[illegible]                    -.2118
   .775                                  -.6775   -.3254
   .795           -.2213
   .808                         -.5076
   .834  -.1961
   .839           -.3324
   .850                                  -.2906   -.2517   -.2981
   .857                         -.2701
   .862                                                                      -.2397
   .865  -.3613
   .873           -.2452
[illegible] -.1952                       -.1847                     -.1959
[illegible]                     -.1841
   .917           -.1793
   .940                                  -.0658   -.1512   -.0578
[illegible]                     -.0739
[illegible]       -.0280
[illegible] -.1767
  1.000                         .0413             .0653             .0080
ALPHA ( 4) =    7.931    BETA  ( 4) =    4.229   MACH    =  .59678     Q      =  594.78     P      =  2385.7     RN/L    = [illegible]

 SECTION ( 1)LEFT WING BOT SURF              DEPENDENT VARIABLE CP

2Y/BW        .2990    .3640    .4270    .5340    .6730    .7800    .8870    .9720

  X/CW
   .010  -.5472  [illegible] -.0518    .3814    .3789  [illegible] .2902
   .020 [illegible] [illegible] .1570  .3342    .3421  [illegible] .2991   -.8354
   .040           -.2331    .2552
   .050  -.1549                        .2514    .2682    .2325    .2271
   .060                                                                      -.5657
   .080                                .1894
```

AMES 11-073(OA148) -140A/B/C/R ORB LEFT WING BOT (XE8L56)

ALPHA (4) = 7.931 BETA (4) = 4.229

SECTION (1)LEFT WING BOT SURF DEPENDENT VARIABLE CP

2Y/BW	.2990	.3640	.4270	.5340	.6730	.7800	.8870	.9720
X/CW								
.081			.2003					
.096		.0722						
.134	-.0603							
.150				.1340	.1544	.1457	.0727	
.157								-.2948
[illegible]		.2104						
[illegible]			.1385					
[illegible]	0441							
[illegible]		.1119						
[illegible]				.0957	.0959	.0699	.0078	
[illegible]			.1029					
[illegible]								-.2905
[illegible]		.0899						
[illegible]				.0302	.0209		-.0695	
[illegible]			.0570					
[illegible]								-.3397
[illegible]				-.0609	-.0803			
[illegible]			-.2805					
[illegible]							-.2235	
[illegible]		-.0545						
[illegible]						-.1885		
[illegible]								-.3505
[illegible]					-.2010			
.725				-.1818				
[illegible]						-.4514	-.4321	
.76			-.2171					
.775				-.6631	-.2829			
[illegible]		-.2295						
[illegible]			-.4734					
.834	-.1950							
[illegible]		-.3361						
[illegible]				-.2798	-.2361	-.3052		
[illegible]			-.2720					
[illegible]								-.2453
[illegible]	-.3647							
[illegible]		-.2544						
[illegible]	-.2231			-.1806			-.1951	
[illegible]			-.1855					
[illegible]		-.1917						
[illegible]				-.0683	-.1441	-.0872		
[illegible]			-.0853					
[illegible]		-.1116						
[illegible]	-.1133							
1.000			.0390		.0225		.0012	

AMES 11-073(OA148) -140A/B/C/R ORB LEFT W' G GC (XEBL56)

ALPHA (4) = 7.987 BETA (5) = 8.286 MACH = .59678 Q = 594.78 P = 2365.7 RN/L = 4.8929

SECTION (1)LEFT WING BOT SURF DEPENDENT VARIABLE CP

2Y/BW	.2990	.3640	.4270	.5340	.6730	.7800	.8870	.9720
X/CW								
.010	-.7553	-.6430	-.2726	.2855	.2876	.2097	.1600	
.020	.0000	-.4335	-.0110	.2892	.2891	.2803	.2185	-1.0795
.040		-.3341	.1829					
.050	-.2678			.2361	.2472	.2218	.1841	
.059								-.7458
.060				.1810				
.081			.1784					
.086		-.0120						
.094	-.1499							
.150				.1234	.1339	.1289	.0370	
.157								-.3708
.163		.1683						
.177			.1321					
.229	-.0026							
.246		.0954						
.250				.0821	.0740	.0557	-.0186	
.274			.0930					
.345								-.3631
.390		.0831						
.400				.0216	.0081		-.0902	
.402			.0476					
.503								-.3813
.550				-.0704	-.0933			
.555			-.3035					
.600							-.2285	
.647		-.0533						
.650						-.1980		
.670								-.3763
.700					-.2210			
.725				-.1897				
.750						-.4513	-.4429	
.760			-.2209					
.775				-.6736	-.3145			
.798		-.2333						
.808			-.4622					
.824	-.2028							
.839		-.3435						
.850				-.2798	-.2020	-.3086		
.857			-.2831					
.862								-.2384
.865	-.3730							
.879		-.2558						
.900	-.2332			-.1935			-.1831	
.905			-.1929					
.919		-.2127						

REPRODUCIBILITY OF THE
ORIGINAL PAGE IS POOR

```
DATE 10 FEB 76               TABULATED PRESSURE DATA - OA148 ( AMES 11-073-1 )                                        PAGE 2537

                                      AMES 11-073(OA148) -140A/B/C/R ORB LEFT WING BOT                    (XEBL56)

ALPHA ( 4) =     7.987    BETA  ( 5) =     8.286

 SECTION ( 1)LEFT WING BOT SURF                DEPENDENT VARIABLE CP

2Y/BW         .2990   .3640   .4270   .5340   .6730   .7800   .8870   .9720

  X/CW
    .950                              -.0894  -.1152  -.0961
    .953                      -.0935
    .955              -.1268
    .965      -.2417
   1.000                       .0415           .0235           .0159

ALPHA ( 5) =    11.920    BETA  ( 1) =    -7.857   MACH   =  .59670     Q      =  594.67     P      =  2385.8     RN/L   =  4.8946

 SECTION ( 1)LEFT WING BOT SURF                DEPENDENT VARIABLE CP

2Y/BW         .2990   .3640   .4270   .5340   .6730   .7800   .8870   .9720

  X/CW
    .010     -.2895  -.6210   .1631   .5974   .6001   .5388   .4737
    .020      .0000  -.1509   .3948   .5591   .5874   .5815   .5383  -.7033
    .040             -.0264   .4547
    .050      .0625                   .4478   .4802   .4862   .4676
    .069                                                              -.3713
    .080                              .3691
    .081                      .3642
    .086              .2691
    .094      .1226
    .150                              .2888   .3221   .3263   .2630
    .157                                                              -.1940
    .163              .3629
    .177                      .2704
    .229      .1950
    .245              .2459
    .250                              .2335   .2276   .2268   .1708
    .274                      .2214
    .345                                                              -.1060
    .390              .1952
    .400                              .1495   .1426           .0739
    .402                      .1664
    .503                                                              -.2168
    .550                              .0266   .0154
    .595                     -.3233
    .600                                                     -.1403
    .637              .0198
    .650                                              -.1214
    .670                                                              -.2862
    .700                                      -.1408
    .725                             -.1194
    .750                                              -.4275  -.3576
    .760                     -.1624
```

AMES 11-073(OA148) -140A/B/C/R ORB LEFT WING BOT (XEBL56)

ALPHA (5) = 11.920 BETA (1) = -7.867

SECTION (1)LEFT WING BOT SURF DEPENDENT VARIABLE CP

2Y/BW	.2990	.3640	.4270	.5340	.6730	.7800	.8870	.9720
X/CW								
.775				-.5658	-.2252			
.798		-.1708						
.808			-.4491					
.834	-.1550							
.839		-.2851						
.850				-.2510	-.2383	-.2676		
.857			-.2179					
.862								-.2904
.865	-.3012							
.879		-.1888						
.990	-.0923			-.1760			-.2465	
.905			-.1473					
.919		-.1251						
.950				-.0701	-.1676	-.0883		
.953			-.0485					
.955		-.0481						
.965	-.0662							
1.000			.0596		-.0041		-.1086	

ALPHA (5) = 11.942 BETA (2) = -3.850 MACH = .59670 Q = 594.67 P = 2385.8 RN/L = 4.8946

SECTION (1)LEFT WING BOT SURF DEPENDENT VARIABLE CP

2Y/BW	.2990	.3640	.4270	.5340	.6730	.7800	.8870	.9720
X/CW								
.010	-.5262	-.8773	-.0649	.5036	.5068	.3946	.3378	
.020	.0000	-.3311	.2446	.5132	.5289	.5144	.4456	-.9412
.040		-.1883	.3975					
.050	-.0442			.4325	.4587	.4490	.4143	
.063								-.5496
.080				.3558				
.081			.3433					
.086		.1834						
.094	.0516							
.150				.2762	.3072	.3118	.2297	
.157								-.2617
.163		.3374						
.177			.2648					
.229	.1545							
.245		.2318						
.250				.2213	.2163	.2041	.1400	
.274			.2093					
.295								-.1948
.300		.1922						

```
                              AMES 11-073(OA148) -140A/B/C/R ORB LEFT WING BOT              (XE8L56)

ALPHA ( 5) =   11.942    BETA  ( 2) =   -3.850

 SECTION ( 1)LEFT WING BOT SURF             DEPENDENT VARIABLE CP

2Y/BW        .2990   .3640   .4270   .5340   .6730   .7800   .8870   .9720

  X/CW
    .400                              .1354   .1300            .0434
    .402                      .1589
    .503                                                               -.2866
    .550                              .0180   .0001
    .565                     -.2860
    .600                                                      -.1670
    .637              .0146
    .650                                              -.1387
    .670                                                               -.3255
    .700                                     -.1606
    .725                             -.1332
    .750                                              -.4296  -.3837
    .760                     -.1719
    .775                             -.6018  -.2488
    .798             -.1775
    .808                     -.4484
    .834    -.1570
    .839             -.2393
    .850                             -.2628  -.2269  -.2818
    .857                     -.2355
    .862                                                               -.2999
    .865    -.3204
    .879             -.2057
    .900    -.1298                   -.1831                   -.2345
    .905                     -.1681
    .919             -.1511
    .950                             -.0667  -.1768  -.0974
    .953                     -.0670
    .955             -.0765
    .965    -.1286
   1.000                      .0500           -.0053           -.0771
ALPHA ( 5) =   12.055    BETA  ( 3) =     .165   MACH   =  .59670     Q     =   594.67     P     =   2385.8     RN/L   =  4.8946

 SECTION ( 1)LEFT WING BOT SURF             DEPENDENT VARIABLE CP

2Y/BW        .2990   .3640   .4270   .5340   .6730   .7800   .8870   .9720

  X/CW
    .010    -.7847 -1.1102  -.3228   .3916   .3953   .2440   .1870
    .020     .0000  -.5244   .0660   .4485   .4537   .4252   .3409 -1.1780
    .040            -.3616   .3246
    .050    -.1519                   .3978   .4195   .4018   .3480
    .060                                                               -.7300
    .080                             .3357
```

AMES 11-073(OA148) -140A/B/C/R ORB LEFT WING BOT (XEBL56)

ALPHA (5) = 12.055 BETA (3) = .165

SECTION (1)LEFT WING BOT SURF DEPENDENT VARIABLE CP

2Y/BW	.2930	.3640	.4270	.5340	.6730	.7800	.8870	.9720
X/CW								
.081			.3173					
.086		.0813						
.094	-.0327							
.150				.2589	.2820	.2848	.1881	
.157								-.3245
.163		.2963						
.177			.2516					
.229	.1052							
.240		.2122						
.250				.2052	.1952	.1844	.1005	
.274			.1995					
.295								-.2727
.300		.1817						
.400				.1181	1117		.0081	
.402			.1415					
.503								-.3274
.550				.0062	-.0170			
.565			-.2917					
.600							-.1907	
.637		.0045						
.650						-.1587		
.679								-.3588
.700					-.1846			
.725				-.1532				
.750						-.4484	-.4038	
.760			-.1883					
.775				-.6350	-.2888			
.798		-.1890						
.805			-.4359					
.834	-.1683							
.839		-.3023						
.850				-.2684	-.2191	-.3142		
.857			-.2585					
.862								-.3090
.865	-.3328							
.873		-.2248						
.900	-.1619			-.1872			-.2442	
.905			-.1868					
.919		-.1791						
.950				-.0810	-.1511	-.1249		
.953			-.0905					
.965		-.1021						
.985	-.1859							
1.000			.0321		-.0109		-.0418	

AMES 11-073(OA148) -140A/B/C/R ORB LEFT WING BOT (XE8L56)

ALPHA (5) = 12.053 BETA (4) = 4.239 MACH = .59670 Q = 594.67 P = 2385.8 RN/L = 4.8948

SECTION (1)LEFT WING BOT SURF DEPENDENT VARIABLE CP

2Y/BW X/CW	.2990	.3640	.4270	.5340	.6730	.7800	.8870	.9720
.010	-.9923	-.9730	-.5297	.2426	.2558	.0533	.0026	
.020	.0000	-.6082	-.1025	.3584	.3612	.3167	.2208	-1.3519
.040		-.4634	.2304					
.050	-.2927			.3491	.3666	.3433	.2830	
.060								-.8498
.080				.2992				
.081			.2686					
.085		-.0116						
.094	-.1356							
.150				.2353	.2556	.2506	.1503	
.157								-.3419
.163		.2363						
.177			.2263					
.229	.0502							
.246		.1784						
.250				.1801	.1792	.1612	.0767	
.274			.1834					
.345								-.3088
.390		.1654						
.400				.1062	.0939		-.0167	
[illegible]			.1295					
.503								-.3606
.550				-.0042	-.0293			
.565			-.2963					
.600							-.2000	
.537		.0000						
.650						-.1711		
.670								-.3703
.700					-.1965			
.725				-.1639				
.750						-.4415	-.4076	
.760			-.1970					
.775				-.6494	-.2875			
.798		-.2014						
.808			-.4256					
.824	-.1776							
.843		-.3133						
.850				-.2799	-.2080	-.3242		
.857			-.2713					
.862								-.2898
.865	-.3404							
.879		-.2405						
.900	-.1878			-.2016			-.2499	
.905			-.1982					
.919		-.1922						

```
DATE 10 FEB 76            TABULATED PRESSURE DATA - OA148 ( AMES 11-073-1 )                                          PAGE 2542
                                     AMES 11-073(OA148) -140A/B/C/R ORB LEFT WING BOT                 (XE8L56)
ALPHA ( 5) =    12.053    BETA  ( 4) =     4.239
 SECTION ( 1)LEFT WING BOT SURF              DEPENDENT VARIABLE CP
2Y/BW          .2990   .3640   .4270   .5340   .6730   .7800   .8870   .9720
  X/CW
    .950                               -.1079  -.1335  -.1525
    .953                       -.1032
    .955               -.1142
    .965       -.2201
   1.000                        .0421          -.0011           -.0612
ALPHA ( 5) =    12.101    BETA  ( 5) =     8.299   MACH   =  .59670     Q     =  594.67     P     =  2385.8     RN/L   =  4.8946
 SECTION ( 1)LEFT WING BOT SURF              DEPENDENT VARIABLE CP
2Y/BW          .2990   .3640   .4270   .5340   .6730   .7800   .8870   .9720
  X/CW
    .010     -1.2438   -.7464  -.7730   .0805   .0898  -.1504  -.1764
    .020       .0000   -.6627  -.3051   .2501   .2432   .1899   .1002 -1.3301
    .040               -.5433   .1232
    .060      -.4335                    .2896   .3100   .2709   .2088
    .069                                                                -.9149
    .080                                .2615
    .081                        .2200
    .086               -.1020
    .094      -.2314
    .150                                .2027   .2239   .2159   .1178
    .157                                                                -.3912
    .163                .1809
    .177                        .2070
    .229       .0001
    .246                .1408
    .250                                .1576   .1547   .1397   .0476
    .274                        .1699
    .345                                                                -.3420
    .393                .1467
    .400                                .0879   .0745           -.0392
    .422                        .1134
    .533                                                                -.3765
    .550                               -.0144  -.0381
    .565                       -.3298
    .600                                                       -.2126
    .637               -.0024
    .650                                               -.1870
    .670                                                                -.3662
    .700                                       -.2166
    .725                               -.1758
    .750                                               -.4507  -.4016
    .760                       -.2108
```

```
DATE 10 FEB 76            TABULATED PRESSURE DATA - OA148 ( AMES 11-073-1 )                                        PAGE 2543

                                      AMES 11-073(OA148) -140A/B/C/R CRB LEFT WING BOT                  (XEBL56)
ALPHA ( 5) =    12.101    BETA  ( 5) =     8.299

 SECTION ( 1)LEFT WING BOT SURF                  DEPENDENT VARIABLE CP

2Y/BW        .2990    .3640    .4270    .5340    .6730    .7800    .8870    .9720

  X/CW
   .775                                 -.6597   -.2838
   .798              -.2061
   .808                       -.4069
   .834     -.1845
   .839              -.3079
   .850                                 -.2746   -.1999   -.3293
   .857                       -.2688
   .862                                                                     -.2977
   .865     -.3333
   .879              -.2451
   .900     -.2082                      -.2138                     -.2552
   .905                       -.1980
   .919              -.1987
   .950                                 -.1248   -.1159   -.1464
   .953                       -.1031
   .955              -.1241
   .965     -.2345
  1.000                        .0420             -.0280            -.0823
```